Semiconductor / High Purity Products

Weld & Metal Seal Fittings | Tube & Pipe Fittings
Valve Series | Ball Valve Series | Regulator Series
MGC | Gas Filters | IGS | MFC | PT Sensor | Canister

General Industrial Products

Valve Series | Fitting Series

TKF PRODUCTS

TK-FUJIKIN CORPORATION
Fujikin Carp Group

SEMICONDUCTOR HIGH PURITY PRODUCTS

SEMI / FPD, SEMICONDUCTOR EQUIPMENT

As the specialized company in the field of the components & materials industry, TK-FUJIKIN has been firmly establishing the high reputation around the world and recognized with the high technical skills by being designated as the official supplier to the world-class semiconductor companies such as Samsung electronics, LG Display and SK-Hynix. In addition, the technological leadership via the continuous investment on R&D and strict quality control will allow us to provide the customers with the upmost service and satisfaction. Based on our efforts, we believe that TK-FUJIKIN will grow as a global corporate brand and eventually become the global leading company that leads the world technology

GENERAL INDUSTRIAL PRODUCTS

SHIP BUILDING, OCEAN / OIL GAS, PETROCHEMICALS, POWER PLANT

TK-FUJIKIN has been produced high quality products such as Fittings and Valves applying to nuclear power, thermal power, petrochemicals, marine and shipbuilding industry with automation equipment system TK-FUJIKIN acquired KEPIC certification through maintaining a quality assurance qualification required in the Electric Power Industry and acquired ASME certification related with nuclear power industry. TK-FUJIKIN has been recognized with reliable product supply and always tried to improve quality.

TK-FUJIKIN

Semiconductor / High Purity Products
General Industrial Valve & Fittings

Head Office

7, Noksansandan 261-ro 88beon-gil, Gangseo-gu, Busan, Korea

2nd Factory

32, Hwajeonsandan 3-ro, Gangseo-gu, Busan, Korea

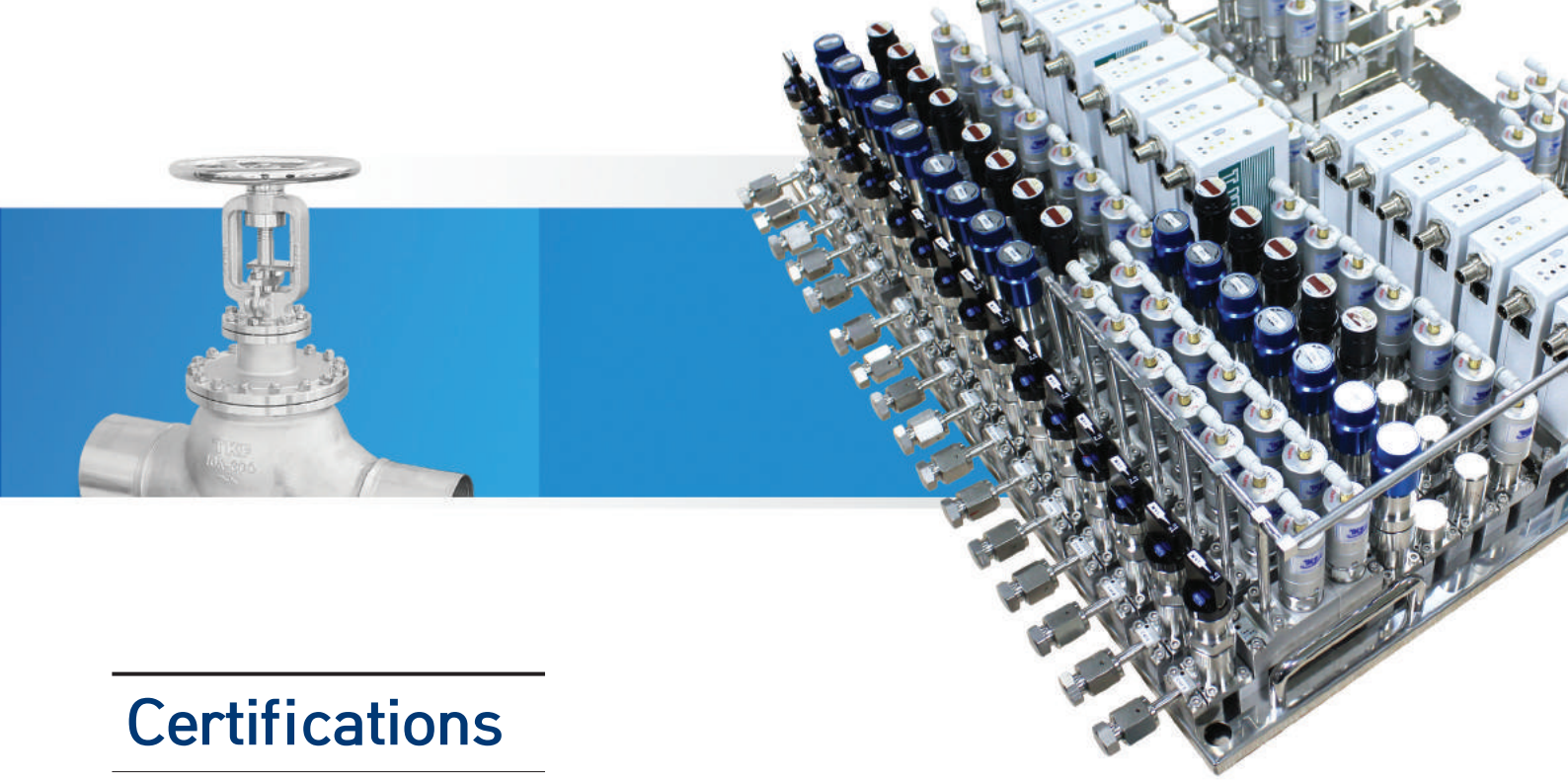

Certifications


● OHSAS18001:2007


● ISO14001:2004


● ISO9001:2008


● ISO/TS16949:2009


● TSGD


● TSGD


● BV


● ASME NPT


● ASME N


● KEPIC


● ABS


● CE - Digital Indicator


● CE - PT Sensor 3


● CE - PT Sensor 2


● CE - PT Sensor 1


● KR TA


● DNV.GL TA


● NK TA


● BV TA


● 한수원 유자격공급자 등록증(J240)


● 한수원 유자격공급자 등록증(235Q)


● LR TA


● EIL


● ABS

● Applied Material (Fitting)


● Applied Material (Valve)

TKF Ultra High Purity Products

Contents

TKF General Industrial Products

ULTRA HIGH PURITY PRODUCTS

FITTING SERIES

Weld & Metal Seal Fittings

Tube & Pipe Fittings

CGA Series (Cylinder Connection)

Weld & Metal Seal Fittings

Weld Fittings / Metal Face Seal Fittings

TK-FUJIKIN CORPORATION

Fujikin Carp Group

INDEX

HANDLING

Damage to the sealing beads may affect the fitting performance.
A protective cap is placed on all Metal Face Seal Fitting sealing beads to prevent nicks or scratches.
Keep this cap in place during storage and handling and only remove prior to assembly.

<Retainer Assembly>

Step 1.
When using a gasket retainer assembly, axially press the assembly onto the gland as shown. The retainer assembly will locate the gasket over the bead and hold it in place. Be careful not to scratch or nick the bead as this may affect fitting performance.

Proceed to Step 2.

<Non - Retainer Assembly>

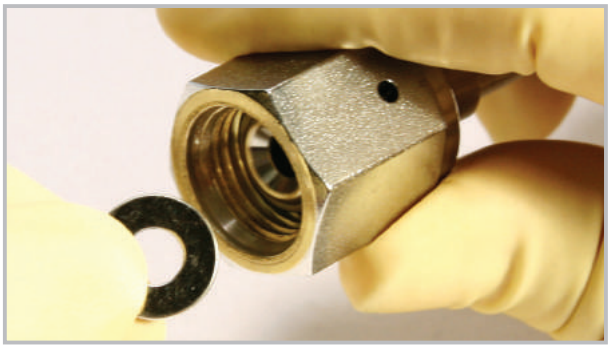

Step 1. Place gasket into female nut.

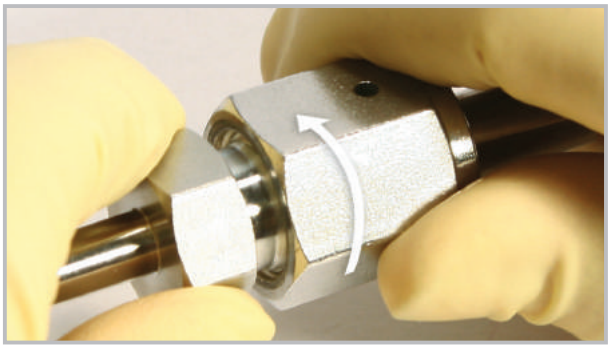

Step 2. Assemble components and snug to fingertight.

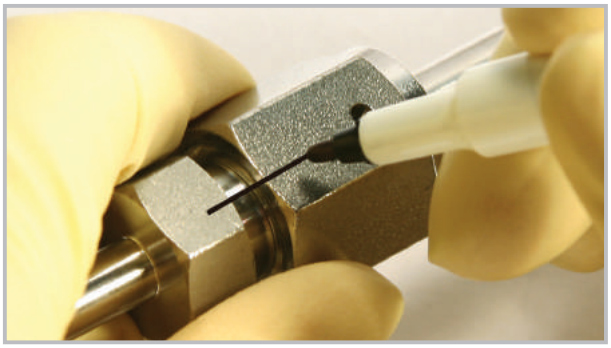

Step 3.
Scribe the hex flat of both the male and female

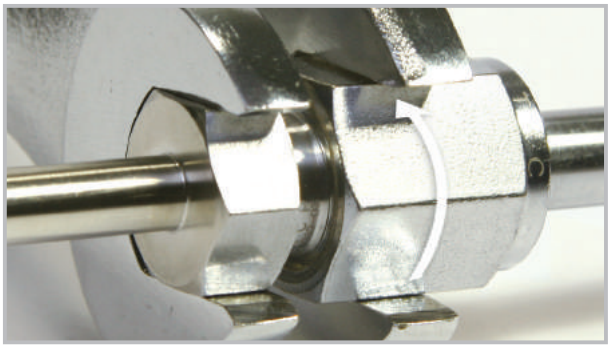

Step 4.
Holding the backup wrench stationary, tighten the female nut 1/8 turn past fingertight.
Warning : Extreme over tightening will damage toroid surface and cause potential leakage.

<Non - Retainer Assembly>

Protective Cap
Removing Face Seal in an assembled system requires minimal clearance. To disassemble a face seal connection, hold the male nut or body hex stationary with a backup wrench and loosen the female nut. After removing the components, be sure to protect the sealing beads with protective caps or gasket retainer assemblies.

TBW AND METAL FACE SEAL FITTINGS

components are ordered by product code as listed in this catalogue

ORDERING INFORMATION

S	4	E	6	—	P
Material	Size	Product	Sleeve Length		Inner Surface Level

Material	Size	Sleeve Length	Inner Surface Level
S : 316L Stainless Steel	4 : 1/4"	6 : 6.35mm	BLANK : BA
D : 316L Stainless Steel Remelted	6 : 3/8"	10 : 10mm	P : EP
	8 : 1/2"	19 : 19.05mm	
	12 : 3/4"		
	16 : 1"		

Product			
E	Elbow	BLG	Blind Gland
T	Tee	MG	Male Weld Gland
CT	Cross	TA	Tube Adapter
TB	Tribow	BH	Bulkhead Union
R	Reducer	UC	Union Cross
FN	Female Nut	MC	Male Connector
MN	Male Nut	FC	Female Connector
CP	Cap	ME	Male Elbow
PG	Plug	UT	Union Tee
GT	Gasket	MU	Double Male Union
GB	Blind Gasket	FU	Double Female Union
GR	Gasket Retainer Assembly	UE	Union Elbow
SG	Female Gland	MCK	Tube Fitting Connector
ASG	Automatic Female Gland	BHCK	Tube Fitting Bulkhead Connector
SWSG	Socket Weld Short Gland	BHC	Male Bulkhead Connector
LG	Male Gland	CG	Coupling
ALG	Automatic Male Gland	RA	Reducing Adapter
SWLG	Socket Weld Long Gland	RB	Reducing Bushing
HLG	H-MFS Male Gland	HBY	H-MFS Tbw Body
HFN	H-MFS Female Nut	HABY	H-MFS Abw Body
HMN	H-MFS Male Nut	HBHY	H-MFS Bulkhead Connector

WELD FITTINGS

MICRO WELD FITTINGS / FORGED WELD FITTINGS

FEATURES

- 316L Material
- Permanently Heat code marked; traceable to original mill certificate of test.
- Electropolished components permanently marked with designator on cube(P or PX)
- Critical surfaces are 100% visually inspected using magnification and lighting.

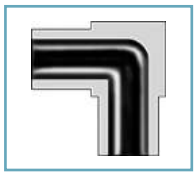

MATERIALS

Stainless Steel standards are in comliance with the below codes.
JIS G4303 / G3214 / G5121 / G3459 / G3463
ASTM A479 / A276 / A182 / A351 / A312 / A269
“Stainless Steel Remelted” is made of VAR(Vacuum Arc Remelting) material.

SPECIFICATIONS

Pressure Ratings will be governed by the tubing selected for a particular application. Working Pressures are calculated below for tubing using maximum allowable stress levels in accordance with ASME/ANSI B31.3, at ambient temperature.

- Dimensions are for reference only and are subject to change.
- Internal Surface Finishes: Standard finish Micro Fittings have an internal Surface Roughness of 3.0μm Ry / 10μin Ra.
- Electropolished Micro Fittings have an internal Surface Roughness of 0.7μm Ry / 5μin Ra.

Tube O.D.	Pressure Rating		Normal Wall Thickness
	psig	kgf/cm²	
1/4in.	5100	358	1mm
3/8in.	3300	232	1mm
1/2in.	3500	246	1.24mm

Designator	Surface Finish(Ry)	Surface Finish(Ra)
	Maximum	Maximum
EP	0.7μm	5μinch
BA	3.0μm	10μinch

MICRO WELD FITTINGS

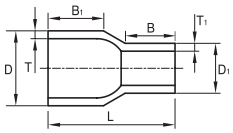

MICRO REDUCER

Size (OD)	Size (OD_1)	Ordering Number	D	D_1	T	T1	B	B_1	L
3/8"	1/4"	□6 x 4R6	9.53	6.35	1.00	1.00	6.35	10.4	19.1
1/2"	1/4"	□8 x 4R6	12.70	6.35	1.24	1.00	6.35	10.4	19.1
1/2"	3/8"	□8 x 6R6	12.70	9.53	1.24	1.00	6.35	10.4	19.1
3/4"	1/4"	□12 x 4R6	19.05	6.35	1.65	1.00	6.35	10.4	19.1
3/4"	3/8"	□12 x 6R6	19.05	9.53	1.65	1.00	6.35	10.4	19.1
3/4"	1/2"	□12 x 8R6	19.05	12.70	1.65	1.24	6.35	10.4	19.1

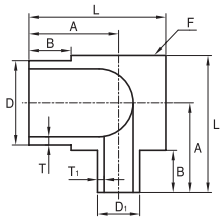

MICRO REDUCING 90° ELBOW

Size (OD)	Size (OD_1)	Ordering Number	D	D_1	T	T_1	A	B	F Body Cube	L
3/8"	1/4"	□6 x 4E6	9.53	6.35	1.00	1.00	11.91	6.35	11.11	17.46
1/2"	1/4"	□8 x 4E6	12.70	6.35	1.24	1.00	13.50	6.35	14.29	20.64
1/2"	3/8"	□8 x 6E6	12.70	9.53	1.24	1.00	13.50	6.35	14.29	20.64
3/4"	1/4"	□12 x 4E6	19.05	6.35	1.65	1.00	16.68	6.35	20.65	27.00
3/4"	3/8"	□12 x 6E6	19.05	9.53	1.65	1.00	16.68	6.35	20.65	27.00
3/4"	1/2"	□12 x 8E6	19.05	12.70	1.65	1.24	16.68	6.35	20.65	27.00

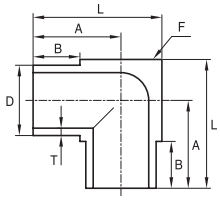

MICRO 90° ELBOW

Size (OD)	Ordering Number	D	T	A	B	F Body Cube	L
1/4"	□4E6	6.35	1.00	10.32	6.35	7.94	14.29
3/8"	□6E6	9.53	1.00	11.91	6.35	11.11	17.46
1/2"	□8E6	12.70	1.24	13.50	6.35	14.29	20.64
3/4"	□12E6	19.05	1.65	16.68	6.35	20.65	27.00

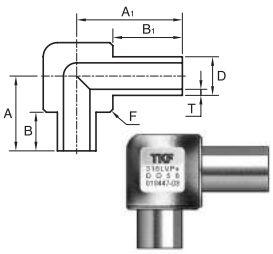

MICRO EXTENDED LEG 90° ELBOW

Size (OD)	Ordering Number	D	T	A	A_1	B	B_1	F Body Cube
1/4"	□4EX11	6.35	1.00	12.30	17.38	6.35	11.43	11.11

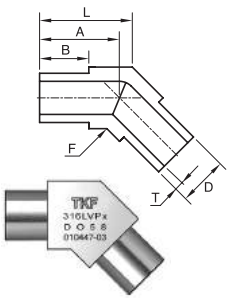

MICRO 45° ELBOW

Size (OD)	Ordering Number	D	T	A	B	F Body Cube	L
1/4"	□4HE6	6.35	1.00	10.32	6.35	7.94	11.96
3/8"	□6HE6	9.53	1.00	11.91	6.35	11.11	14.21
1/2"	□8HE6	12.70	1.24	13.50	6.35	14.29	16.46
3/4"	□12HE6	19.05	1.65	16.68	6.35	20.65	20.95

• Dimensions are for reference only and are subject to change.

WELD & METAL SEAL FITTINGS |

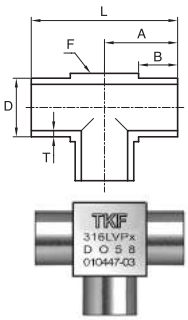

MICRO TEE

Size (OD)	Ordering Number	D	T	A	B	F Body Cube	L
1/4"	□4T6	6.35	1.00	10.32	6.35	7.94	20.64
3/8"	□6T6	9.53	1.00	11.91	6.35	11.11	23.81
1/2"	□8T6	12.70	1.24	13.50	6.35	14.29	26.99
3/4"	□12T6	19.05	1.65	16.68	6.35	20.65	33.35

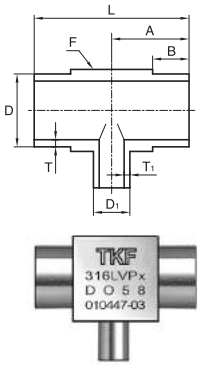

MICRO REDUCING TEE

Size (OD)	Size (OD_1)	Ordering Number	D	D_1	T	T_1	A	B	F Body Cube	L
3/8"	1/4"	□6 x 4T6	9.53	6.35	1.00	1.00	11.91	6.35	11.11	23.81
1/2"	1/4"	□8 x 4T6	12.70	6.35	1.24	1.00	13.50	6.35	14.29	26.99
1/2"	3/8"	□8 x 6T6	12.70	9.53	1.24	1.00	13.50	6.35	14.29	26.99
3/4"	1/4"	□12 x 4T6	19.05	6.35	1.65	1.00	16.68	6.35	20.65	27.00
3/4"	3/8"	□12 x 6T6	19.05	9.53	1.65	1.00	16.68	6.35	20.65	27.00
3/4"	1/2"	□12 x 8T6	19.05	12.70	1.65	1.24	16.68	6.35	20.65	27.00

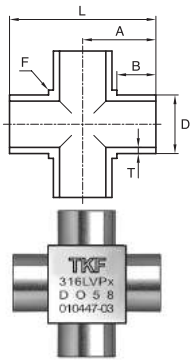

MICRO CROSS

Size (OD)	Ordering Number	D	T	A	B	F Body Cube	L
1/4"	□4CT6	6.35	1.00	10.32	6.35	7.94	20.64
3/8"	□6CT6	9.53	1.00	11.91	6.35	11.11	23.81
1/2"	□8CT6	12.70	1.24	13.50	6.35	14.29	26.99
3/4"	□12CT6	19.05	1.65	16.68	6.35	20.65	33.35

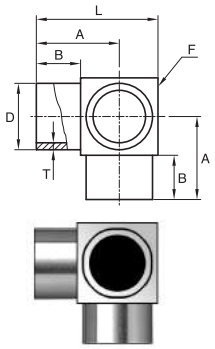

MICRO TRIBOW

Size (OD)	Ordering Number	D	T	A	B	F Body Cube	L
1/4"	□4TB6	6.35	1.00	10.32	6.35	7.94	14.29
3/8"	□6TB6	9.53	1.00	11.91	6.35	11.11	17.46
1/2"	□8TB6	12.70	1.24	13.50	6.35	14.29	20.64
3/4"	□12TB6	19.05	1.65	16.68	6.35	20.65	27.00

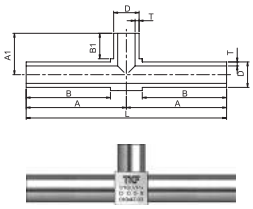

MICRO EXTENDED RUN TEE

Size (OD)	Ordering Number	D	T	B	A	L	B_1	A_1	F Body Cube
1/4"	□EXT50	6.35	1.00	21.05	25.00	50.00	6.35	10.32	7.94

• Dimensions are for reference only and are subject to change.

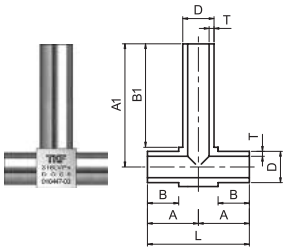

MICRO EXTENDED BRANCH LEG TEE

Size (OD)	Ordering Number	D	T	B	A	L	B_1	A_1	F Body Cube
1/4"	□EXT25	6.35	1.00	6.35	10.35	20.70	21.00	25.00	7.94

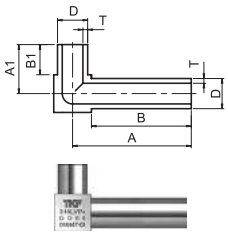

MICRO EXTENDED LEG 90° ELBOW

Size (OD)	Ordering Number	D	T	B	A	B_1	A_1	F Body Cube
1/4"	□EXE29	6.35	1.00	21.05	25.00	6.35	10.32	7.94

FORGED WELD FITTINGS

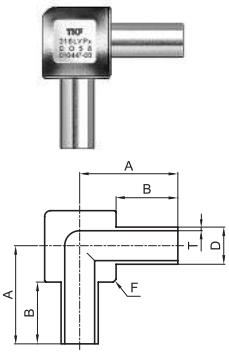

90° ELBOW

Size (OD)	Ordering Number	D	T	A	B	F Body Cube
1/4"	□4E19	6.35	1.00	25.0	19.05	11.1
3/8"	□6E19	9.53	1.00	25.0	19.05	11.1
1/2"	□8E19	12.70	1.24	29.0	19.05	17
1/4"	□4E10	6.35	1.00	15.9	10.00	11.1
3/8"	□6E10	9.53	1.00	15.9	10.00	11.1
1/2"	□8E10	12.70	1.24	19.9	10.00	17
3/4"	□12E10	19.05	1.65	22.4	10.00	25.0
3/4"	□12E22	19.05	1.65	33.5	22.5	25.0
1"	□16E23	25.4	1.65	38.5	23.3	30.0

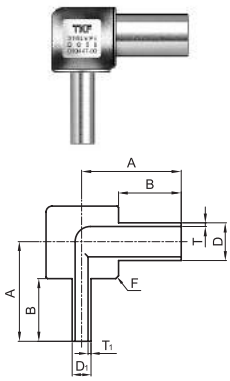

REDUCING 90° ELBOW

Size (OD)	Size (OD_1)	Ordering Number	D	D_1	T	T_1	B	A	F Body Cube
3/8"	1/4"	□6 x 4E19	9.53	6.35	1.00	1.00	19.05	25	11.1
1/2"	1/4"	□8 x 4E19	12.70	6.35	1.24	1.00	19.05	29	17
1/2"	3/8"	□8 x 6E19	12.70	9.53	1.24	1.00	19.05	29	17
3/4"	1/4"	□12 x 4E22	19.05	6.35	1.65	1.00	22.5	34	25.0
1"	1/2"	□16 x 8E23	25.4	12.7	1.65	1.24	23.3	38.3	30.0

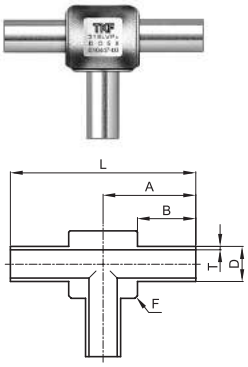

TEE

Size (OD)	Ordering Number	D	T	A	B	F Body Cube	L
1/4"	□4T19	6.35	1.00	25.0	19.05	11.1	50.0
3/8"	□6T19	9.53	1.00	25.0	19.05	11.1	50.0
1/2"	□8T19	12.70	1.24	29.0	19.05	17	58.0
1/4"	□4T10	6.35	1.00	15.9	10.00	11.1	31.8
3/8"	□6T10	9.53	1.00	15.9	10.00	11.1	31.8
1/2"	□8T10	12.70	1.24	19.9	10.00	17	39.8
3/4"	□12T10	19.05	1.65	22.4	10.00	25.0	44.8
3/4"	□12T22	19.05	1.65	33.5	22.5	25.0	67
1"	□16T23	25.4	1.65	38.3	23.3	30.0	76.6

• Dimensions are for reference only and are subject to change.

WELD & METAL SEAL FITTINGS |

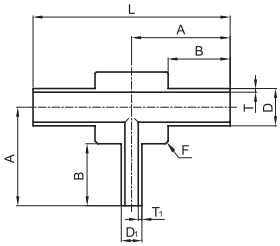

REDUCING TEE

Size (OD)	Size (OD_1)	Ordering Number	D	D_1	T	T_1	A	B	F Body Cube	L
3/8"	1/4"	□ 6 x 4T19	9.53	6.35	1.00	1.00	25.0	19.05	11.1	50.0
1/2"	1/4"	□ 8 x 4T19	12.70	6.35	1.24	1.00	29.0	19.05	17	58.0
1/2"	3/8"	□ 8 x 6T19	12.70	9.53	1.24	1.00	29.0	19.05	17	58.0
3/4"	1/4"	□12 x 4T22	19.05	6.35	1.65	1.00	33.5	22.5	25	67
3/4"	3/8"	□12 x 6T22	19.05	9.53	1.65	1.00	33.5	22.5	25	67
3/4"	1/2"	□12 x 8T22	19.05	12.7	1.65	1.24	33.5	22.5	25	67
1"	1/4"	□16 x 4T23	25.4	6.35	1.65	1.00	38.3	23.3	30	76.6
1"	1/2"	□16 x 8T23	25.4	12.7	1.65	1.24	38.3	23.3	30	76.6
3/8"	1/4"	□ 6 x 4T10	9.53	6.35	1.00	1.00	15.9	10.00	11.1	31.8
1/2"	1/4"	□ 8 x 4T10	12.70	6.35	1.24	1.00	19.9	10.00	17	39.8
1/2"	3/8"	□ 8 x 6T10	12.70	9.53	1.24	1.00	19.9	10.00	17	39.8
3/4"	1/4"	□12 x 4T10	19.05	6.35	1.65	1.00	22.4	10.00	25.0	44.8
3/4"	3/8"	□12 x 6T10	19.05	9.53	1.65	1.00	22.4	10.00	25.0	44.8

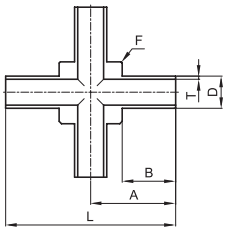

CROSS TEE

Size (OD)	Ordering Number	D	T	A	B	F Body Cube	L
1/4"	□4CT19	6.35	1.00	25.0	19.05	11.1	50.0
3/8"	□6CT19	9.53	1.00	25.0	19.05	11.1	50.0
1/2"	□8CT19	12.70	1.24	29.0	19.05	17	58.0
3/4"	□12CT19	19.05	1.65	31.5	19.05	25.0	63.0
1/4"	□4CT10	6.35	1.00	15.9	10.00	11.1	31.8
3/8"	□6CT10	9.53	1.00	15.9	10.00	11.1	31.8
1/2"	□8CT10	12.70	1.24	19.9	10.00	17	39.8
3/4"	□12CT10	19.05	1.65	22.4	10.00	25.0	44.8

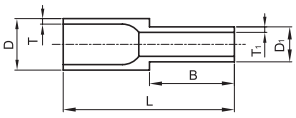

REDUCER

Size (OD)	Size (OD_1)	Ordering Number	D	D_1	T	T_1	B	L
3/8"	1/4"	□6 x 4R19	9.53	6.35	1.00	1.00	19.05	38.1
1/2"	1/4"	□8 x 4R19	12.70	6.35	1.24	1.00	19.05	38.1
1/2"	3/8"	□8 x 6R19	12.70	9.53	1.24	1.00	19.05	38.1
3/4"	1/4"	□12 x 4R19	19.05	6.35	1.65	1.00	19.05	42.9
3/4"	3/8"	□12 x 6R19	19.05	9.53	1.65	1.00	19.05	42.9
3/4"	1/2"	□12 x 8R19	19.05	12.70	1.65	1.24	19.05	42.9
3/8"	1/4"	□6 x 4R10	9.53	6.35	1.00	1.00	10.00	20.0
1/2"	1/4"	□8 x 4R10	12.70	6.35	1.24	1.00	10.00	20.0
1/2"	3/8"	□8 x 6R10	12.70	9.53	1.24	1.00	10.00	20.0
3/4"	1/4"	□12 x 4R10	19.05	6.35	1.65	1.00	10.00	20.0
3/4"	3/8"	□12 x 6R10	19.05	9.53	1.65	1.00	10.00	20.0
3/4"	1/2"	□12 x 8R10	19.05	12.70	1.65	1.24	10.00	20.0

• Dimensions are for reference only and are subject to change.

METAL FACE SEAL FITTINGS

GLANDS
WELDED ASSEMBLIES
GASKETS
NUTS
CAPS AND PLUGS
HIGH-FLOW CONNECTIONS -"H"TYPE

High-Purity Nickel and Hastelloy C-22 glands for extremely corrosive applications.
Non-Rotational Female Nut to prevent transmission of torque during make-up and therefore minimize twist of component which causes stress concentration.

MATERIALS

GLANDS, BODIES

Material	Ordering Number Designator	Applicable Specification
316L Stainless Steel	S	JIS G4303/G3214/G5121/G3459/G3463 ASTM A479/A276/A182/A351/A312/A269
316L Stainless Steel Remelted	D	

SOME CONFIGURATION

GASKETS

Material	Ordering Number Designator	Applicable Specification
Nickel	UN	ASTM B162
316L Stainless Steel	US	ASTM A167

SPECIFICATIONS

- **Pressure Ratings** are based upon tests conducted using MFS assemblies. All ratings comply with calculations per ANSI Code for Pressure Piping B31.3.
- **Working Pressures** are rated at ambient temperature and are based on a 4 to 1 design factor.
  To determine pressure ratings in accordance with ANSI B31.1 multiply **Working Pressures** by 0.94.
- **Temperature Ratings**
  Fittings : Stainless Steel 316, 316L 1000℉(537℃)
  Gaskets : High-Purity Nickel 600℉(315℃)
  Stainless Steel 1000℉(537℃)
- **Dimensions** are for reference only and are subject to change
- **Plating** Female nuts are silver plated.
  Avoid chemical processes used for cleaning, electropolishing, and passivation that will remove plating.
  If the plating is damage or removed, thread galling may occur, damaging fitting components and preventing a proper seal.
- **Testing** products are rated to a Helium leak rate of 1 x 10^{-9} atm cc/sec.
- **Internal Surface Finishes:** components are available with controlled surface finishes and electropolished internal surfaces.
- **Cleaning and Packaging:** Ultra-High Purity cleaning and packaging in a Class 10 Clean Room environment validated per Federal Standard 209E, is standard for all electropolished components.

Designator	Surface Finish (Ry) Maximum	Surface Finish (Ra) Maximum
EP	0.7μm	5μinch
BA	3.0μm	10μinch

TYPICAL FACE SEAL FITTINGS


Female Nut


Gland


Gasket

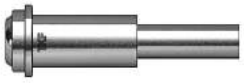
Gland


Male Nut

GLANDS

FEMALE GLAND

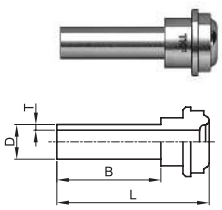

Tube Size	Head Size	Ordering Number	D	T	B	L	ANS (Inch)
1/8"	1/8"	□2SG19	3.18	0.70	19.05	27.40	1/8
1/4"	1/4"	□4SG6	6.35	1.00	6.35	15.24	1/4
1/4"	1/4"	□4SG10	6.35	1.00	10.00	18.89	1/4
1/4"	1/4"	□4SG19	6.35	1.00	19.05	27.94	1/4
3/8"	1/2"	□6SG6	9.53	1.00	6.35	15.75	1/2
3/8"	1/2"	□6SG10	9.53	1.00	10.00	19.40	1/2
3/8"	1/2"	□6SG19	9.53	1.00	19.05	28.45	1/2
1/2"	1/2"	□8SG6	12.70	1.24	6.35	15.75	1/2
1/2"	1/2"	□8SG10	12.70	1.24	10.00	19.40	1/2
1/2"	1/2"	□8SG19	12.70	1.24	19.05	28.45	1/2
3/4"	3/4"	□12SG19	19.05	1.65	19.05	34.50	3/4
1"	1"	□16SG19	25.40	1.65	19.05	38.60	1
1/4"	1/2"	□8 x 4SG6	6.35	1.00	6.35	15.75	1/2
1/4"	1/2"	□8 x 4SG10	6.35	1.00	10.00	19.40	1/2
1/4"	1/2"	□8 x 4SG19	6.35	1.00	19.05	28.45	1/2

ANS : AVAILABLE NUT SIZE

MALE GLAND

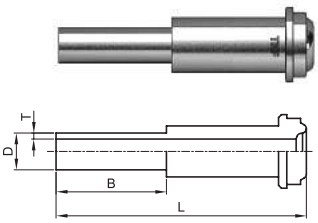

Tube Size	Head Size	Ordering Number	D	T	B	L	ANS (Inch)
1/8"	1/8"	□2LG19	3.18	0.70	19.05	36.00	1/8
1/4"	1/4"	□4LG6	6.35	1.00	6.35	30.48	1/4
1/4"	1/4"	□4LG10	6.35	1.00	10.00	34.13	1/4
1/4"	1/4"	□4LG19	6.35	1.00	19.05	43.18	1/4
3/8"	1/2"	□6LG6	9.53	1.00	6.35	32.77	1/2
3/8"	1/2"	□6LG10	9.53	1.00	10.00	36.42	1/2
3/8"	1/2"	□6LG19	9.53	1.00	19.05	45.47	1/2
1/2"	1/2"	□8LG6	12.70	1.24	6.35	32.77	1/2
1/2"	1/2"	□8LG10	12.70	1.24	10.00	36.42	1/2
1/2"	1/2"	□8LG19	12.70	1.24	19.05	45.47	1/2
3/4"	3/4"	□12LG19	19.05	1.65	19.05	51.56	3/4
1"	1"	□16LG19	25.40	1.65	19.05	58.93	1
1/4"	1/2"	□8 x 4LG6	6.35	1.00	6.35	32.77	1/2
1/4"	1/2"	□8 x 4LG10	6.35	1.00	10.00	36.42	1/2
1/4"	1/2"	□8 x 4LG19	6.35	1.00	19.05	45.47	1/2

ANS : AVAILABLE NUT SIZE

ATW FEMALE LONG GLAND

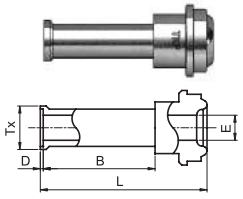

Tube Size	Head Size	Ordering Number	B	D	E	L	Tx
1/4"	1/4"	□4ASG19	19.05	0.5	4.6	28.4	7.4
3/8"	1/2"	□6ASG19	19.05	0.8	7.9	29.2	10.4
1/2"	1/2"	□8ASG19	19.05	1.0	10.2	29.5	14.0
1/4"	1/2"	□8 x 4ASG19	19.05	0.5	10.2	29.5	7.4

ANS : AVAILABLE NUT SIZE

ATW MALE LONG GLAND

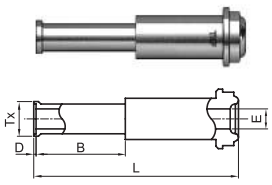

Tube Size	Head Size	Ordering Number	B	D	E	L	Tx
1/4"	1/4"	□4ALG19	19.05	0.5	4.6	43.7	7.4
3/8"	1/2"	□6ALG19	19.05	0.8	7.9	46.2	10.4
1/2"	1/2"	□8ALG19	19.05	1.0	10.2	46.5	14.0
3/4"	3/4"	□12ALG19	19.05	1.0	16.5	52.6	20.3
1"	1"	□16ALG19	24.40	1.0	22.1	65.3	26.9
1/4"	1/2"	□8 x 4ALG19	19.05	0.5	10.2	46.5	7.4

ANS : AVAILABLE NUT SIZE

• Dimensions are for reference only and are subject to change.

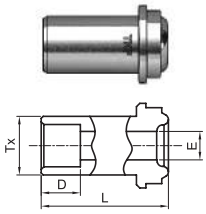

SOCKET WELD SHORT GLAND

Socket Size	Head Size	Ordering Number	D	E	L	Tx
1/4"	1/4"	□4SWSG	7.1	4.6	12.7	8.9

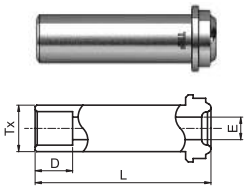

SOCKET WELD LONG GLAND

Socket Size	Head Size	Ordering Number	D	E	L	Tx
1/8"	1/8"	□2SWLG	2.5	2.3	17.8	5.1
1/4"	1/4"	□4SWLG	7.1	4.6	33.3	8.9
3/8"	1/2"	□6SWLG	7.9	7.1	38.1	15.2
1/2"	1/2"	□8SWLG	9.6	10.2	38.1	15.2
3/4"	3/4"	□12SWLG	11.2	15.7	50.8	22.4
1"	1"	□16SWLG	15.7	22.1	56.4	30.2

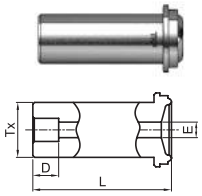

SOCKET WELD REDUCING LONG GLAND

Socket Size	Head Size	Ordering Number	D	E	L	Tx
1/8"	1/4"	□4 x 2SWLG	2.5	2.3	33.3	8.9
1/4"	1/2"	□8 x 4SWLG	7.1	4.6	38.1	15.2

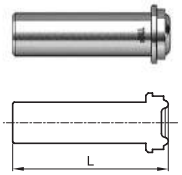

BLIND GLAND

Head Size	Ordering Number	L	Head Size	Ordering Number	L
1/8"	□2BLG	17.8	3/4"	□12BLG	50.8
1/4"	□4BLG	33.3	1"	□16BLG	56.4
1/2"	□8BLG	38.1			

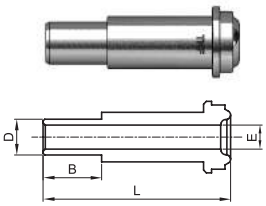

MALE WELD GLAND

Tube Size	Head Size	Ordering Number	D	E	B	L	ANS (Inch)
1/8"	1/8"	□2MG	3.18	1.5	7.1	17.8	1/8
1/4"	1/4"	□4MG	6.35	3.0	10.4	33.3	1/4
3/8"	1/2"	□6MG	9.53	7.1	10.4	38.1	3/8
1/2"	1/2"	□8MG	12.70	10.2	12.7	38.1	1/2

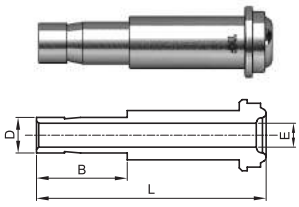

TUBE ADAPTER

Tube Size	Head Size	Ordering Number	D	E	B	L	ANS (Inch)
1/4"	1/4"	□4TA	6.35	4.3	16.2	41	1/4
3/8"	1/2"	□6TA	9.53	6.8	17.8	46	3/8
1/2"	1/2"	□8TA	12.70	9.4	24.4	49.3	1/2

• Dimensions are for reference only and are subject to change.

WELD & METAL SEAL FITTINGS |

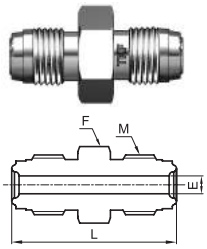

DOUBLE MALE UNION

Head Size	Ordering Number	E	L	F Hex Flat	M
1/8"	□2MU	2.30	28.70	9.52	5/16-24 UNF
1/4"	□4MU	4.35	39.37	15.88	9/16-18 UNF
1/2"	□8MU	10.22	46.74	23.81	7/8-14 UNF
3/4"	□12MU	15.75	61.98	33.34	1 1/4 -18 UNEF
1"	□16MU	22.10	65.79	41.28	1 1/2-20 UN

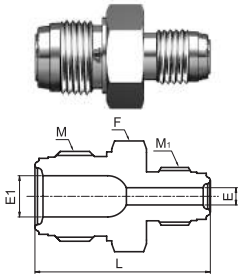

DOUBLE MALE REDUCING UNION

Head Size	Head Size	Ordering Number	E	E_1	F Hex Flat	L	M	M_1
1/4"	1/8"	□4 x 2MU	2.30	4.35	15.88	34.8	9/16-18 UNF	5/16-24 UNF
1/2"	1/4"	□8 x 4MU	4.35	10.20	23.81	43.4	7/8-14 UNF	9/16-18 UNF

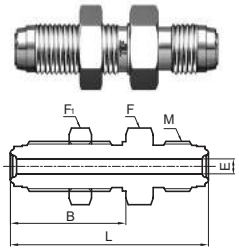

BULKHEAD UNION

Head Size	Ordering Number	E	B	L	F Hex Flat	F_1 Hex Flat	M
1/4"	□4BH	4.35	33.00	56.60	19.05	19.05	9/16-18 UNF
1/2"	□8BH	10.22	37.60	65.25	26.99	21.99	7/8-14 UNF
3/4"	□12BH	15.75	43.40	79.00	38.1	38.1	1 1/4 -18 UNEF
1"	□16BH	22.10	47.10	86.00	44.45	44.45	1 1/2-20 UN

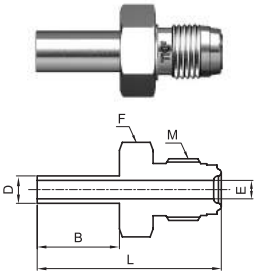

TBW BODY

Tube Size	Ordering Number	D	B	E	L	F Hex Flat	M
1/4"	□4BY19	6.35	19.05	4.35	42.65	15.88	9/16-18 UNF
3/8"	□6BY19	9.53	19.05	10.22	46.70	23.81	7/8-14 UNF
1/2"	□8BY19	12.70	19.05	10.22	46.70	23.81	7/8-14 UNF
3/4"	□12BY19	19.05	19.05	15.75	55.55	33.34	1 1/4 -18 UNEF

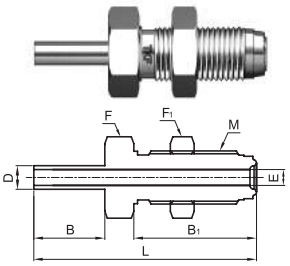

TBW BULKHEAD CONNECTOR

Tube Size	Ordering Number	D	E	B	B_1	L	F Hex Flat	F_1 Hex Flat	M
1/4"	□4BHY	6.35	4.35	19.05	33.00	59.85	19.05	15.88	9/16-18 UNF
1/2"	□8BHY	12.70	10.22	19.05	37.60	65.25	26.99	26.99	7/8-14 UNF
3/4"	□12BHY	19.05	15.75	19.05	43.25	71.30	38.1	38.1	1 1/4-18 UNEF

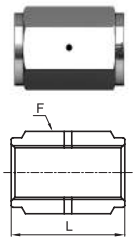

COUPLING

Head Size	Ordering Number	F Hex Flat	L	Head Size	Ordering Number	F Hex Flat	L
1/8"	□2CG	11.11	16.8	3/4"	□12CG	38.1	42.7
1/4"	□4CG	19.05	30.2	1"	□16CG	44.45	51.8
1/2"	□8CG	26.99	33.3				

• Dimensions are for reference only and are subject to change.

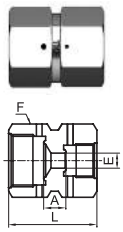

DOUBLE FEMALE REDUCING UNION

Head Size	Head Size	Ordering Number	E	F Hex Flat	A	L
1/2"	1/4"	□8 x 4FU	6.4	26.99	8.9	35.8

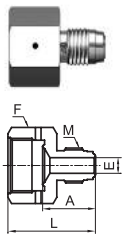

REDUCING ADAPTER

Head Size	Head Size	Ordering Number	E	F Hex Flat	A	L	M
1/8"	1/4"	□2 x 4RA	2.3	19.05	17.5	30.2	5/16-24 UNF
1/4"	1/2"	□4 x 8RA	4.6	26.99	21.6	35.8	9/16-18 UNF

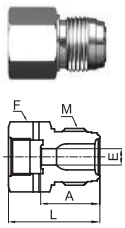

REDUCING BUSHING

Head Size	Head Size	Ordering Number	E	F Hex Flat	A	L	M
1/4"	1/8"	□4 x 2RB	3.3	15.88	19.3	26.9	9/16-18 UNF
1/2"	1/4"	□8 x 4RB	6.4	23.81	23.1	35.8	7/8-14 UNF

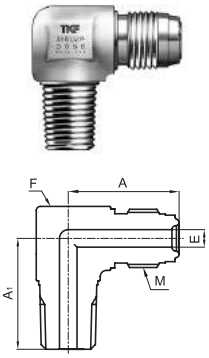

MALE ELBOW (PT)

Head Size	PT SIZE	Ordering Number	E	A	A_1	F Body Cube	M
1/4"	1/4"	□4ME-X32	4.35	27.18	27.18	17	9/16-18 UNF
1/2"	3/8"	□6ME-X32	10.22	36.83	32.00	25	7/8-14 UNF
1/2"	1/2"	□8ME-X32	10.22	36.83	36.83	25	7/8-14 UNF
3/4"	3/4"	□12ME-X32	15.75	48.80	43.50	33.3	1 1/4-18 UNEF

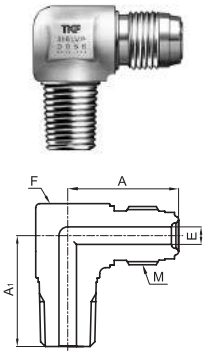

MALE ELBOW (NPT)

Head Size	PT SIZE	Ordering Number	E	A	A_1	F Body Cube	M
1/4"	1/4"	□4ME	4.35	27.18	27.18	17	9/16-18 UNF
1/2"	3/8"	□6ME	10.22	36.83	32.00	25	7/8-14 UNF
1/2"	1/2"	□8ME	10.22	36.83	36.83	25	7/8-14 UNF
3/4"	3/4"	□12ME	15.75	48.80	43.50	33.3	1 1/4-18 UNEF

• Dimensions are for reference only and are subject to change.

WELD & METAL SEAL FITTINGS |

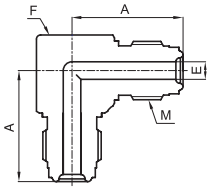

UNION ELBOW

Head Size	Ordering Number	E	A	F Body Cube	M
1/4"	□4UE	4.35	27.18	17	9/16-18 UNF
1/2"	□8UE	10.22	36.83	25	7/8-14 UNF
3/4"	□12UE	15.75	48.77	33.3	1 1/4-18 UNEF
1"	□16UE	22.10	50.80	42.8	1 1/2-20 UN

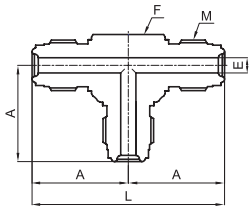

UNION TEE

Head Size	Ordering Number	E	A	L	F Body Cube	M
1/4"	□4UT	4.35	27.18	54.36	17	9/16-18 UNF
1/2"	□8UT	10.22	36.83	73.66	25	7/8-14 UNF
3/4"	□12UT	15.75	48.77	97.54	33.3	1 1/4-18 UNEF
1"	□16UT	22.10	50.80	101.60	42.8	1 1/2-20 UN

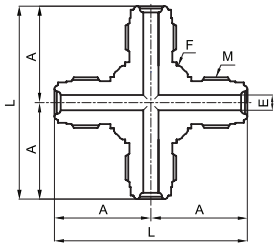

UNION CROSS

Head Size	Ordering Number	E	A	L	F Body Cube	M
1/4"	□4UC	4.35	27.18	54.36	17	9/16-18 UNF
1/2"	□8UC	10.22	36.83	73.66	25	7/8-14 UNF
3/4"	□12UC	15.75	48.77	97.54	33.3	1 1/4-18 UNEF
1"	□16UC	22.10	50.80	101.60	42.8	1 1/2-20 UN

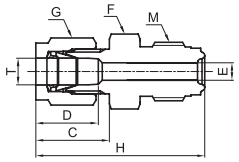

TUBE FITTING CONNECTOR

Tube Size	Head Size	Ordering Number	C	D	E	F Hex Flat	G Hex Flat	H	T	M
1/4"	1/4"	□4MCK	17.80	15.20	4.35	15.88	14.29	41.1	1/4"	9/16-18 UNF
3/8"	1/2"	□6MCK	19.30	16.80	10.22	23.81	17.46	46.7	3/8"	7/8-14 UNF
1/2"	1/2"	□8MCK	21.80	22.90	10.22	23.81	22.23	49.5	1/2"	7/8-14 UNF

• Dimensions are for reference only and are subject to change.

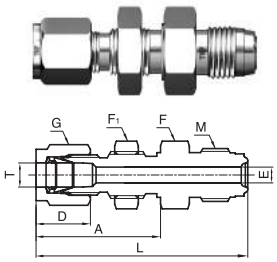

TUBE FITTING BULKHEAD CONNECTOR

Tube Size	Head Size	Ordering Number	A	D	E	F Hex Flat	F1 Hex Flat	G Hex Flat	L	T	M
1/4"	1/4"	□4BHCK	33.5	15.20	4.6	15.88	15.88	14.29	57.2	1/4"	9/16-18 UNF
3/8"	1/2"	□6BHCK	36.8	16.80	7.1	23.81	19.05	17.46	64.5	3/8"	7/8-14 UNF
1/2"	1/2"	□8BHCK	41.9	22.90	10.2	23.81	23.81	22.23	69.6	1/2"	7/8-14 UNF

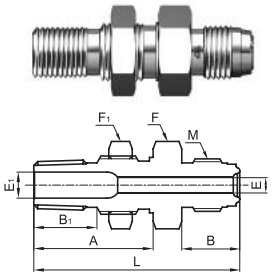

MALE BULKHEAD CONNECTOR (NPT)

Head Size	NPT SIZE	Ordering Number	B	B1	E	E1	F Hex Flat	F1 Hex Flat	A	L	M
1/4"	1/4"	□4BHC	15.7	14.2	4.6	7.1	20.64	20.64	31.5	56.1	9/16-18 UNF
1/2"	1/4"	□8 x 4BHC	19.1	14.2	10.2	7.1	23.81	20.64	31.5	59.4	7/8-14 UNF

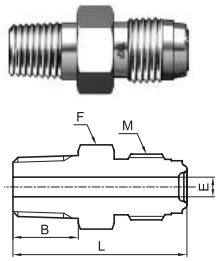

MALE CONNECTOR (PT)

Head Size	PT SIZE	Ordering Number	E	B	L	F Hex Flat	M
1/8"	1/8"	□2MC-X32	2.30	9.60	27.20	11.11	5/16-24 UNF
1/4"	1/4"	□4MC-X32	4.35	14.22	37.84	15.88	9/16-18 UNF
1/2"	3/8"	□6MC-X32	7.44	14.22	41.87	23.81	7/8-14 UNF
1/2"	1/2"	□8MC-X32	10.22	19.05	46.74	23.81	7/8-14 UNF
3/4"	3/4"	□12MC-X32	15.75	19.05	55.63	33.34	1 1/4-18 UNEF
1"	1"	□16MC-X32	22.10	23.88	62.74	41.28	1 1/2-20 UN

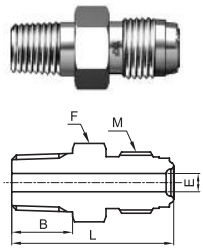

MALE CONNECTOR (NPT)

Head Size	PT SIZE	Ordering Number	E	B	L	F Hex Flat	M
1/8"	1/8"	□2MC	2.30	9.60	27.20	11.11	5/16-24 UNF
1/4"	1/4"	□4MC	4.35	14.22	37.84	15.88	9/16-18 UNF
1/2"	3/8"	□6MC	7.44	14.22	41.87	23.81	7/8-14 UNF
1/2"	1/2"	□8MC	10.22	19.05	46.74	23.81	7/8-14 UNF
3/4"	3/4"	□12MC	15.75	19.05	55.63	33.34	1 1/4-18 UNEF
1"	1"	□16MC	22.10	23.88	62.74	41.28	1 1/2-20 UN

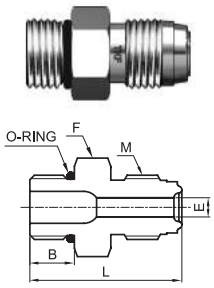

MALE CONNECTOR (ST)

Head Size	ST SIZE	Ordering Number	E	B	L	F Hex Flat	M	UNIFORM O-Ring Size
1/4"	9/16-18 UNF	□4MCS	4.35	9.9	33.8	19.05	9/16-18 UNF	F-906
1/2"	7/8-14 UNF	□8MCS	10.22	12.7	42.2	25.4	7/8-14 UNF	F-910
3/4"	1 3/16-12 UNF	□12MCS	15.75	15.0	51.5	33.34	1 1/16-12 UNF	F-912

• Dimensions are for reference only and are subject to change.

WELD & METAL SEAL FITTINGS |

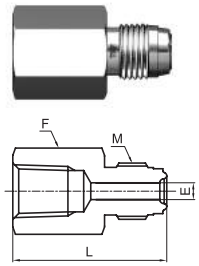

FEMALE CONNECTOR (PT)

Head Size	PT SIZE	Ordering Number	E	F Hex Flat	L	M
1/8"	1/8"	□2FC-X32	2.30	14.29	30.2	5/16-24 UNF
1/4"	1/4"	□4FC-X32	4.35	19.05	39.1	9/16-18 UNF
1/2"	3/8"	□6FC-X32	7.44	23.81	44.7	7/8-14 UNF
1/2"	1/2"	□8FC-X32	10.22	26.99	50.5	7/8-14 UNF
3/4"	3/4"	□12FC-X32	15.75	33.34	59.9	1 1/4-18 UNEF
1"	1"	□16FC-X32	22.10	41.28	63.8	1 1/2-20 UN

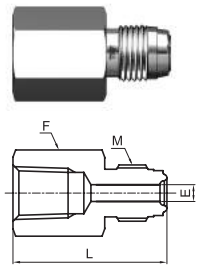

FEMALE CONNECTOR (NPT)

Head Size	NPT SIZE	Ordering Number	E	F Hex Flat	L	M
1/8"	1/8"	□2FC	2.30	14.29	30.2	5/16-24 UNF
1/4"	1/4"	□4FC	4.35	19.05	39.1	9/16-18 UNF
1/2"	3/8"	□6FC	7.44	23.81	44.7	7/8-14 UNF
1/2"	1/2"	□8FC	10.22	26.99	50.5	7/8-14 UNF
3/4"	3/4"	□12FC	15.75	33.34	59.9	1 1/4-18 UNEF
1"	1"	□16FC	22.10	41.28	63.8	1 1/2-20 UN

GASKETS

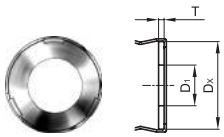

GASKET RETAINER ASSEMBLY

Head Size	Ordering Number	T	D1	Dx
1/4"	□4GR	0.8	5.5	11.85
1/2"	□8GR	0.8	11.1	19.27
3/4"	□12GR	0.8	16.8	27.9
1"	□16GR	0.8	22.6	34.2

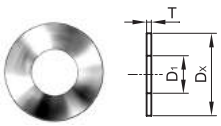

GASKET

Head Size	Ordering Number	T	D1	Dx
1/8"	□2GT	0.8	2.3	6.6
1/4"	□4GT	0.8	5.5	12.7
1/2"	□8GT	0.8	11.1	19.8
3/4"	□12GT	0.8	16.8	29
1"	□16GT	0.8	22.6	35.8

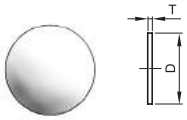

BLIND GASKET

Head Size	Ordering Number	D	T
1/8"	□2GB	6.6	0.8
1/4"	□4GB	11.9	0.8
1/2"	□8GB	19.8	0.8
3/4"	□12GB	28.9	0.8
1"	□16GB	35.5	0.8

• Dimensions are for reference only and are subject to change.

NUTS, CAPS AND PLUGS

FEMALE NUT

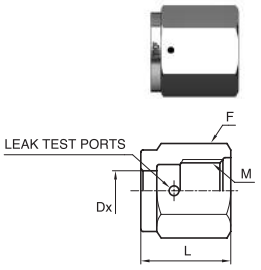

Head Size	Ordering Number	L	F Hex Flat	Dx	M
1/8"	□2FN	13.5	11.11	5.30	5/16-24 UNF
1/4"	□4FN	20.5	19.05	9.10	9/16-18 UNF
1/2"	□8FN	22.3	26.99	15.50	7/8-14 UNF
3/4"	□12FN	28.4	38.10	22.60	1 1/4-18 UNEF
1"	□16FN	34.0	44.45	30.50	1 1/2-20 UN

* Material - S: 316L Stainless Steel SS: 316 Stainless Steel

MALE NUT

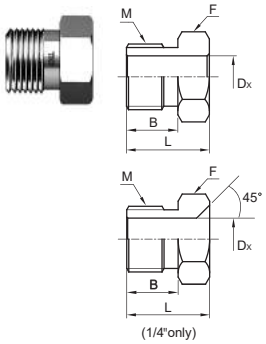

Head Size	Ordering Number	L	B	F Hex Flat	Dx	M
1/8"	□2MN	12.7	8.2	9.52	5.30	5/16-24 UNF
1/4"	□4MN	18.0	11.0	15.88	9.10	9/16-18 UNF
1/4"	□4MNS	13.7	11.0	15.88	9.10	9/16-18 UNF
1/2"	□8MN	20.5	12.7	23.81	15.50	7/8-14 UNF
3/4"	□12MN	25.4	16.0	33.34	22.60	1 1/4-18 UNEF
1"	□16MN	30.2	20.0	41.28	30.50	1 1/2-20 UN

* 4MNS : Short Male Nut 1/4" Only
* Material - S: 316L Stainless Steel SS: 316 Stainless Steel

PLUG

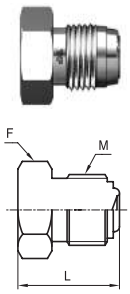

Head Size	Ordering Number	L	F Hex Flat	M
1/8"	□2PG	17.30	9.52	5/16-24 UNF
1/4"	□4PG	23.37	15.88	9/16-18 UNF
1/2"	□8PG	27.43	23.81	7/8-14 UNF
3/4"	□12PG	36.32	33.34	1 1/4 -18 UNEF
1"	□16PG	38.61	41.28	1 1/2-20 UN

CAP

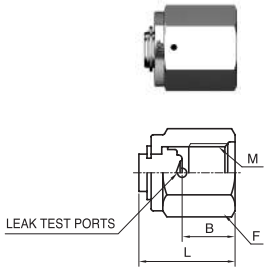

Head Size	Ordering Number	L	B	F Hex Flat	M
1/8"	□2CP	16.00	7.60	11.11	5/16-24 UNF
1/4"	□4CP	24.20	11.18	19.05	9/16-18 UNF
1/2"	□8CP	25.50	11.43	26.99	7/8-14 UNF
3/4"	□12CP	32.77	13.72	38.10	1 1/4-18 UNEF
1"	□16CP	39.12	16.00	44.45	1 1/2-20 UN

• Dimensions are for reference only and are subject to change.

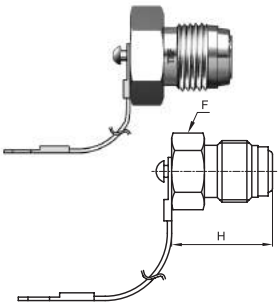

PLUG (CABLE TYPE)

Head Size	Ordering Number	F	H	Cable Length
1/4"	□4PG-C	15.88	23.37	260
1/2"	□8PG-C	23.81	27.43	260

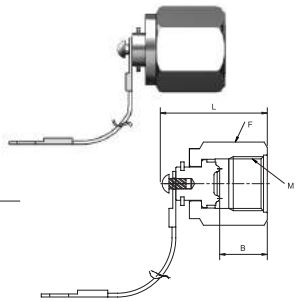

CAP (CABLE TYPE)

Head Size	Ordering Number	L	B	F Hex Flat	M	Cable Length
1/4"	□4CP-C	27.8	11.18	19.05	9/16 - 18 UNF	260
1/2"	□8CP-C	29.0	11.43	26.99	7/8 - 14 UNF	260

HIGH-FLOW CONNECTION - "H" TYPE

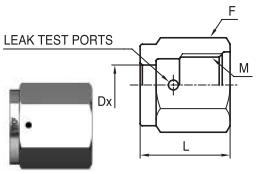

HMFS FEMALE NUT

Head Size	Ordering Number	L	F Hex Flat	Dx	M
1/4"	□4HFN	20.57	19.05	9.90	9/16-18 UNF

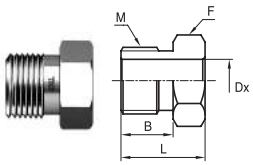

HMFS MALE NUT

Head Size	Ordering Number	B	L	F Hex Flat	Dx	M
1/4"	□4HMN	11.0	18.03	15.88	9.9	9/16-18 UNF

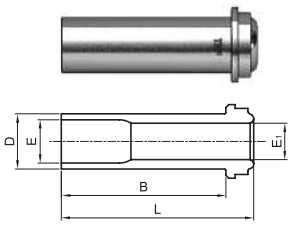

HMFS LONG GLAND

Tube Size	Head Size	Ordering Number	D	B	L	E	E_1
3/8"	1/4"	□6 x 4HLG	9.53	28.4	33.2	7.5	6.28

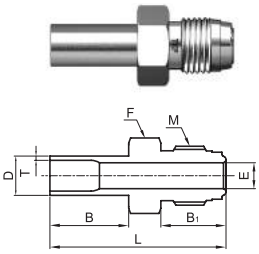

HMFS TBW BODY

Head Size	Tube Size	Ordering Number	D	T	E	B	B_1	F Hex Flat	L	M
1/4"	3/8"	□4 x 6HBY	9.53	1.00	6.4	19.05	15.7	15.88	42.7	9/16-18 UNF

• Dimensions are for reference only and are subject to change.

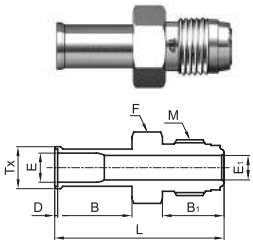

HMFS ATW BODY

Head Size(T)	Tube Size	Ordering Number	B	B_1	D	E	E_1	F Hex Flat	L	Tx	M
1/4"	3/8"	□4 x 6HABY	19.05	15.7	0.8	6.4	7.9	15.88	43.4	10.4	9/16-18 UNF

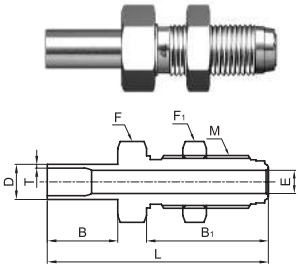

HMFS BULKHEAD CONNECTOR

Head Size	Tube Size	Ordering Number	D	T	B	B_1	E	F Hex Flat	F_1 Hex Flat	L	M
1/4"	3/8"	□4 x 6HBHY	9.53	1.00	19.05	33.0	6.4	19.05	19.05	59.9	9/16-18 UNF

WELDED ASSEMBLIES

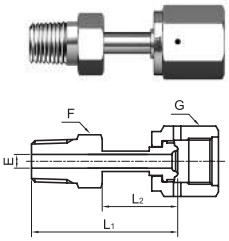

WELDED MALE CONNECTOR (PT)

Head Size	PT SIZE	Ordering Number	E	F Hex Flat	G Hex Flat	L_1	L_2
1/4"	1/4"	□4WMC-X32	4.35	14.29	19.05	45.5	23.4
1/2"	3/8"	□6WMC-X32	10.22	17.46	26.99	48.0	25.4
1/2"	1/2"	□8WMC-X32	10.22	22.23	26.99	53.1	25.6

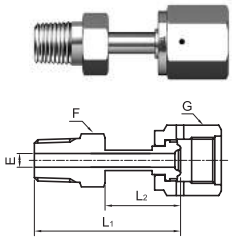

WELDED MALE CONNECTOR (NPT)

Head Size	NPT SIZE	Ordering Number	E	F Hex Flat	G Hex Flat	L_1	L_2
1/4"	1/4"	□4WMC	4.35	14.29	19.05	45.5	23.4
1/2"	3/8"	□6WMC	10.22	17.46	26.99	48.0	25.4
1/2"	1/2"	□8WMC	10.22	22.23	26.99	53.1	25.6

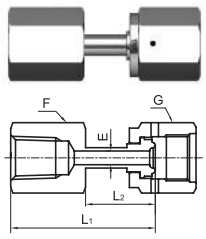

WELDED FEMALE CONNECTOR (PT)

Head Size	PT SIZE	Ordering Number	E	F Hex Flat	G Hex Flat	L_1	L_2
1/4"	1/4"	□4FMC-X32	4.35	19.05	19.05	45.0	23.4
1/2"	3/8"	□6FMC-X32	7.44	22.23	26.99	49.5	26.9
1/2"	1/2"	□8FMC-X32	10.22	26.99	26.99	55.4	26.4

• Dimensions are for reference only and are subject to change.

WELD & METAL SEAL FITTINGS |

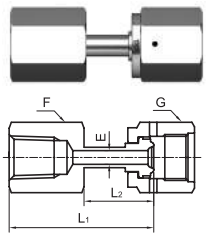

WELDED FEMALE CONNECTOR (NPT)

Head Size	NPT SIZE	Ordering Number	E	F Hex Flat	G Hex Flat	L_1	L_2
1/4"	1/4"	□4FMC	4.35	19.05	19.05	45.0	23.4
1/2"	3/8"	□6FMC	7.44	22.23	26.99	49.5	26.9
1/2"	1/2"	□8FMC	10.22	26.99	26.99	55.4	26.4

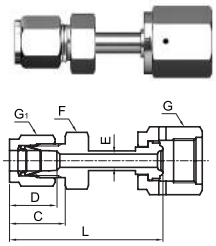

WELDED LOK CONNECTOR

Tube Size	Head Size	Ordering Number	C	D	E	F Hex Flat	G Hex Flat	G_1 Hex Flat	L
1/4"	1/4"	□4WTC	17.78	15.24	4.35	12.70	19.05	14.29	49.28
3/8"	1/2"	□6WTC	19.30	16.76	10.22	15.88	19.05	17.46	50.04
1/2"	1/2"	□8WTC	21.84	22.86	10.22	20.64	26.99	22.22	56.64

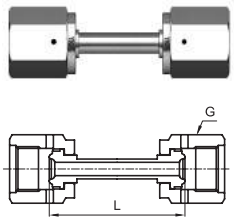

WELDED FEMALE UNION

Head Size	Ordering Number	L	G Hex Flat
1/4"	□4WFU	43.4	19.05
1/2"	□8WFU	46.7	26.99

FEMALE ELBOW UNION WELDED ASSEMBLY

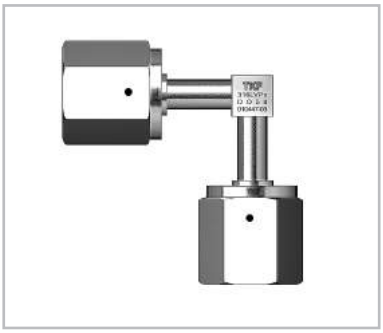

Ordering Number / □ - 4UEW

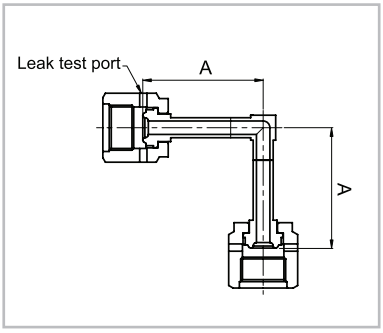

Female Elbow Union Welded Assembly		
Size (OD)	Ordering Number	A
1/4"	□4EUW-X497	25.4
1/4"	□4EUW	38.3

FEMALE TEE UNION WELDED ASSEMBLY

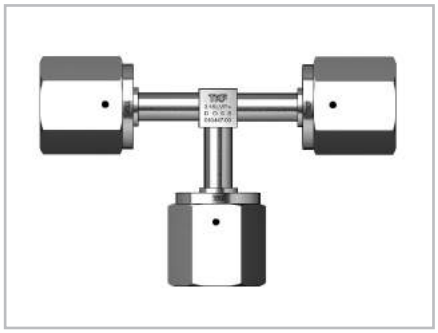

Ordering Number / □ - 4UTW

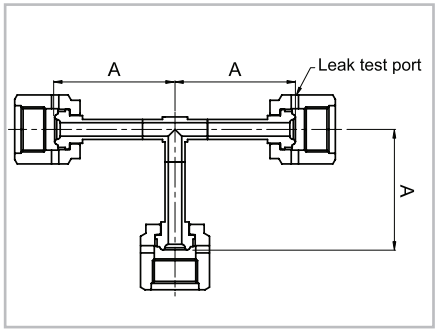

Female Elbow Union Welded Assembly		
Size (OD)	Ordering Number	A
1/4"	□4UTW-X497	25.4
1/4"	□4UTW	38.3

• Dimensions are for reference only and are subject to change.

Tube & Pipe Fittings

TK-FUJIKIN CORPORATION

Fujikin Carp Group

INDEX

MATERIAL GRADE

Our production processes utilize a wide range of materials from single to triple vacuum melted.

STANDARD MATERIAL (SINGLE MELTED MATERIAL)

(Melting method : EF + RH or EF + AOD)

		Chemical Composition(%)							
		C	Si	Mn	P	S	Ni	Cr	Mo
JIS G3459 SUS 304	Standard Value	Max 0.08	Max 1.00	Max 2.00	Max 0.040	Max 0.030	8.00~11.00	18.00~20.00	-
	Typical Example	0.03	0.48	1.04	0.026	0.005	8.57	18.25	-
JIS G3459 SUS 316L	Standard Value	Max 0.030	Max 1.00	Max 2.00	Max 0.040	Max 0.030	12.00~16.00	16.00~18.00	2.00~3.00
	Typical Example	0.016	0.35	0.74	0.024	0.002	12.59	16.71	2.22

		Mechanical Properties			
		Tensile Strength (mm²)	Yield Strength (mm²)	Elongation (%)	Hardness (HB)
JIS G3459 SUS 304	Standard Value	Min 520	Min 205	Min 35	-
	Range	≥ 520	≥ 205	≥ 35	-
JIS G3459 SUS 316L	Average	630	320	50	165
	Standard Value	Min 480	Min 175	Min 35	-
	Range	≥ 480	≥ 175	≥ 35	-
	Average	550	220	55	162

SUS304 and SUS316L according to AP and BA specifications and SUS316L according to EP specifications

SUPER CLEAN MATERIAL (DOUBLE VACUUM-MELTED MATERIAL)

We treat the material steel with double vacuum-melting method, keep the oxygen content below 20ppm reduce nonmetallic inclusion which causes particles. At the same time we keep the carbon content and Mn content at a low level and create high corrosion resistance by increasing Mo content.

No of Pieces	Mass (Kg)	Chemical Composition(%)									
		C ×100	Si ×100	Mn ×100	P ×1000	S ×1000	Ni ×100	Cr ×100	Mo ×100	Al ×1000	N ×1000
41	868	1.3	23	20	24	2	1461	1668	236	2	8.1
Max		1.5	40	40	30	5	1500	1700	250	20	-
Min		-	-	-	-	-	1400	1600	220	-	-

No of Pieces	Mass (Kg)	Tensile Test(JIS Z 2201)				
		Y.SN (mm²)	T.SN (mm²)	El (%)	RA (%)	Hardness (HB)
41	868	208	519	64	90	131
Max		-	-	-	-	187
Min		175	480	40	60	-

SINGLE MELT (×200)

DOUBLE MELT (×200)

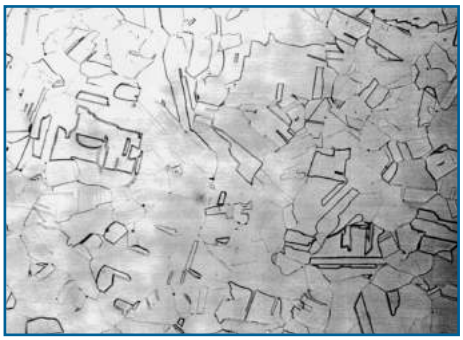

EXAMPLE OF INNER SURFACE ROUGHNESS

TK-FUJIKIN - EP 90° ELBOW SUS 316L 50A×5S

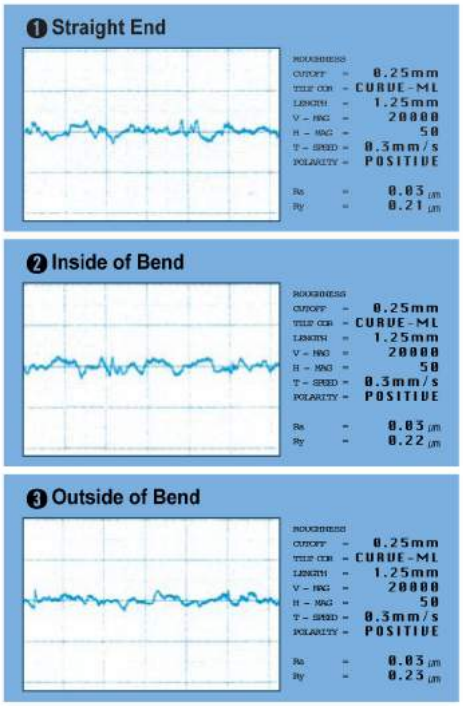

TK-FUJIKIN - EP EQUAL TEE SUS 316L 50A×5S

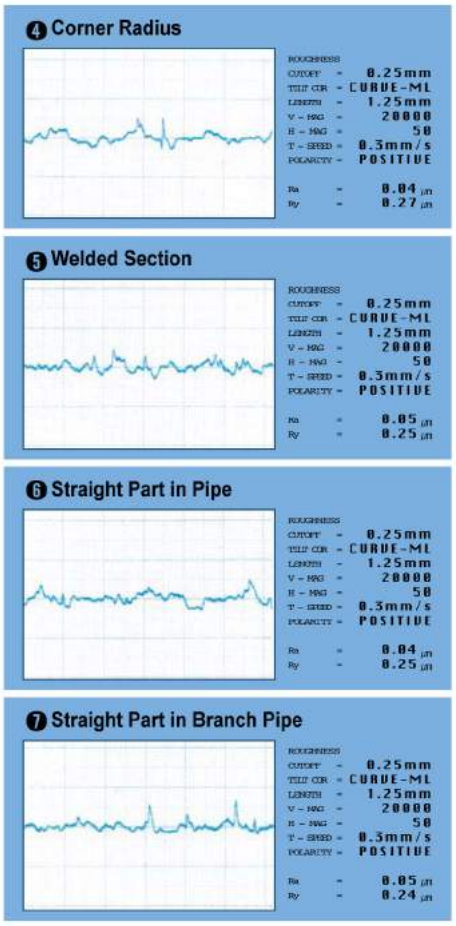

MATERIAL TRACEABILITY

Finished UHP components are mill and heat traceable, permanently marked to correspond to TK-FUJIKIN corporation.
And Mill test report.

The heat code is the reference to the certificate of test results from the raw material supplier, which reports chemical composition analysis and certifies compliance to other requirements asked in TK-FUJIKIN corporation's material specification.
Permanent records of the material certifications are maintained, and a copy of the materials certification for any heat code is available as an option.
The heat code is permanently laser marked on each component so as to be clearly legible as received and after installation.

TYPICAL HEAT NUMBER MARKING

TK-FUJIKIN	TK-FUJIKIN corporation
316LV - Px	Product Grade
D063	Raw Material Heat Number
010278	Control Number

TK-FUJIKIN ELECTROPOLISHED UHP FITTING PRODUCTS SURFACE PASSIVE LAYER SPECIFICATION

	Analytic Technique	Typical Industry Spec.	TK Typical
Cr / Fe Ratio at 10Ang.	AES Depth Profile	≥ 1.0	2.0
Maximum Cr / Fe Ratio(Depth Ang.)	AES Depth Profile	≥ 1.0	3.0 / 8.5
Oxide Layer Thickness(Ang.)	AES Depth Profile	≥ 20	32.5
Carbon Layer Thickness(Ang.)	AES Depth Profile	≤ 10	3.0
Total Cr / Fe Ratio	ESCA	≥ 1.5	2.0
CrO/FeO Ratio	ESCA	≥ 2.0	3.0

F2105H11.SPE : TK2 - 8 II **CE&A**
02 Feb 28 Al Mono 350.0 W 0.0 35.0° 23.50 eV **1.1330e = 0.04 max** **4.00 min**
(Cr2p/Fu)V1

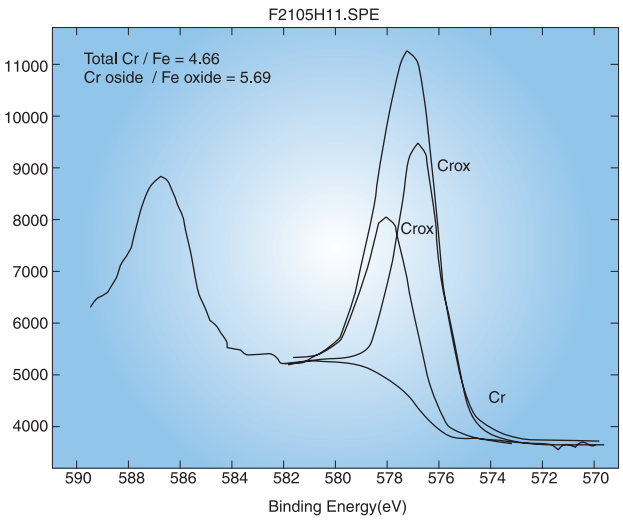

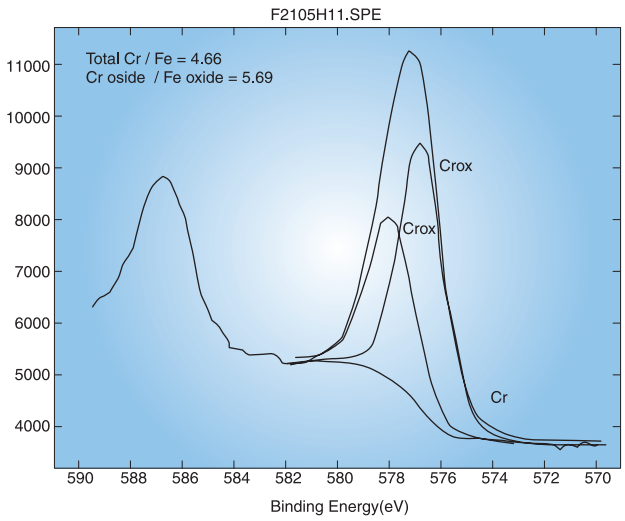

TEST RESULTS ARE FROM RJ LEE GROUP, INC.

TK-FUJIKIN PRODUCTION PROCESS

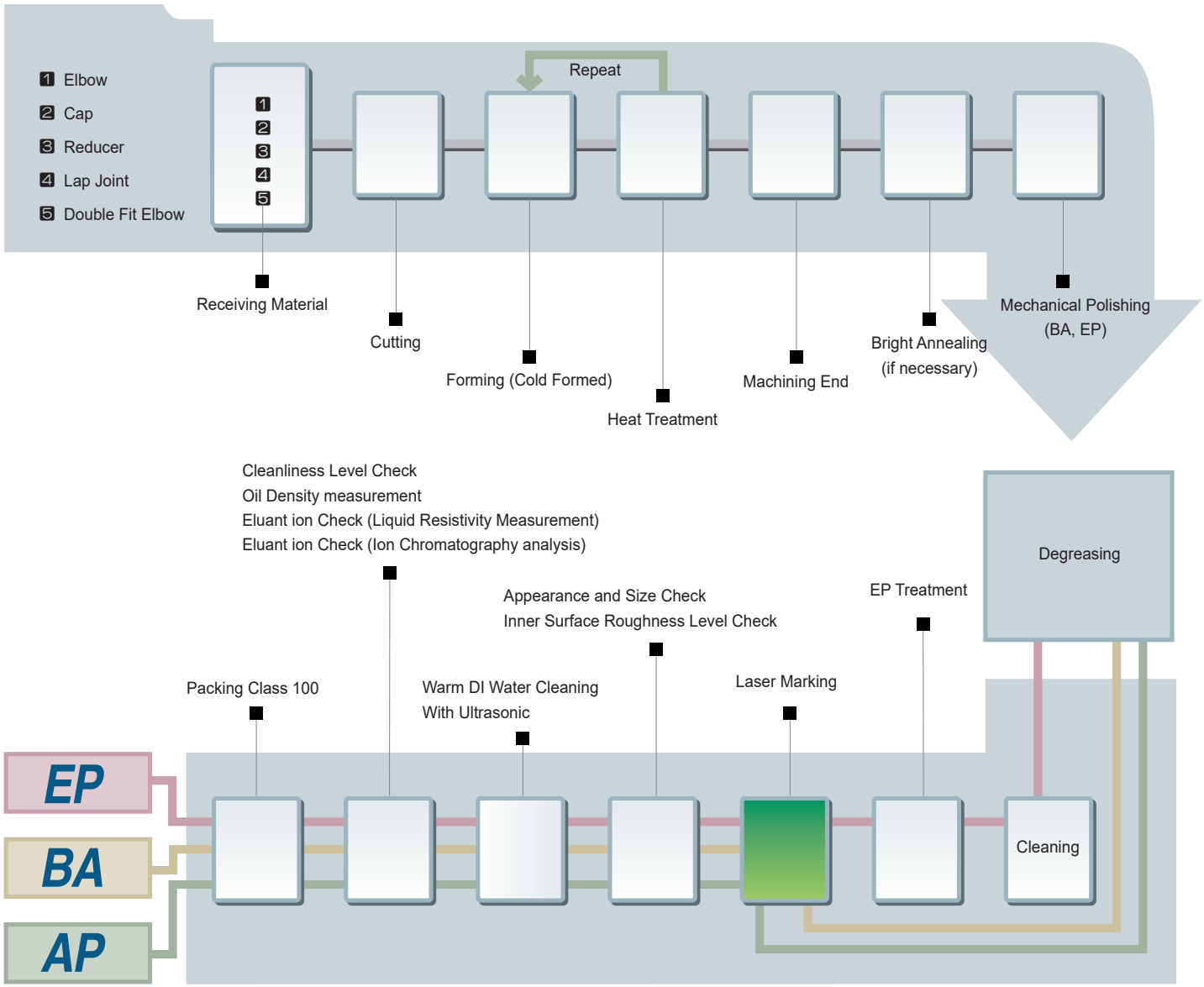

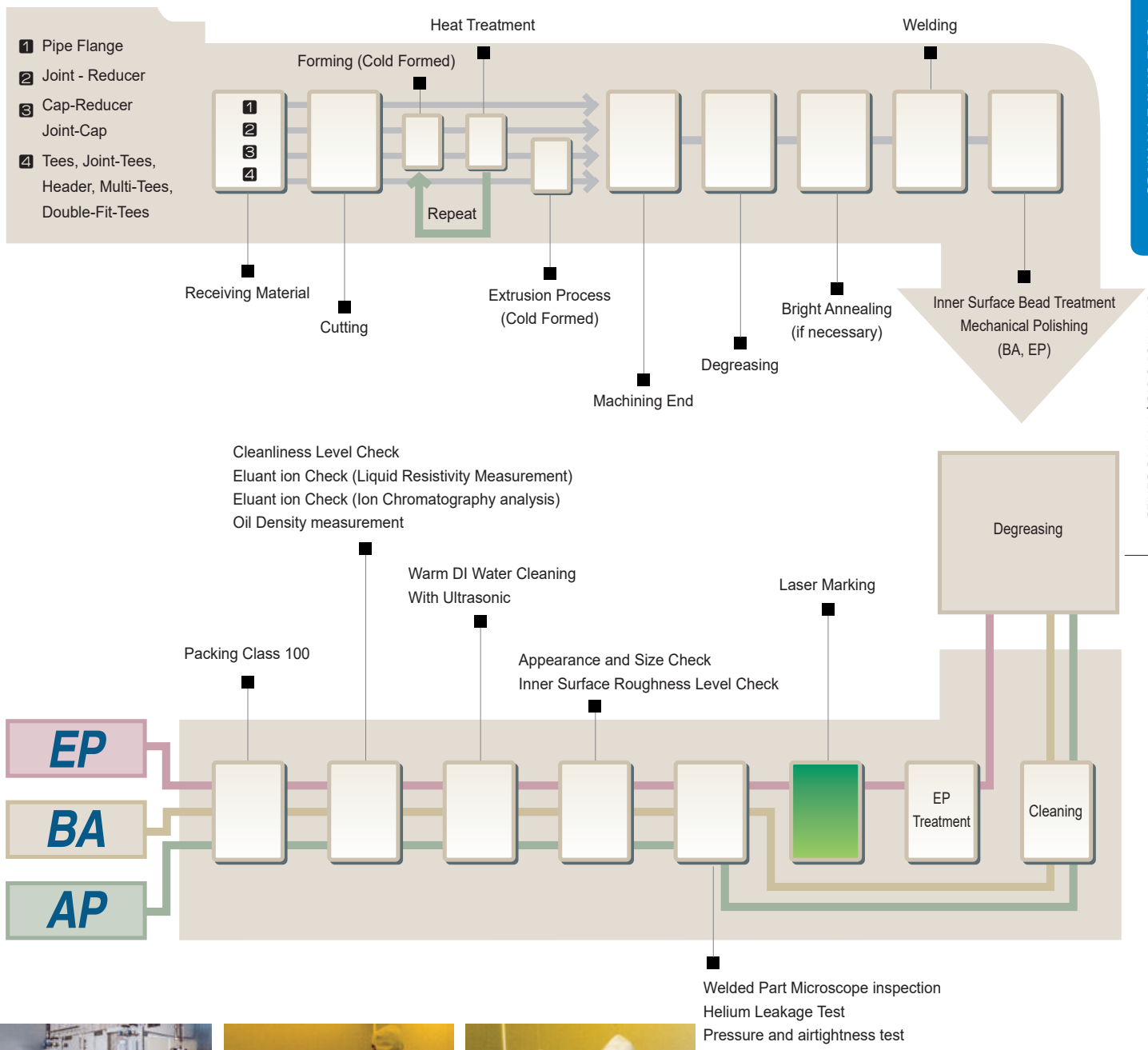
1 Pipe Flange
2 Joint - Reducer
3 Cap-Reducer
Joint-Cap
4 Tees, Joint-Tees,
Header, Multi-Tees,
Double-Fit-Tees
Heat Treatment
Welding
Forming (Cold Formed)
Repeat
Receiving Material
Cutting
Extrusion Process
(Cold Formed)
Machining End
Degreasing
Bright Annealing
(if necessary)
Inner Surface Bead Treatment
Mechanical Polishing
(BA, EP)
Cleanliness Level Check
Eluant ion Check (Liquid Resistivity Measurement)
Eluant ion Check (Ion Chromatography analysis)
Oil Density measurement
Degreasing
Warm DI Water Cleaning
With Ultrasonic
Laser Marking
Packing Class 100
Appearance and Size Check
Inner Surface Roughness Level Check
EP
BA
AP
EP
Treatment
Cleaning
Welded Part Microscope inspection
Helium Leakage Test
Pressure and airtightness test

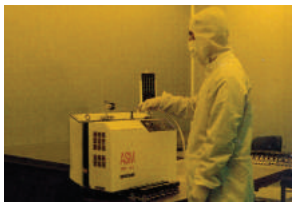

ORDERING INFORMATION

BEND FITTING PART

S	T	4	EB	—	P
Material	Tube Type	Size	Product		Inner Surface Level

Material		Tube Type		Size		Product		Inner Surface Level	
S	SUS316L	T	TUBE	4	1/4″	EB	90° LONG ELBOW	BLANK	BA
4S	SUS304	BLANK	PIPE	6	3/8″	ESB	90° SHORT ELBOW	P	EP
				8	1/2″	HEB	45° LONG ELBOW	MP	MP
				12	3/4″	TSB	STANDARD TEE	AP	AP
				16	1″	STB	STANDARD SHORT TEE		
				20	1 1/4″	TB	REDUCING TEE		
				24	1 1/2″	RCB	CONCENTRIC REDUCER		
				32	2″	REB	ECCENTRIC REDUCER		
				40	2 1/2″	CPB	CAP		
				48	3″	CRB	CAP REDUCER		
				64	4″	JTM	JOINT TEE (MALE)		
				80	5″	JTF	JOINT TEE (FEMALE)		
				96	6″	JRM	JOINT REDUCER (MALE)		
				xxx	PIPE SIZE	JRF	JOINT REDUCER (FEMALE)		
						JCM	JOINT CAP (MALE)		
						JCF	JOINT CAP (FEMALE)		
						TPK	TEFLON GASKET		
						LJF	LAP JOINT FLANGE		
						RFF	RF FLANGE		
						BLD	BLIND FLANGE		
						LAP	LAP JOINT		
						MHB	MULTI-HEADER TEE		
						JMHB	MULTI-HEADER JOINT TEE		

ORDERING EXAMPLES

	S80EB-P		S80X40TB-AP		ST32XT12REB-P	
Material	S	SUS316L	S	SUS316L	S	SUS316L
Tube Type	-	PIPE	-	PIPE	T	TUBE
Size	80	80A	80 x 40	80A x 40A	T32 x T12	2″ x 3/4″
Product	EB	90° LONG ELBOW	TB	REDUCING TEE	REB	ECCENTRIC REDUCER
Inner Surface Level	P	EP	AP	AP	P	EP

ORDERING INFORMATION

COAXIAL DOUBLE FITTING PART

S	T	6	CDEB	—	P
Tube Material	Pipe Type	Inner Tube Size Outer Tube Size Tube Size	Product		Inner Surface Level

Tube Material		Pipe Type		Inner Tube Size	Outer Tube Size	Tube Size
S	SUS316L (Single Melt)	T	TUBE	1/4″	1/2″	4
D	SUS316L (Double Melt)			3/8″	5/8″	6
				1/2″	3/4″	8
				3/4″	1″	12
				1″	1 1/4″	16
				1 1/2″	2″	24

Product		Inner Surface Level	
CDT	COAXIAL DOUBLE TUBE	BLANK	BA
CDEB	COAXIAL DOUBLE 90° ELBOW	P	EP (Single Melt)
CDHEB	COAXIAL DOUBLE 45° ELBOW	PX	EP (Double Melt)
CDTSB	COAXIAL DOUBLE EQUAL TEE		
CDTB	COAXIAL DOUBLE REDUCING TEE		
CDRCB	COAXIAL DOUBLE CONCENTRIC REDUCER		
CJTM (F)	COAXIAL JOINT TEE (MALE / FEMALE)		
CDJTM (F)	CDCOAXIAL DOUBLE JOINT TEE (MALE / FEMALE)		
CSL	COAXIAL SLEEVE		
CDVM (F)	COAXIAL DOUBLE FACE SEAL WELD GLAND (MALE / FEMALE)		
CTM	COAXIAL TERMINATOR		
CBH	COAXIAL BULKHEAD FITTING		

ORDERING EXAMPLES

	ST8CDEB		ST4CDHEB-P		DT4CDTSB-PX	
TUBE MATERIAL	S	SUS316L	S	SUS316L	D	SUS316L
PIPE TYPE	T	TUBE	T	TUBE	T	TUBE
TUBE SIZE	8	1/2" x 3/4"	4	1/4" x 1/2"	4	1/4" x 1/2"
PRODUCT	CDEB	COAXIAL DOUBLE 90° ELBOW	CDHEB	COAXIAL DOUBLE 45° ELBOW	CDTSB	COAXIAL DOUBLE EQUAL TEE
INNER SUREFACE	-	BA	P	EP	PX	EP

PIPE SIZE (A - SIZE)

Unit = mm

Normal Pipe	Outside Diameter at End	Wall Thickness at End		Straight End Length	Thinning Length	
	OD(OD1, OD2)	T		L	J	
		5S	10S		5S	10S
8A	13.8	1.20	1.65	29	4	7
10A	17.3	1.20	1.65	36	4	7
15A	21.7	1.65	2.10	36	5	7
20A	27.2	1.65	2.10	36	5	7
25A	34.0	1.65	2.80	36	5	7
32A	42.7	1.65	2.80	46	5	7
40A	48.6	1.65	2.80	46	5	7
50A	60.5	1.65	2.80	46	5	7
65A	76.3	2.10	3.00	51	6	11
80A	89.1	2.10	3.00	51	6	11
100A	114.3	2.10	3.00	51	6	11
125A	139.8	2.80	3.40	-	7	-
150A	165.2	2.80	3.40	-	7	-
200A	216.3	2.80	4.00	-	7	-
250A	267.4	3.40	4.00	-	-	-
300A	318.5	4.00	4.50	-	-	-
350A	355.6	4.00	4.80	-	-	-
400A	406.4	4.20	4.80	-	-	-
450A	457.2	4.20	4.80	-	-	-
500A	508.0	4.80	5.50	-	-	-
550A	558.8	4.80	5.50	-	-	-
600A	609.6	5.50	6.40	-	-	-

• Refer to 41page Weld Bevel End Manufacture Form

TUBE SIZE (INCH - SIZE)

Unit = mm

Normal Tube	Outside Diameter at End	Wall Thickness at End	Straight End Length	Thinning Length
	OD(OD1, OD2)	T(T1, T2)	L	J
1/8″	3.18	0.7	29	7
1/4″	6.35	1.0 (0.89)	29	7
3/8″	9.53	1.0 (0.89)	29	7
1/2″	12.70	1.0, 1.24 (1.65)	29	7
5/8″	15.88	1.0 (1.24)	36	7
3/4″	19.05	1.24, 1.65	36	7
1″	25.40	1.65, 1.24	36	7
1 1/4″	31.80	1.65	36	7
1 1/2″	38.10	1.65	46	7
2″	50.80	1.65	46	7
2 1/2″	63.50	1.65	51	7
3″	76.20	1.65	51	11
4″	101.60	2.11	51	11
5″	127.00	2.77, 3.05	56	11
6″	152.40	2.77, 3.05	56	11

• Refer to 41page Weld Bevel End Manufacture Form

WELD BEVEL END MANUFACTURE FORM

FORM / TYPE	AUTOMATIC WELDING		MANUAL WELDING	
	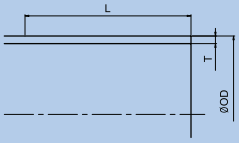	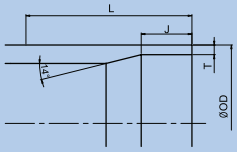	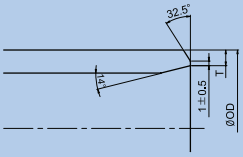	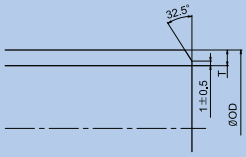
ELBOW (LONG/SHORT)	8A ~ 100A	-	125A ~ 600A	-
EQUAL TEE (LONG/SHORT)	8A ~ 65A	80A ~ 100A	125A ~ 600A	-
REDUCING TEE	8A ~ 100A	-	-	125A ~ 600A
CAP	-	15A ~100A	125A ~ 600A	-
CAP REDUCER	15A ~ 32A	40A ~100A	125A ~ 600A	-
CONCENTRIC REDUCER	15A ~ 100A	-	125A ~ 600A	-
ECCENTRIC REDUCER	15A ~ 100A	-	125A ~ 600A	-

※ WELD BEVEL END MANUFACTURE FORM is described by Standard of mother pipe.

DIMENSIONAL TOLERANCE

Unit = mm

Item	Products	Normal Pipe Size				
		1/8″ ~ 3/8″	8A ~ 10A 1/2″ ~ 3/4″	15A ~ 65A 1″ ~ 3″	80A ~ 200A 4″ ~ 6″	250A ~ 300A
Pipe Fitting Header Joint-Header Multi-Tee	Outside Diameter at End (OD)	±0.1mm	±1%			
	Wall Thickness at End (T)	Either Bigger ±0.2mm or ±20%				
	Straight End Length (L)	+ Not Specified - 0.4mm				
	Thinning Length (J)	+ Not Specified - 0				
Elbow, D-Elbow	Bend Radius (R)	±0.8mm		±1.6mm		±3.2mm
Elbow, D-Elbow, Tee, Joint-Tee D-Tee, Header Joint-Header, Multi-Tee	Center to End (A · B · C · M)	±0.8mm		±1.6mm		±3.2mm
Lap Joint Pipe Flange	Length (FF FP)	±0.8mm		±1.6mm		±3.2mm
Cap, 180° Return Bend	Back to End (E, BH)	±0.8mm		±3.2mm		
Reducer, Cap Reducer J-Reducer, J-Cap Outside-Diameter-Changeable Fitting Wall-Thickness-Changeable Fitting	Over All Length (H, Q)	±0.8mm		±1.6mm		±3.2mm
Lap Joint	Thickness of Lap (t)		10A		+1.6mm - 0	
	Diameter of Lap (G)		10A		+0mm - 0.8	+0mm -1.6
Header Joint-Header Multi-Tee	Length of End (EL)	±1.6mm				
	Branch Pitch (P)	±1.6mm			±3.2mm	
	Total Length (L)	+5mm -0				

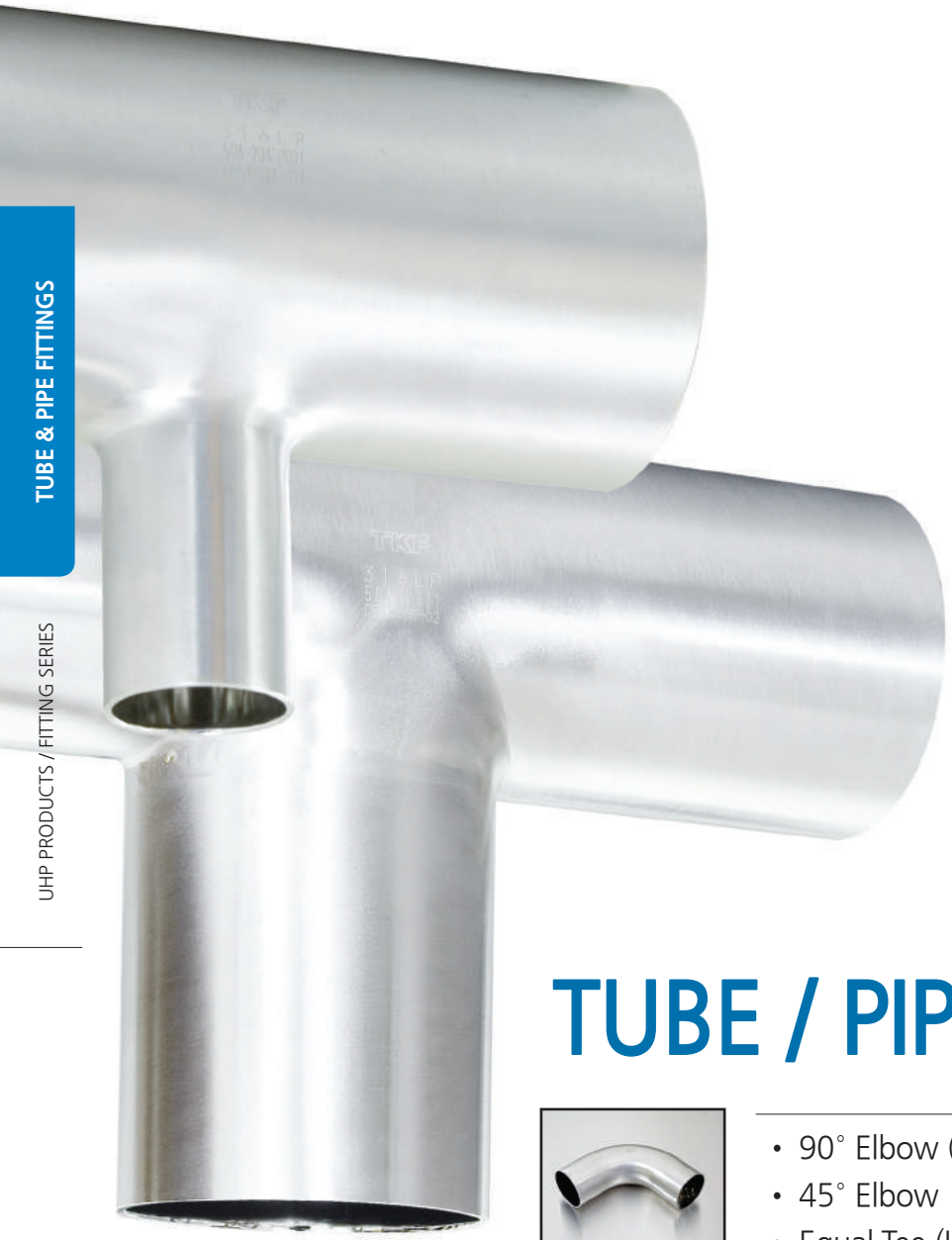

TUBE / PIPE FITTINGS

- 90° Elbow (Long Radius / Short Radius)
- 45° Elbow
- Equal Tee (Long Tee / Short Tee)
- Cap
- Reducer (Concentric / Eccentric Reducer)

- Cap Reducer
- Reducing Tee

- Joint Tee (Female / Male)
- Joint Cap (Female / Male)
- Joint Reducer (Female / Male)

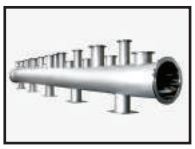

- Multi-Header Tee
- Multi-Header Joint Tee
- Special Clean Spool Header Assembly

90° ELBOW

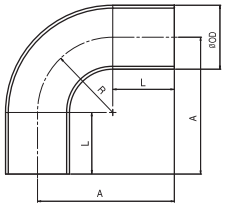

AUTO-WELDING 90° ELBOW(8A~100A)

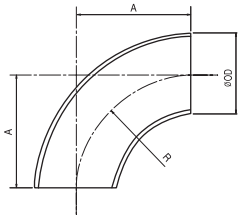

MANUAL-WELDING 90° ELBOW(125A~300A)

LONG RADIUS

unit = mm

PIPE SIZE (A Size)																
OD	8A	10A	15A	20A	25A	32A	40A	50A	65A	80A	100A	125A	150A	200A	250A	**300A**
R	25.4	25.4	38.1	38.1	38.1	47.6	57.2	76.2	63.5	76.2	101.6	190.5	228.6	304.8	381.0	457.2
A	55.0	62.0	75.0	75.0	75.0	94.0	104.0	123.0	147.0	166.0	204.0					
L	29.0	36.0	36.0	36.0	36.0	46.0	46.0	46.0	51.0	51.0	51.0	-	-	-	-	-

TUBE SIZE (Inch Size)														
OD	1/4″	3/8″	1/2″	5/8″	3/4″	1″	1 1/4″	1 1/2″	2″	2 1/2″	3″	4″	5″	6″
R	20.0	23.0	25.0	28.0	30.0	33.0	47.6	57.2	76.2	95.3	95.3	133.4	190.5	228.6
A	49.0	52.0	54.0	64.0	66.0	69.0	84.0	104.0	123.0	147.0	147.0	185.0	250.0	290.0
L	29.0	29.0	29.0	36.0	36.0	36.0	36.0	46.0	46.0	51.0	51.0	51.0	56.0	56.0

SHORT RADIUS

PIPE SIZE (A Size)																
OD	8A	10A	15A	20A	25A	32A	40A	50A	65A	80A	100A	125A	150A	200A	250A	300A
R	12.7	12.7	12.7	19.1	25.4	31.8	38.1	50.8	63.5	76.2	101.6	127.0	152.4	203.2	254.0	304.8
A	42.0	49.0	49.0	56.0	62.0	78.0	85.0	97.0	115.0	128.0	153.0					
L	29.0	29.0	29.0	36.0	36.0	36.0	36.0	46.0	51.0	51.0	51.0	-	-	-	-	-

45° ELBOW

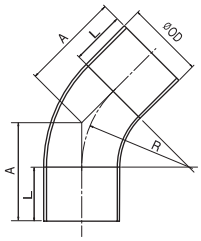

AUTO-WELDING 45° ELBOW(8A~100A)

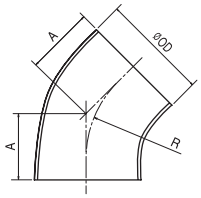

MANUAL-WELDING 45° ELBOW(125A~300A)

LONG RADIUS

unit = mm

PIPE SIZE (A Size)																
OD	8A	10A	15A	20A	25A	32A	40A	50A	65A	80A	100A	125A	150A	200A	250A	300A
R	25.4	25.4	38.1	38.1	38.1	47.6	57.2	76.2	95.3	114.3	152.4	190.5	228.6	304.8	381.0	457.2
A	40.0	47.0	52.0	52.0	52.0	66.0	70.0	78.0	91.0	99.0	115.0	78.9	94.7	126.2	157.8	189.4
L	29.0	36.0	36.0	36.0	36.0	46.0	46.0	46.0	51.0	51.0	51.0	-	-	-	-	-

TUBE SIZE (Inch Size)														
OD	1/4″	3/8″	1/2″	5/8″	3/4″	1″	1 1/4″	1 1/2″	2″	2 1/2″	3″	4″	5″	6″
R	20.0	23.0	25.0	28.0	30.0	33.0	47.6	57.2	76.2	95.3	95.3	133.4	190.5	228.6
A	38.0	39.0	40.0	48.0	49.0	50.0	56.0	70.0	78.0	91.0	91.0	107.0	140.0	155.0
L	29.0	29.0	29.0	36.0	36.0	36.0	36.0	46.0	46.0	51.0	51.0	51.0	56.0	56.0

· Dimensions are for reference only and are subject to change.

EQUAL TEE

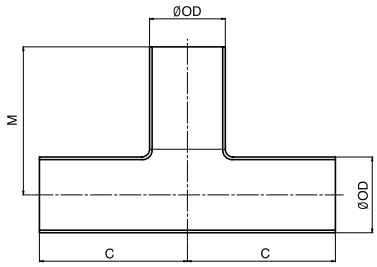

STANDARD TEE

unit = mm

PIPE SIZE (A Size)																
OD	8A	10A	15A	20A	25A	32A	40A	50A	65A	80A	100A	125A	150A	200A	250A	300A
C	42	49	59	65	68	88	95	102	121	130	145	123.8	142.9	177.8	215.9	254.0
M	42	49	59	65	68	88	95	102	121	130	145					

TUBE SIZE (Inch Size)														
OD	1/4″	3/8″	1/2″	5/8″	3/4″	1″	1 1/4″	1 1/2″	2″	2 1/2″	3″	4″	5″	6″
C	35	37	39	49	52	55	59	74	77	90	121	132	140	160
M	35	37	39	49	52	55	59	74	77	90	121	132	140	160

SHORT TEE

PIPE SIZE (A Size)									
OD	15A	20A	25A	32A	40A	50A	65A	80A	100A
C	52	55	59	74	77	83	97	103	116
M	52	55	59	74	77	83	97	103	116

CAP

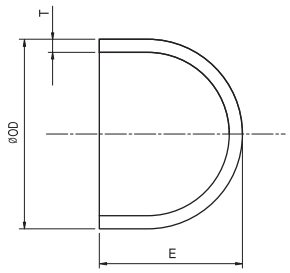

unit = mm

PIPE SIZE (A Size)																
OD	8A	10A	15A	20A	25A	32A	40A	50A	65A	80A	100A	125A	150A	200A	250A	300A
E	12.7	19.1	25.4	25.4	38.1	38.1	38.1	38.1	38.1	50.8	63.5	76.2	88.9	101.6	127.0	152.4
T	1.20	1.20	1.65	1.65	1.65	1.65	1.65	1.65	2.10	2.10	2.10	3.40	3.40	4.00	4.00	4.50

TUBE SIZE (Inch Size)												
OD	1/4″	3/8″	1/2″	5/8″	3/4″	1″	1 1/4″	1 1/2″	2″	2 1/2″	3″	4″
E	12.7	12.7	12.7	12.7	19.1	25.4	38.1	38.1	38.1	38.1	38.1	63.5
T	1.00	1.00	1.24	1.24	1.65	1.65	1.65	1.65	1.65	1.65	1.65	2.11

· Dimensions are for reference only and are subject to change.

REDUCER

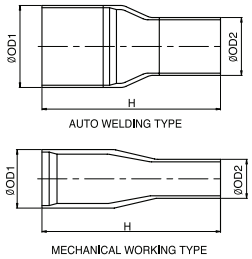

Auto Welding& Mechanical Working Type
Concentric Reducer [RCB](8A~100A)

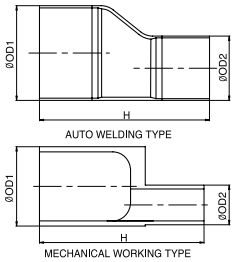

Auto-Welding & Mechanical Working Type
Eccentric Reducer [REB] (8A~100A)

AUTO WELDING TYPE CONCENTRIC REDUCER / ECCENTRIC REDUCER

unit = mm

PIPE SIZE (A Size)					
OD1	OD2	H	OD1	OD2	H
20A	15A	105	50A	40A, 32A, 25A	140
25A	20A, 15A	120	65A	50A, 40A, 32A	165
32A	25A, 20A, 15A	125	80A	65A, 50A, 40A	170
40A	32A, 25A, 20A	130	100A	80A, 65A, 50A	180

MECHANICAL WORKING TYPE CONCENTRIC REDUCER / ECCENTRIC REDUCER

unit = mm

PIPE SIZE (A Size)					
OD1	OD2	H	OD1	OD2	H
15A	3/4″, 1/2″	100	32A	1 1/2″, 1 1/4″, 1″	125
20A	1″, 3/4″, 1/2″	105	40A	1 1/2″, 1 1/4″, 1″, 3/4″, 1/2″, 3/8″	130
25A	1″,3/4″, 1/2″, 3/8″, 1/4″	120	50A	2 ″, 1 1/2″, 1 1/4″, 1″, 3/4″	140

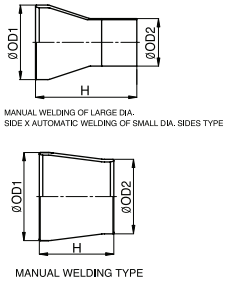

Manual-Welding of Large Dia. Side×Automatic Welding of Small Dia.
Sides & Manual-Welding Type Concentric Reducer [RCB] (125A~300A)

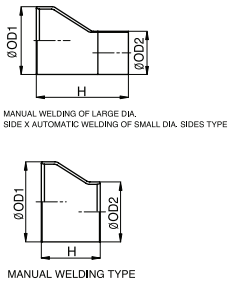

Manual-Welding of Large Dia. Side×Automatic Welding of Small Dia.
Sides & Manual-Welding Type Eccentric Reducer [REB] (125A~300A)

MANUAL WELDING OF LARGE DIA. SIDE X AUTOMATIC WELDING OF SMALL DIA. SIDES TYPE CONCENTRIC / ECCENTRIC REDUCER

PIPE SIZE (A Size)		
OD1	OD2	H
125A	100A, 80A, 65A, 50A	190
150A	100A, 80A, 65A	205
200A	100A	220

MANUAL WELDING TYPE CONCENTRIC / ECCENTRIC REDUCER

PIPE SIZE (A Size)					
OD1	OD2	H	OD1	OD2	H
150A	125A	139.7	250A	200A, 150A, 125A	177.8
200A	150A, 125A	152.4	300A	250A, 200A, 150A, 125A	203.2

· Dimensions are for reference only and are subject to change.

CAP REDUCER (PIPE SIZE)

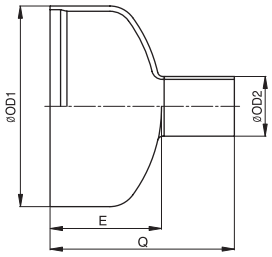

unit = mm

PIPE SIZE (A Size)							
OD1	OD2	E	Q	OD1	OD2	E	Q
15A	8A, 1/2″, 3/8″, 1/4″	25.4	60	125A	8A, 1/2″, 3/8″, 1/4″	76.2	120
	10A, 3/4″, 5/8″		(67)		25A, 20A,15A, 10A, 1 1/4″, 1″, 3/4″, 5/8″		130
20A	8A, 1/2″, 3/8″, 1/4″	25.4	60		50A, 40A, 32A, 2″, 1 1/2″		140
	15A, 10A, 1″, 3/4″, 5/8″		67		100A, 80A, 65A, 4″, 3″, 2 1/2″		(150)
25A	8A, 1/2″, 3/8″, 1/4″	38.1	73	150A	8A, 1/2″, 3/8″, 1/4″	88.9	130
	20A,15A, 10A, 1 1/4″, 1″, 3/4″, 5/8″		(80)		25A, 20A,15A, 10A, 1 1/4″, 1″, 3/4″, 5/8″		140
32A	8A, 1/2″, 3/8″, 1/4″	38.1	73		50A, 40A, 32A, 2″, 1 1/2″		150
	25A, 20A,15A, 10A, 1 1/4″, 1″, 3/4″, 5/8″		80		100A, 80A, 65A, 4″, 3″, 2 1/2″		160
40A	8A, 1/2″, 3/8″, 1/4″	38.1	73	200A	8A, 1/2″, 3/8″, 1/4″	101.6	140
	25A, 20A,15A, 10A, 1 1/4″, 1″, 3/4″, 5/8″		80		25A, 20A,15A, 10A, 1 1/4″, 1″, 3/4″, 5/8″		150
	32A, 1 1/2″		(90)		50A, 40A, 32A, 2″, 1 1/2″		160
50A	8A, 1/2″, 3/8″, 1/4″	38.1	73		100A, 80A, 65A, 4″, 3″, 2 1/2″		170
	25A, 20A,15A, 10A, 1 1/4″, 1″, 3/4″, 5/8″		80	250A	8A, 1/2″, 3/8″, 1/4″	127	170
	40A, 32A, 2 , 1 1/2″		(90)		25A, 20A,15A, 10A, 1″, 3/4″		180
65A	8A, 1/2″, 3/8″, 1/4″	38.1	73		50A, 40A, 32A		190
	25A, 20A,15A, 10A, 1 1/4″, 1″, 3/4″, 5/8″		80		100A, 80A, 65A		200
	50A, 40A, 32A, 2″, 1 1/2″		(90)	300A	8A, 1/2″, 3/8″, 1/4″	152.4	200
	2 1/2″		(100)		25A, 20A,15A, 10A, 1″, 3/4″		210
80A	8A, 1/2″, 3/8″, 1/4″	50.8	85		50A, 40A, 32A		220
	25A, 20A,15A, 10A, 1 1/4″, 1″, 3/4″, 5/8″		92		100A, 80A, 65A		230
	50A, 40A, 32A, 2″, 1 1/2″		102				
	65A, 3″, 2 1/2″		(110)				
100A	8A, 1/2″, 3/8″, 1/4″	63.5	98				
	25A, 20A,15A, 10A, 1 1/4″, 1″, 3/4″, 5/8″		105				
	50A, 40A, 32A, 2″, 1 1/2″		115				
	80A, 65A, 4″, 3″, 2 1/2″		125				

* 125A(100A, 80A, 65A, 50A) / 150A(125A, 100A, 80A, [65A]) / 200A(150A, 125A, 100A) Bevel end at large dia. side.

· Dimensions are for reference only and are subject to change.

CAP REDUCER (TUBE SIZE)

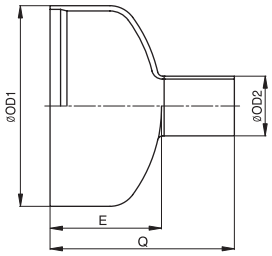

unit = mm

TUBE SIZE (Inch Size)							
OD1	OD2	E	Q	OD1	OD2	E	Q
3/4″	1/2″, 3/8″, 1/4″, 8A	19.1	54	3″	1/2″, 3/8″, 1/4″, 8A	38.1	73
	5/8″, 10A		60		1 1/4″, 1″, 3/4″, 5/8″, 25A, 20A,15A, 10A		80
1″	1/2″, 3/8″, 1/4″, 8A	25.4	60		2″, 1 1/2″, 50A, 40A, 32A		(90)
	3/4″, 5/8″, 15A, 10A		67		2 1/2″		(95)
1 1/4″	1/2″, 3/8″, 1/4 , 8A	38.1	73	4″	1/2″, 3/8″, 1/4″, 8A	63.5	98
	1″, 3/4″, 5/8″, 20A,15A, 10A		80		1 1/4″, 1″, 3/4″, 5/8″, 25A, 20A,15A, 10A		105
1 1/2″	1/2″, 3/8″, 1/4″, 8A	38.1	73		2″, 1 1/2″, 50A, 40A, 32A		115
	1 1/4″, 1″, 3/4″, 5/8″, 25A, 20A,15A, 10A		80		3″, 2 1/2″, 80A, 65A		(125)
2″	1/2″, 3/8″, 1/4″, 8A	38.1	73				
	1 1/4″, 1″, 3/4″, 5/8″, 25A, 20A,15A, 10A		80				
	1 1/2″, 40A, 32A		(90)				
2 1/2″	1/2″, 3/8″, 1/4″, 8A	38.1	73				
	1 1/4″, 1″, 3/4″, 5/8″, 25A, 20A,15A, 10A		80				
	2″, 1 1/2″, 50A, 40A, 32A		(90)				

· Dimensions are for reference only and are subject to change.

REDUCING TEE (PIPE SIZE)

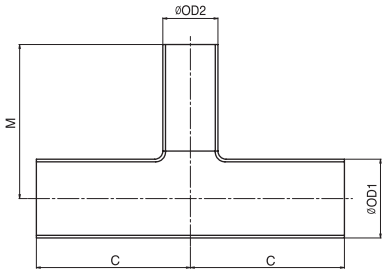

unit = mm

PIPE SIZE (A Size)

OD1	OD2	C	M
8A	1/2″, 3/8″, 1/4″	42	42
10A	8A, 1/2″, 3/8″, 1/4″	47	44
15A	8A, 1/2″, 3/8″, 1/4″	47	44
	10A, 3/4″, 5/8″	52	52
20A	8A, 1/2″, 3/8″, 1/4″	47	47
	15A, 10A, 1″, 3/4″, 5/8″	55	55
25A	8A, 1/2″, 3/8″, 1/4″	47	50
	20A, 15A, 10A, 1 1/4″, 1″, 3/4″, 5/8″	59	59
32A	8A, 1/2″, 3/8″, 1/4″	57	54
	25A, 20A, 15A, 10A, 1 1/4″, 1″, 3/4″, 5/8″	68	62
40A	8A, 1/2″, 3/8″, 1/4″	57	57
	25A, 20A, 15A, 10A, 1 1/4″, 1″, 3/4″, 5/8″	68	65
	32A, 1 1/2″	77	77
50A	8A, 1/2″, 3/8″, 1/4″	57	63
	25A, 20A, 15A, 10A, 1 1/4″, 1″, 3/4″, 5/8″	68	71
	40A, 32A, 2″, 1 1/2″	83	83
65A	8A, 1/2″, 3/8″, 1/4″	61	71
	25A, 20A, 15A, 10A, 1 1/4″, 1″, 3/4″, 5/8″	72	79
	50A, 40A, 32A, 2″, 1 1/2″	88	90
	2 1/2″	97	97
80A	8A, 1/2″, 3/8″, 1/4″	61	77
	25A, 20A, 15A, 10A, 1 1/4″, 1″, 3/4″, 5/8″	72	85
	50A, 40A, 32A, 2″, 1 1/2″	88	96
	65A, 3″, 2 1/2″	103	103
100A	8A, 1/2″, 3/8″, 1/4″	61	90
	25A, 20A, 15A, 10A, 1 1/4″, 1″, 3/4″, 5/8″	72	98
	50A, 40A, 32A, 2″, 1 1/2″	88	109
	80A, 65A, 4″, 3″, 2 1/2″	116	116
125A	8A, 1/2″, 3/8″, 1/4″	80	110
	25A, 20A, 15A, 10A, 1 1/4″, 1″, 3/4″, 5/8″	100	120
	50A, 40A, 32A, 2″, 1 1/2″	120	130
	100A, 80A, 65A, 4″, 3″, 2 1/2″	140	140
	5″	160	160
150A	8A, 1/2″, 3/8″, 1/4″	90	130
	25A, 20A, 15A, 10A, 1 1/4″, 1″, 3/4″, 5/8″	110	140
	50A, 40A, 32A, 2″, 1 1/2″	130	150
	100A, 80A, 65A, 4″, 3″, 2 1/2″	150	160
	125A, 5″	142.9	136.5
200A	8A, 1/2″, 3/8″, 1/4″	100	150
	25A, 20A, 15A, 10A, 1 1/4″, 1″, 3/4″, 5/8″	120	160
	50A, 40A, 32A, 2″, 1 1/2″	140	170
	100A, 80A, 65A, 4″, 3″, 2 1/2″	160	180
	125A	177.8	161.9
	150A	177.8	168.3
250A	8A, 1/2″, 3/8″, 1/4″	110	180
	25A, 20A, 15A, 10A, 1″, 3/4″	130	190
	50A, 40A, 32A	150	200
	100A, 80A, 65A	170	210
	125A	215.9	190.5
	150A	215.9	193.7
	200A	215.9	203.2
300A	8A, 1/2″, 3/8″, 1/4″	120	200
	25A, 20A, 15A, 10A, 1″, 3/4″	140	210
	50A, 40A, 32A	160	220
	100A, 80A, 65A	180	230
	125A	254	215.9
	150A	254	219.1
	200A	254	228.6

* 125A(100A, 80A, 65A, 50A) / 150A(125A, 100A, 80A, [65A]) / 200A(150A, 125A, 100A) Bevel end at large dia. side.

· Dimensions are for reference only and are subject to change.

REDUCING TEE (TUBE SIZE)

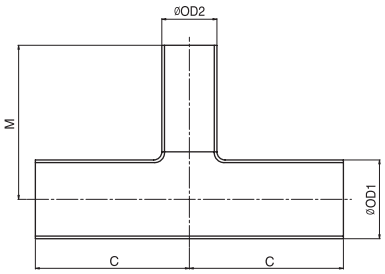

unit = mm

TUBE SIZE (Inch Size)							
OD1	OD2	C	M	OD1	OD2	C	M
3/8″	1/4″	37	37	3″	1/2″, 3/8″, 1/4″, 8A	61	71
1/2″	3/8″, 1/4″	39	39		1 1/4″, 1″, 3/4″, 5/8″, 25A, 20A, 15A, 10A	72	79
5/8″	1/2″, 3/8″, 1/4″, 8A	47	44		2″, 1 1/2″, 50A, 40A, 32A	90	90
3/4″	1/2″, 3/8″, 1/4″, 8A	47	44		2 1/2″, 65A	97	97
	5/8″, 10A	52	52	4″	1/2″, 3/8″, 1/4″, 8A	61	87
1″	1/2″, 3/8″, 1/4″, 8A	47	47		1 1/4″, 1″, 3/4″, 5/8″, 25A, 20A, 15A, 10A	72	95
	3/4″, 5/8″, 15A, 10A	55	55		2″, 1 1/2″, 50A, 40A, 32A	90	105
1 1/4″	1/2″, 3/8″, 1/4″, 8A	47	50		3″, 2 1/2″, 80A, 65A	110	110
	1″, 3/4″, 5/8″, 20A, 15A, 10A	59	59	5″	1/2″, 3/8″, 1/4″, 8A	70	100
1 1/2″	1/2″, 3/8″, 1/4″, 8A	57	54		1 1/4″, 1″, 3/4″, 5/8″, 25A, 20A, 15A, 10A	90	110
	1 1/4″, 1″, 3/4″, 5/8″, 25A, 20A, 15A, 10A	68	62		2″, 1 1/2″, 50A, 40A, 32A	110	120
2″	1/2″, 3/8″, 1/4″, 8A	57	57		4″, 3″, 2 1/2″, 100A, 80A, 65A	140	140
	1 1/4″, 1″, 3/4″, 5/8″, 25A, 20A, 15A, 10A	68	65	6″	1/2″, 3/8″, 1/4″, 8A	80	115
	1 1/2″, 40A, 32A	77	77		1 1/4″, 1″, 3/4″, 5/8″, 25A, 20A, 15A, 10A	100	125
2 1/2″	1/2″, 3/8″, 1/4″, 8A	61	63		2″, 1 1/2″, 50A, 40A, 32A	120	135
	1 1/4″, 1″, 3/4″, 5/8″, 25A, 20A, 15A, 10A	72	71		4″, 3″, 2 1/2″, 100A, 80A, 65A	140	145
	2″, 1 1/2″, 50A, 40A, 32A	90	83		5″, 125A	160	160

· Dimensions are for reference only and are subject to change.

JOINT TEE

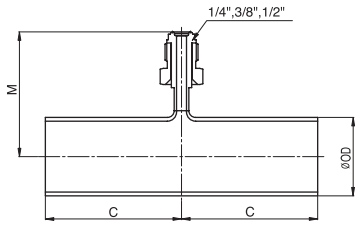

MALE TYPE

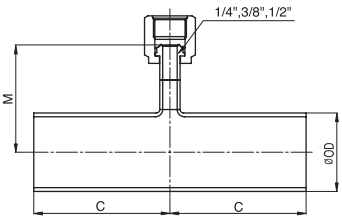

FEMALE TYPE

unit = mm

PIPE SIZE (A Size)															
OD		8A	10A	15A	20A	25A	32A	40A	50A	65A	80A	100A	125A	150A	200A
C		45	52	52	55	59	68	68	68	72	72	72	100	110	120
Female	M	35	37	39.5	42.5	46.5	51	54	60	68	74.5	87	100	113	138.5
Male	M	45	47	49.5	52.5	56.5	61	64	70	78	84.5	97	110	123	148.5
TUBE SIZE (Inch Size)															
OD		1/4″	3/8″	1/2″	5/8″	3/4″	1″	1 1/4″	1 1/2″	2″	2 1/2″	3″	4″	5″	6″
C		43	45	45	52	52	55	59	68	68	72	72	72	90	100
Female	M	31.5	33.5	35	36.5	38	42	45.5	48	55	61.5	68	81	94	107
Male	M	41.5	43.5	45	46.5	48	52	55.5	58	65	72.5	78	91	104	117

JOINT CAP

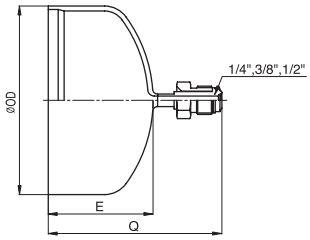

MALE TYPE

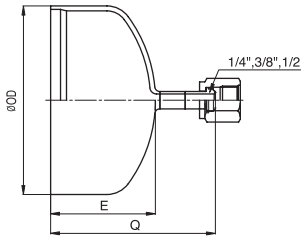

FEMALE TYPE

unit = mm

PIPE SIZE (A Size)														
OD		10A	15A	20A	25A	32A	40A	50A	65A	80A	100A	125A	150A	200A
Cap Length	E	19.1	25.4	25.4	38.1	38.1	38.1	38.1	38.1	50.8	63.5	76.2	88.9	101.6
Female	Q	48.0	55.0	55.0	68.0	68.0	68.0	68.0	68.0	81.0	94.0	107.0	120.0	133.0
Male	Q	58.0	65.0	65.0	78.0	78.0	78.0	78.0	78.0	91.0	104.0	117.0	130.0	143.0

TUBE SIZE (Inch Size)									
OD		3/4″	1″	1 1/4″	1 1/2″	2″	2 1/2″	3″	4″
Cap Length	E	19.1	25.4	38.1	38.1	38.1	38.1	38.1	63.5
Female	Q	48.0	55.0	68.0	68.0	68.0	68.0	68.0	94.0
Male	Q	58.0	65.0	78.0	78.0	78.0	78.0	78.0	104.0

· Dimensions are for reference only and are subject to change.

JOINT REDUCER

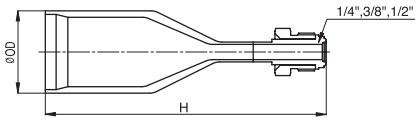

MALE TYPE

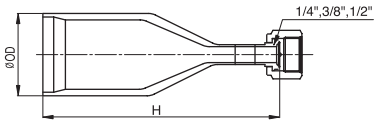

FEMALE TYPE

unit = mm

PIPE SIZE (A Size)						
OD		8A	10A	15A	20A	25A
Female	H	90	100	110	115	130
Male	H	100	110	120	125	140
TUBE SIZE (Inch Size)						
OD		3/8″	1/2″	5/8″	3/4″	1″
Female	H	80	85	100	110	115
Male	H	90	95	110	120	125

MULTI-HEADER TEE

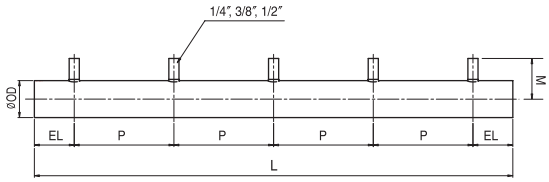

unit = mm

PIPE SIZE (A Size)													
OD			8A	10A	15A	20A	25A	32A	40A	50A	65A	80A	100A
Length at End		EL	60								70		
Pitch		P	125								145		
Total Length (L)	Number of Branches	2	245								285		
		3	370								430		
		4	495								575		
		5	620								720		
Branch Tube Height	Tube-End (M)		42	44	44	47	50	54	57	63	71	77	90
	Female (M)		35	37	39.5	42.5	46.5	51	54	60	68	74.5	87
TUBE SIZE (Inch Size)													
OD			1/4″	3/8″	1/2″	5/8″	3/4″	1″	1 1/4″	1 1/2″	2″	2 1/2″	3″	4″
Length at End		EL	76.2											
Pitch		P	152.4											
Total Length (L)	Number of Branches	2	304.8											
		3	457.2											
		4	609.6											
		5	762.0											
Branch Tube Height	Tube-End (M)		35	37	39	44	44	47	50	54	57	63	71	87
	Female (M)		31.5	33.5	35	36.5	38	42	45.5	48	55	61.5	68	81

· Dimensions are for reference only and are subject to change.

MULTI-HEADER JOINT TEE

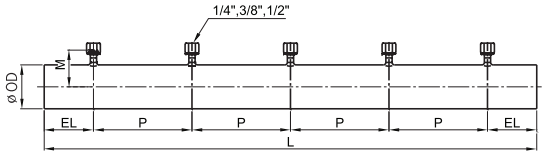

unit = mm

PIPE SIZE (A Size)													
OD			8A	10A	15A	20A	25A	32A	40A	50A	65A	80A	100A
Length at End		EL	23	29	31	34	42	46	49	60	68	74.5	87
Pitch		P	125								145		
Total Length	Number of Branches	2	245								285		
		3	370								430		
		4	495								575		
		5	620								720		
Branch Tube Height	Tube-End		42	44	44	47	50	54	57	63	71	77	90
	Female		35	37	39.5	42.5	46.5	51	54	60	68	74.5	87

TUBE SIZE (Inch Size)														
OD			1/4″	3/8″	1/2″	5/8″	3/4″	1″	1 1/4″	1 1/2″	2″	2 1/2″	3″	4″
Length at End		EL	21	21	21	27	30	33	40	45	50	65	68	86
Pitch		P	154.4											
Total Length	Number of Branches	2	304.8											
		3	457.2											
		4	609.6											
		5	762.0											
Branch Tube Height	Tube-End		35	37	39	44	44	47	50	54	57	63	71	87
	Female		31.5	33.5	35	36.5	38	42	45.5	48	55	61.5	68	81

SPECIAL CLEAN SPOOL HEADER ASSEMBLY

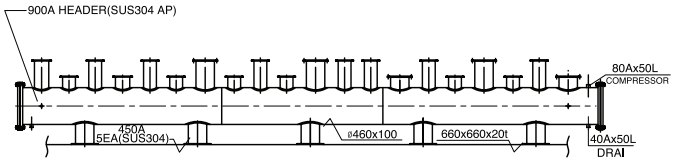

Clean Header Structure Analysis Modelling Display

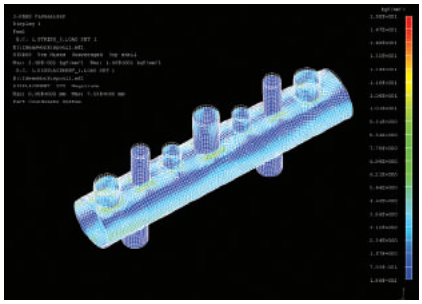

Spool Visualizer Display 1

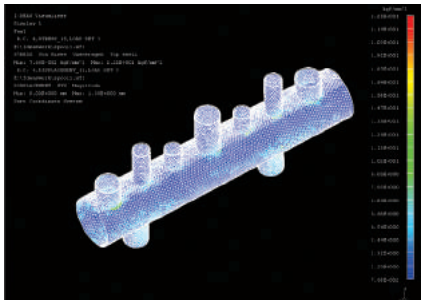

Spool Visualizer Display 2

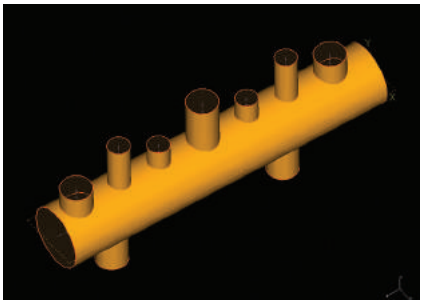

Spool Visualizer Display 3

· Dimensions are for reference only and are subject to change.

FLANGE CONNECTION

- LAP JOINT
- PIPE FLANGE
- JIS RF FLANGE / JIS BLIND FLANGE
- TEFLON GASKET

LAP JOINT

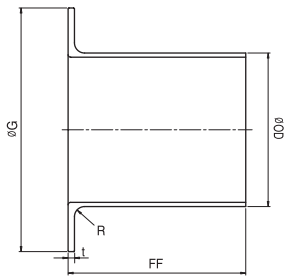

unit = mm

PIPE SIZE (A Size)															
OD		10A	15A	20A	25A	32A	40A	50A	65A	80A	100A	125A	150A	200A	250A	300A
FF		55	55	55	55	70	70	70	75	75	75	50	50	65	65	65
G	JIS 10K	46	51	56	67	76	81	96	116	126	151	182	212	262	324	368
	JIS 5K	39	44	49	59	70	75	85	110	121	141	182	212	262	324	368
R		3	3	3	3	3	3	4	4	5	5	5	5	5	5	5
t		2.5	2.5	2.5	2.5	2.5	2.5	2.5	2.5	2.5	2.5	5	5	7	7	9

TUBE SIZE (Inch Size)										
OD	3/4″	1″	1 1/4″	1 1/2″	2″	2 1/2″	3″	4″	5″	6″
FF	55	55	55	70	70	70	75	75	85	90
G	51	56	67	76	81	96	116	136	182	212
R	3	3	3	3	3	4	4	5	5	5
t	2.5	2.5	2.5	2.5	2.5	2.5	2.5	2.5	3	3

PIPE FLANGE

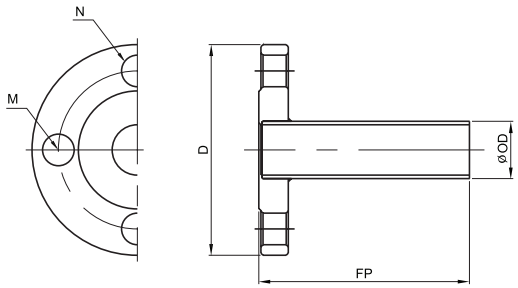

unit = mm

PIPE SIZE (A Size)															
OD	10A	15A	20A	25A	32A	40A	50A	65A	80A	100A	125A	150A	200A	250A	300A
FP	100	100	100	100	100	100	100	100	100	100	200	200	200	200	200
D	90	95	100	125	135	140	155	175	185	210	250	280	330	400	445
N	4	4	4	4	4	4	4	4	8	8	8	8	12	12	16
M	M12	M12	M12	M16	M16	M16	M16	M16	M16	M16	M20	M20	M20	M22	M22

TUBE SIZE (Inch Size)										
OD	3/4″	1″	1 1/4″	1 1/2″	2″	2 1/2″	3″	4″	5″	6″
FP	100	100	100	100	100	100	100	100	200	200
D	95	100	125	135	140	155	175	195	250	280
N	4	4	4	4	4	4	4	8	8	8
M	M12	M12	M16	M16	M16	M16	M16	M16	M20	M20

· Dimensions are for reference only and are subject to change.

JIS RF FLANGE / JIS BLIND FLANGE

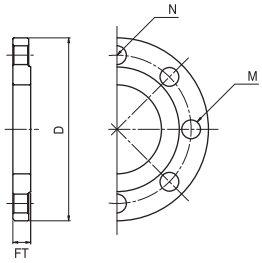

JIS RF FLANGE

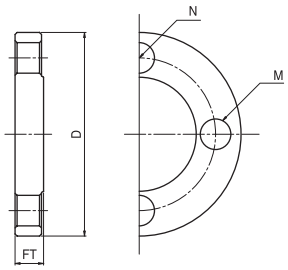

JIS BLIND FLANGE

unit = mm

PIPE SIZE (A Size)															
JIS 10K															
OD	10A	15A	20A	25A	32A	40A	50A	65A	80A	100A	125A	150A	200A	250A	300A
D	90	95	100	125	135	140	155	175	185	210	250	280	330	400	445
FT	12	12	14	14	16	16	16	18	18	18	20	22	22	24	24
N	4	4	4	4	4	4	4	4	8	8	8	8	12	12	16
M	M12	M12	M12	M16	M16	M16	M16	M16	M16	M16	M20	M20	M20	M22	M22
JIS 5K															
OD	10A	15A	20A	25A	32A	40A	50A	65A	80A	100A	125A	150A	200A	250A	300A
D	75	80	85	95	115	120	130	155	180	200	235	265	320	385	430
FT	9	9	10	10	12	12	14	14	14	16	16	18	20	22	22
N	4	4	4	4	4	4	4	4	4	8	8	8	8	12	12
M	M10	M10	M10	M10	M12	M12	M12	M12	M16	M16	M16	M16	M20	M20	M20

TUBE SIZE (Inch Size)										
OD	3/4″	1″	1 1/4″	1 1/2″	2″	2 1/2″	3″	4″	5″	6″
D	95	100	125	135	140	155	175	195	250	280
FT	12	14	14	16	16	16	18	18	20	22
N	4	4	4	4	4	4	4	8	8	8
M	M12	M12	M16	M16	M16	M16	M16	M16	M20	M20

TEFLON GASKET

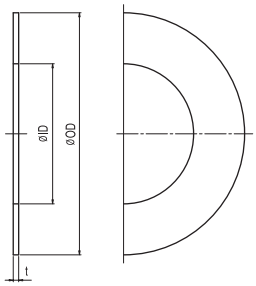

Thickness t=2mm, unit = mm

PIPE SIZE (A Size)															
JIS 10K															
D	10A	15A	20A	25A	32A	40A	50A	65A	80A	100A	125A	150A	200A	250A	300A
OD	53	58	63	74	84	89	104	124	134	159	190	220	270	333	378
ID	18	22	28	35	43	49	61	77	90	115	141	167	218	270	321
JIS 5K															
D	10A	15A	20A	25A	32A	40A	50A	65A	80A	100A	125A	150A	200A	250A	300A
OD	45	50	55	65	78	83	93	118	129	149	184	214	260	325	370
ID	18	22	28	35	43	49	61	77	90	115	141	167	218	270	321

TUBE SIZE (Inch Size)										
D	3/4″	1″	1 1/4″	1 1/2″	2″	2 1/2″	3″	4″	5″	6″
OD	58	63	74	84	89	104	124	144	190	220
ID	19.5	26	32.5	38.5	51.5	64	77	102.5	128	153.5

· Dimensions are for reference only and are subject to change.

COAXIAL DOUBLE FITTINGS

- COAXIAL DOUBLE TUBE
- COAXIAL DOUBLE 90° ELBOW
- COAXIAL DOUBLE 45° ELBOW
- COAXIAL DOUBLE EQUAL TEE
- COAXIAL DOUBLE REDUCING TEE
- COAXIAL DOUBLE CONCENTRIC REDUCER
- COAXIAL JOINT TEE (MALE/FEMALE)
- COAXIAL DOUBLE JOINT TEE (MALE/FEMALE)
- COAXIAL SLEEVE
- COAXIAL DOUBLE FACE SEAL WELD GLAND (MALE/FEMALE)
- COAXIAL TERMINATOR
- COAXIAL BULKHEAD FITTING ASSEMBLY

COAXIAL DOUBLE TUBE

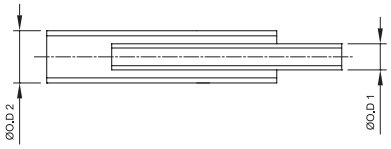

unit = mm

TUBE SIZE	Inner Tube ØO.D 1	Outer Tube ØO.D 2	Maximum Safe Working Pressure*	
			PSI	Bar
1/4"	1/4" x 0.89t/1t	1/2" x 1.24t	3,136	216
3/8"	3/8" x 0.89t/1t	5/8" x 1.24t	2,477	171
1/2"	1/2" x 1.24t	3/4" x 1.65t	2,759	190
3/4"	3/4" x 1.65t	1" x 1.65t	1,631	112
1"	1" x 1.65t	1 1/4" x 1.65t	1,294	89
1 1/2"	1 1/2" x 1.65t	2" x 1.65t	796	55

COAXIAL DOUBLE 90° ELBOW

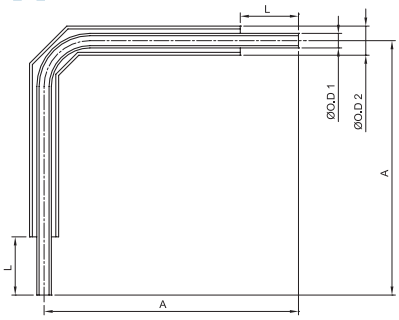

unit = mm

TUBE SIZE	Inner Tube ØO.D 1	ØO.D 1 Wall Thickness	Outer Tube ØO.D 2	ØO.D 2 Wall Thickness	L	A
1/4"	1/4"	0.89t/1t	1/2"	1.24t	25.4	111
3/8"	3/8"	0.89t/1t	5/8"	1.24t	25.4	104.6
1/2"	1/2"	1.24t	3/4"	1.65t	25.4	108
3/4"	3/4"	1.65t	1"	1.65t	44.5	171.5
1"	1"	1.65t	1 1/4"	1.65t	44.5	180.8
1 1/2"	1 1/2"	1.65t	2"	1.65t	50.8	212.6

COAXIAL DOUBLE 45° ELBOW

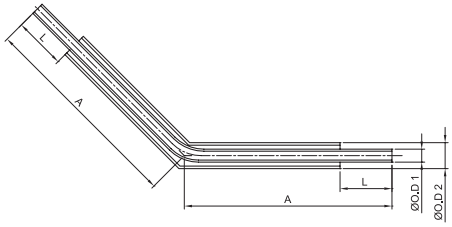

unit = mm

TUBE SIZE	Inner Tube ØO.D 1	ØO.D 1 Wall Thickness	Outer Tube ØO.D 2	ØO.D 2 Wall Thickness	L	A
1/4"	1/4"	0.89t/1t	1/2"	1.24t	25.4	101.6
3/8"	3/8"	0.89t/1t	5/8"	1.24t	25.4	98.3
1/2"	1/2"	1.24t	3/4"	1.65t	25.4	98.3
3/4"	3/4"	1.65t	1"	1.65t	44.5	155.4
1"	1"	1.65t	1 1/4"	1.65t	44.5	158.8
1 1/2"	1 1/2"	1.65t	2"	1.65t	50.8	180.8

COAXIAL DOUBLE EQUAL TEE

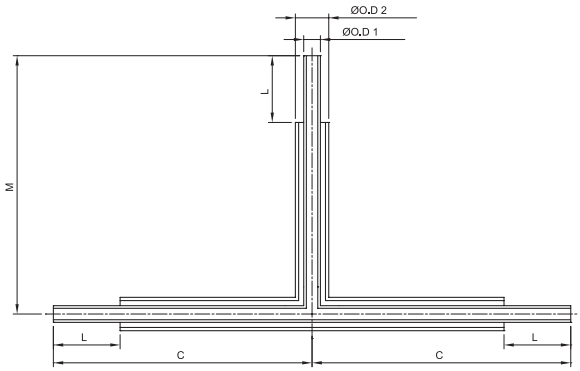

unit = mm

TUBE SIZE	Inner Tube ØO.D 1	ØO.D 1 Wall Thickness	Outer Tube ØO.D 2	Outer Tube Wall Thickness	L	C	M
1/4"	1/4"	0.89t/1t	1/2"	1.24t	25.4	98.4	98.4
3/8"	3/8"	0.89t/1t	5/8"	1.24t	25.4	101.6	101.6
1/2"	1/2"	1.24t	3/4"	1.65t	25.4	101.6	101.6
3/4"	3/4"	1.65t	1"	1.65t	44.5	161.9	161.9
1"	1"	1.65t	1 1/4"	1.65t	44.5	165.1	165.1
1 1/2"	1 1/2"	1.65t	2"	1.65t	50.8	193.7	193.7

COAXIAL DOUBLE REDUCING TEE

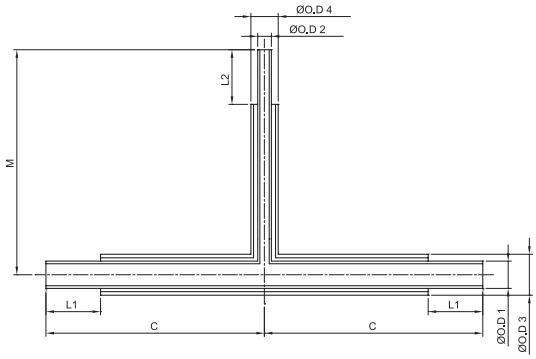

unit = mm

TUBE SIZE	Inner Tube ØO.D 1	ØO.D 1 Wall Thickness	Inner Tube ØO.D 2	ØO.D 2 Wall Thickness	x	Outer Tube ØO.D 3	ØO.D 3 Wall Thickness	Outer Tube ØO.D 4	ØO.D 4 Wall Thickness	L1	C	L2	M
3/8"x1/4"	3/8"	0.89t/1t	1/4"	0.89t/1t	x	5/8"	1.24t	1/2"	1.24t	25.4	98.4	25.4	104.6
1/2"x1/4"	1/2"	1.24t	1/4"	0.89t/1t	x	3/4"	1.65t	1/2"	1.24t	25.4	98.4	25.4	104.6
1/2"x3/8"	1/2"	1.24t	3/8"	0.89t/1t	x	3/4"	1.65t	5/8"	1.24t	25.4	101.6	25.4	104.6
3/4"x1/4"	3/4"	1.65t	1/4"	0.89t/1t	x	1"	1.65t	1/2"	1.24t	44.5	155.6	25.4	108
3/4"x3/8"	3/4"	1.65t	3/8"	0.89t/1t	x	1"	1.65t	5/8"	1.24t	44.5	158.8	25.4	108
3/4"x1/2"	3/4"	1.65t	1/2"	1.24t	x	1"	1.65t	3/4"	1.65t	44.5	158.8	25.4	108
1"x1/4"	1"	1.65t	1/4"	0.89t/1t	x	1 1/4"	1.65t	1/2"	1.24t	44.5	155.6	25.4	111
1"x3/8"	1"	1.65t	3/8"	0.89t/1t	x	1 1/4"	1.65t	5/8"	1.24t	44.5	158.8	25.4	111
1"x1/2"	1"	1.65t	1/2"	1.24t	x	1 1/4"	1.65t	3/4"	1.65t	44.5	158.8	25.4	111
1"x3/4"	1"	1.65t	3/4"	1.65t	x	1 1/4"	1.65t	1"	1.65t	44.5	161.9	44.5	168.2
1 1/2"x3/4"	1 1/2"	1.65t	3/4"	1.65t	x	2"	1.65t	1"	1.65t	50.8	181	44.5	177.8
1 1/2"x1"	1 1/2"	1.65t	1"	1.65t	x	2"	1.65t	1 1/4"	1.65t	50.8	184.2	44.5	177.8

COAXIAL DOUBLE CONCENTRIC REDUCER

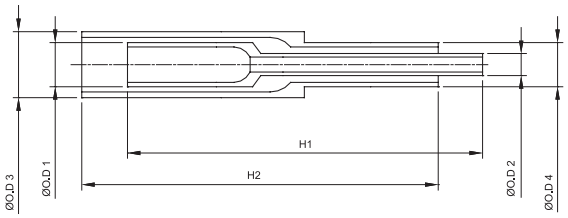

unit = mm

TUBE SIZE	Inner Tube ØO.D 1	ØO.D 1 Wall Thickness	Inner Tube ØO.D 2	ØO.D 2 Wall Thickness	x	Outer Tube ØO.D 3	ØO.D 3 Wall Thickness	Outer Tube ØO.D 4	ØO.D 4 Wall Thickness	H1	H2
3/8"X1/4"	3/8"	0.89t/1t	1/4"	0.89t/1t	x	5/8"	1.24t	1/2"	1.24t	101.6	101.6
1/2"X1/4"	1/2"	1.24t	1/4"	0.89t/1t	x	3/4"	1.65t	1/2"	1.24t	101.6	101.6
1/2"X3/8"	1/2"	1.24t	3/8"	0.89t/1t	x	3/4"	1.65t	5/8"	1.24t	101.6	101.6
3/4"X1/4"	3/4"	1.65t	1/4"	0.89t/1t	x	1"	1.65t	1/2"	1.24t	127	146
3/4"X3/8"	3/4"	1.65t	3/8"	0.89t/1t	x	1"	1.65t	5/8"	1.24t	127	146
3/4"X1/2"	3/4"	1.65t	1/2"	1.24t	x	1"	1.65t	3/4"	1.65t	127	146
1"X1/4"	1"	1.65t	1/4"	0.89t/1t	x	1 1/4"	1.65t	1/2"	1.24t	127	146
1"X3/8"	1"	1.65t	3/8"	0.89t/1t	x	1 1/4"	1.65t	5/8"	1.24t	127	146
1"X1/2"	1"	1.65t	1/2"	1.24t	x	1 1/4"	1.65t	3/4"	1.65t	127	146
1"X3/4"	1"	1.65t	3/4"	1.65t	x	1 1/4"	1.65t	1"	1.65t	165.1	165.1
1 1/2"X1/4"	1 1/2"	1.65t	1/4"	0.89t/1t	x	2"	1.65t	1/2"	1.24t	146	171.5
1 1/2"X3/8"	1 1/2"	1.65t	3/8"	0.89t/1t	x	2"	1.65t	5/8"	1.24t	146	171.5
1 1/2"X1/2"	1 1/2"	1.65t	1/2"	1.24t	x	2"	1.65t	3/4"	1.65t	146	171.5
1 1/2"X3/4"	1 1/2"	1.65t	3/4"	1.65t	x	2"	1.65t	1"	1.65t	184.2	190.5
1 1/2"X1"	1 1/2"	1.65t	1"	1.65t	x	2"	1.65t	1 1/4"	1.65t	184.2	190.5

COAXIAL JOINT TEE (MALE/FEMALE)

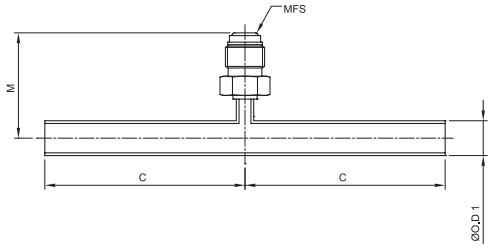

unit = mm

TUBE SIZE	ØO.D 1	ØO.D 1 Wall Thickness	C	M	MFS
1/4"	1/2"	1.24t	73	38.4	1/4"
3/8"	5/8"	1.24t	76.2	39.9	
1/2"	3/4"	1.65t	76.2	41.2	
3/4"	1"	1.65t	117.5	44.2	
1"	1 1/4"	1.65t	120.6	47.5	
1 1/2"	2"	1.65t	142.9	57.2	

COAXIAL DOUBLE JOINT TEE (MALE/FEMALE)

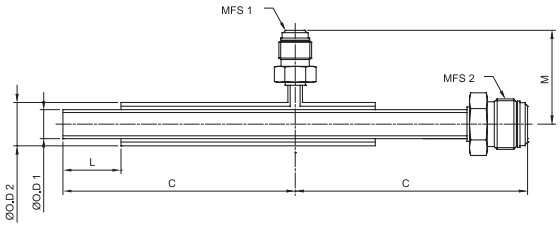

unit = mm

TUBE SIZE	ØO.D 1	ØO.D 1 Wall Thickness	ØO.D 2	ØO.D 2 Wall Thickness	L	C	M	MFS 1	MFS 2
1/4"	1/4"	0.89t/1t	1/2"	1.24t	25.4	98.4	38.4	1/4"	1/4"
3/8"	3/8"	0.89t/1t	5/8"	1.24t	25.4	101.6	39.9	1/4"	1/2"
1/2"	1/2"	1.24t	3/4"	1.65t	25.4	101.6	41.2	1/4"	1/2"

COAXIAL SLEEVE

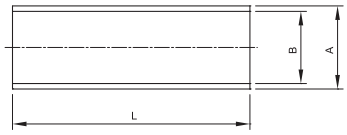

unit = mm

TUBE SIZE	A	B	L	L(E4*)	L(E5*)	L(E6*)
1/4"	5/8"	Ø12.8/Ø12.9	63.5	101.6	127	152.4
3/8"	3/4"	Ø16/Ø16.1	63.5	101.6	127	152.4
1/2"	7/8"	Ø19.2/Ø19.3	63.5	101.6	127	152.4
3/4"	1 1/8"	Ø25.5/Ø25.6	101.6	N/A	127	152.4
1"	1 3/8"	Ø31.9/Ø32	101.6	N/A	N/A	N/A
1 1/2"	2 1/8"	Ø51.3/Ø51.4	114.3	N/A	N/A	N/A

*Extra Length

COAXIAL DOUBLE FACE SEAL WELD GLAND (MALE/FEMALE)

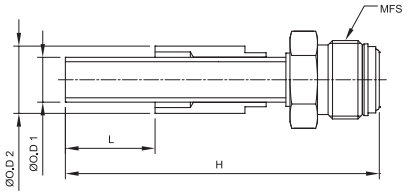

unit = mm

TUBE SIZE	ØO.D 1	ØO.D 1 Wall Thickness	ØO.D 2	ØO.D 2 Wall Thickness	L	H	MFS
1/4"	1/4"	0.89t/1t	1/2"	1.24t	25.4	88.9	1/4"
3/8"	3/8"	0.89t/1t	5/8"	1.24t	25.4	88.9	1/2"
1/2"	1/2"	1.24t	3/4"	1.65t	25.4	88.9	1/2"

COAXIAL TERMINATOR

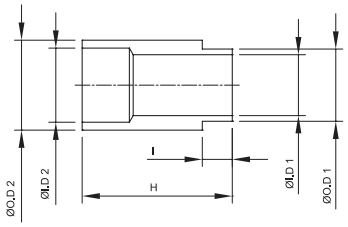

unit = mm

TUBE SIZE	ØO.D 1	ØI.D 1	ØO.D 2	ØI.D 2	I	H
1/4"	Ø8.3	1/4"	1/2"	Ø10.2	6.35	31.8
3/8"	Ø11.4	3/8"	5/8"	Ø13.4	6.35	31.8
1/2"	Ø15.3	1/2"	3/4"	Ø15.7	6.35	31.8
3/4"	Ø22.5	3/4"	1"	Ø22.1	6.35	50.8
1"	Ø28.8	1"	1 1/4"	Ø28.4	6.35	50.8
1 1/2"	Ø41.5	1 1/2"	2"	Ø47.4	6.35	57.2

COAXIAL BULKHEAD FITTING ASSEMBLY

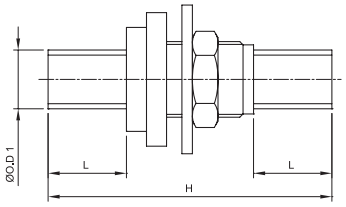

unit = mm

TUBE SIZE	ØO.D 1	ØO.D 1 Wall Thickness	L	H	HEX. NUT
1/4"	1/2"	1.24t	25.4	92	3/4"-16UNF
3/8"	5/8"	1.24t	25.4	92	7/8"-14UNF
1/2"	3/4"	1.65t	25.4	92	1 1/16"-12UN
3/4"	1"	1.65t	44.5	130	1 5/16"-12UN
1"	1 1/2"	1.65t	44.5	130	1 5/8"-12UN

CGA Series(Cylinder Connection)

CGA DISS / CGA / DIN / JIS

TK-FUJIKIN CORPORATION

Fujikin Carp Group

CONTENTS

CGA DISS SERIES

NIPPLES - 10 Series
316L Stainless Steel.
Non-rotating design.
Heat code traceability.

NUTS - 20 Series
303 Stainless Steel Silver Plated.

GASKETS - 30 Series
Nickel 200/PCTFE/Aluminum.
Retainer ring included.

INLET CONNECTIONS - 40 Series
Nipple, Nut and Gasket included.

OUTLET BLANK PLUGS - 50 Series
316L Stainless Steel.
Non-rotating design.

OUTLET ADAPTERS - 70 Series
316L Stainless Steel.
Non-rotating design.

CYLINDER VALVE OUTLET CAPS - 90 Series
316L Stainless Steel.
Chain, Ring and Gasket included.
Gas tight design.

COMPLETE PIGTAIL CONNECTIONS - 100 Series
Nipple, Nut, Gasket and Blank Plug included.

CGA & DIN / JIS SERIES

NIPPLES - 10 Series
316L Stainless Steel.

NUTS - 20 Series
303 Stainless Steel.

WASHERS - 30 Series
Washers available in PCTFE and PTFE.

INLET CONNECTIONS - 40 Series
Nipple, Nut and Washer included.

OUTLET BLANK PLUGS - 50 Series
316L Stainless Steel.

OUTLET BLANK CAPS - 60 Series
316L Stainless Steel.

OUTLET ADAPTERS - 70 Series
316L Stainless Steel.

CYLINDER VALVE OUTLET PLUGS - 80 Series
303 Stainless Steel.
Chain and Ring included.

CYLINDER VALVE OUTLET CAPS - 90 Series
303 Stainless Steel.
Chain, Ring and Polyethylene disc included.

COMPLETE PIGTAIL CONNECTIONS - 100 Series
Nipple, Nut, Washer and Blank Plug or Cap included.

GAS CONNECTION ASSIGNMENT TABLE

TBW AND METAL FACE SEAL FITTINGS

components are ordered by product code as listed in this catalogue

ORDERING INFORMATION

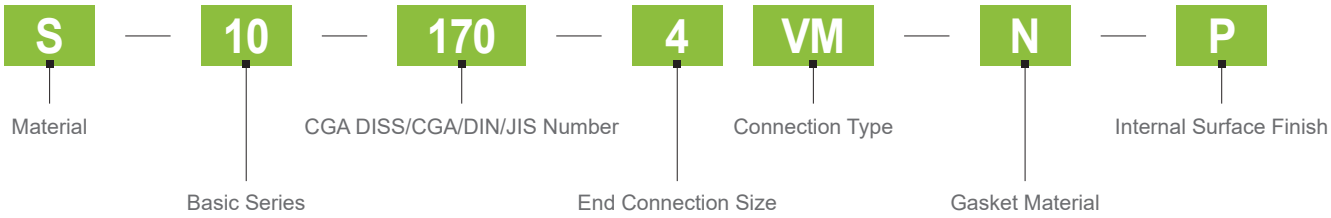

Material	Basic Series	CGA DISS/CGA/DIN/JIS Number
S = 316L Stainless Steel	10 = Nipples	Reference Gas Connection Assignment Table
D = 316L Stainless Steel VAR	20 = Nuts	
3S = 303 Stainless Steel	30 = Gaskets & Washers	
SS = 303 Stainless Steel Silver Plated	40 = Inlet Connection *Nipple, Nut and Gasket *Nipple, Nut and Washer	
N = Nickel 200	50 = Outlet Blank Plugs	
PC = PCTFE	60 = Outlet Blank Caps	
T = PTFE	70 = Outlet Adapters	
AL = Aluminum	80 = Cylinder Valve Outlet Plugs *Chain and Ring included	
	90 = Cylinder Valve Outlet Caps *Chain, Ring and Gasket included *Chain, Ring and Polyethylene disc included	
	100 = Complete Pigtail Connections *Nipple, Nut, Gasket and Blank Plug *Nipple, Nut, Washer and Blank Plug or Cap	

End Connection Size	Connection Type	Gasket Material	Internal Surface Finish (Ry)
2 = 1/8"	TW = Auto Tube Weld	N = Nickel 200	BLANK = 3.0μm
4 = 1/4"	VM = MFS Male	PC = PCTFE	P = 0.7μm
	NM = NPT Male	T = PTFE	
	NF = NPT Female	AL = Aluminum	
		PD = Polyethylene disc	

CGA DISS Series

CGA DISS SERIES

INLET CONNECTIONS (NIPPLE, NUT AND GASKET INCLUDED)

AUTO TUBE WELD

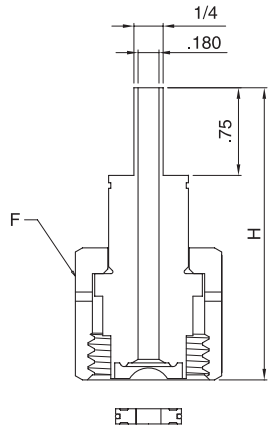

FACESEAL MALE

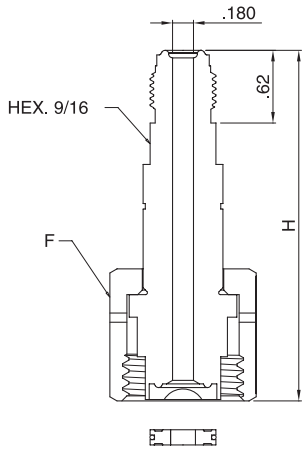

NPT MALE

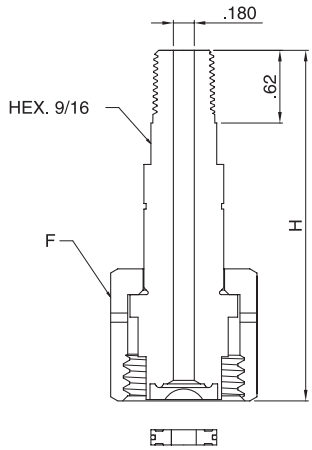

CGA DISS Number	End Connection	Assembly Part Number	H Overall Length		Nipple Part Number	Nut Part Number	F Hex Flat	Gasket Part Number (Nickel)	Gasket Part Number (PCTFE)	Gasket Part Number (Aluminum)
			in	mm						
632	1/4" Auto Tube Weld 1/4" Faceseal Male 1/4" NPT Male	□-40-632-4TW-□-□ □-40-632-4VM-□-□ □-40-632-4NM-□-□	2.50 3.00 3.00	63.5 76.2 76.2	□-10-632-4TW-□ □-10-632-4VM-□ □-10-632-4NM-□	SS-20-630	1-1/4	N-30-630	PC-30-630	AL-30-630
634	1/4" Auto Tube Weld 1/4" Faceseal Male 1/4" NPT Male	□-40-634-4TW-□-□ □-40-634-4VM-□-□ □-40-634-4NM-□-□	2.50 3.00 3.00	63.5 76.2 76.2	□-10-634-4TW-□ □-10-634-4VM-□ □-10-634-4NM-□	SS-20-630	1-1/4	N-30-630	PC-30-630	AL-30-630
636	1/4" Auto Tube Weld 1/4" Faceseal Male 1/4" NPT Male	□-40-636-4TW-□-□ □-40-636-4VM-□-□ □-40-636-4NM-□-□	2.50 3.00 3.00	63.5 76.2 76.2	□-10-636-4TW-□ □-10-636-4VM-□ □-10-636-4NM-□	SS-20-630	1-1/4	N-30-630	PC-30-630	AL-30-630
638	1/4" Auto Tube Weld 1/4" Faceseal Male 1/4" NPT Male	□-40-638-4TW-□-□ □-40-638-4VM-□-□ □-40-638-4NM-□-□	2.50 3.00 3.00	63.5 76.2 76.2	□-10-638-4TW-□ □-10-638-4VM-□ □-10-638-4NM-□	SS-20-630	1-1/4	N-30-630	PC-30-630	AL-30-630
640	1/4" Auto Tube Weld 1/4" Faceseal Male 1/4" NPT Male	□-40-640-4TW-□-□ □-40-640-4VM-□-□ □-40-640-4NM-□-□	2.50 3.00 3.00	63.5 76.2 76.2	□-10-640-4TW-□ □-10-640-4VM-□ □-10-640-4NM-□	SS-20-630	1-1/4	N-30-630	PC-30-630	AL-30-630
642	1/4" Auto Tube Weld 1/4" Faceseal Male 1/4" NPT Male	□-40-642-4TW-□-□ □-40-642-4VM-□-□ □-40-642-4NM-□-□	2.50 3.00 3.00	63.5 76.2 76.2	□-10-642-4TW-□ □-10-642-4VM-□ □-10-642-4NM-□	SS-20-630	1-1/4	N-30-630	PC-30-630	AL-30-630
712	1/4" Auto Tube Weld 1/4" Faceseal Male 1/4" NPT Male	□-40-712-4TW-□-□ □-40-712-4VM-□-□ □-40-712-4NM-□-□	2.50 3.00 3.00	63.5 76.2 76.2	□-10-712-4TW-□ □-10-712-4VM-□ □-10-712-4NM-□	SS-20-710	1-3/8	N-30-630	PC-30-630	AL-30-630
714	1/4" Auto Tube Weld 1/4" Faceseal Male 1/4" NPT Male	□-40-714-4TW-□-□ □-40-714-4VM-□-□ □-40-714-4NM-□-□	2.50 3.00 3.00	63.5 76.2 76.2	□-10-714-4TW-□ □-10-714-4VM-□ □-10-714-4NM-□	SS-20-710	1-3/8	N-30-630	PC-30-630	AL-30-630
716	1/4" Auto Tube Weld 1/4" Faceseal Male 1/4" NPT Male	□-40-716-4TW-□-□ □-40-716-4VM-□-□ □-40-716-4NM-□-□	2.50 3.00 3.00	63.5 76.2 76.2	□-10-716-4TW-□ □-10-716-4VM-□ □-10-716-4NM-□	SS-20-710	1-3/8	N-30-630	PC-30-630	AL-30-630

CGA DISS SERIES

INLET CONNECTIONS (NIPPLE, NUT AND GASKET INCLUDED) CONTINUED FROM PREVIOUS PAGE

CGA DISS Number	End Connection	Assembly Part Number	H Overall Length		Nipple Part Number	Nut Part Number	F Hex Flat	Gasket Part Number (Nickel)	Gasket Part Number (PCTFE)	Gasket Part Number (Aluminum)
			in	mm						
718	1/4" Auto Tube Weld 1/4"Faceseal Male 1/4" NPT Male	□-40-718-4TW-□-□ □-40-718-4VM-□-□ □-40-718-4NM-□-□	2.50 3.00 3.00	63.5 76.2 76.2	□-10-718-4TW-□ □-10-718-4VM-□ □-10-718-4NM-□	SS-20-710	1-3/8	N-30-630	PC-30-630	AL-30-630
720	1/4"Auto Tube Weld 1/4"Faceseal Male 1/4" NPT Male	□-40-720-4TW-□-□ □-40-720-4VM-□-□ □-40-720-4NM-□-□	2.50 3.00 3.00	63.5 76.2 76.2	□-10-720-4TW-□ □-10-720-4VM-□ □-10-720-4NM-□	SS-20-710	1-3/8	N-30-630	PC-30-630	AL-30-630
722	1/4" Auto Tube Weld 1/4" Faceseal Male 1/4" NPT Male	□-40-722-4TW-□-□ □-40-722-4VM-□-□ □-40-722-4NM-□-□	2.50 3.00 3.00	63.5 76.2 76.2	□-10-722-4TW-□ □-10-722-4VM-□ □-10-722-4NM-□	SS-20-710	1-3/8	N-30-630	PC-30-630	AL-30-630
724	1/4" Auto Tube Weld 1/4" Faceseal Male 1/4" NPT Male	□-40-724-4TW-□-□ □-40-724-4VM-□-□ □-40-724-4NM-□-□	2.50 3.00 3.00	63.5 76.2 76.2	□-10-724-4TW-□ □-10-724-4VM-□ □-10-724-4NM-□	SS-20-710	1-3/8	N-30-630	PC-30-630	AL-30-630
726	1/4" Auto Tube Weld 1/4" Faceseal Male 1/4" NPT Male	□-40-726-4TW-□-□ □-40-726-4VM-□-□ □-40-726-4NM-□-□	2.50 3.00 3.00	63.5 76.2 76.2	□-10-726-4TW-□ □-10-726-4VM-□ □-10-726-4NM-□	SS-20-710	1-3/8	N-30-630	PC-30-630	AL-30-630
728	1/4" Auto Tube Weld 1/4" Faceseal Male 1/4" NPT Male	□-40-728-4TW-□-□ □-40-728-4VM-□-□ □-40-728-4NM-□-□	2.50 3.00 3.00	63.5 76.2 76.2	□-10-728-4TW-□ □-10-728-4VM-□ □-10-728-4NM-□	SS-20-710	1-3/8	N-30-630	PC-30-630	AL-30-630

GASKETS (CGA DISS 632~728)

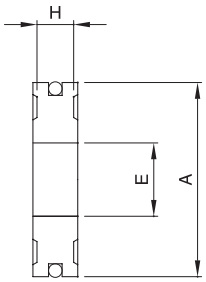

Gasket Part Number	Material	A		E		H	
		in	mm	in	mm	in	mm
N-30-630	Nickel 200	.563	14.3	.213	5.4	.105	2.7
PC-30-630	PCTFE	.563	14.3	.213	5.4	.125	3.2
AL-30-630	Aluminum	.563	14.3	.213	5.4	.105	2.7

CGA DISS SERIES

OUTLET ADAPTERS AND BLANK PLUGS

BLANK PLUG

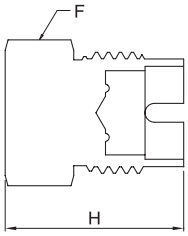

FACESEAL MALE

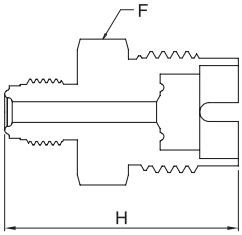

NPT FEMALE

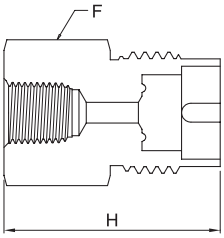

CGA DISS Number	End Connection	Part Number	H Overall Length		F Hex Flat
			in	mm	
632	Blank Plug 1/4" Faceseal Male 1/4" NPT Female	□-50-632-□ □-70-632-4VM-□ □-70-632-4NF-□	1.53 2.00 1.85	38.9 50.8 47.0	1-1/8
634	Blank Plug 1/4" Faceseal Male 1/4" NPT Female	□-50-632-□ □-70-634-4VM-□ □-70-634-4NF-□	1.53 2.00 1.85	38.9 50.8 47.0	1-1/8
636	Blank Plug 1/4" Faceseal Male 1/4" NPT Female	□-50-632-□ □-70-636-4VM-□ □-70-636-4NF-□	1.53 2.00 1.85	38.9 50.8 47.0	1-1/8
638	Blank Plug 1/4" Faceseal Male 1/4" NPT Female	□-50-632-□ □-70-638-4VM-□ □-70-638-4NF-□	1.53 2.00 1.85	38.9 50.8 47.0	1-1/8
640	Blank Plug 1/4" Faceseal Male 1/4" NPT Female	□-50-632-□ □-70-640-4VM-□ □-70-640-4NF-□	1.53 2.00 1.85	38.9 50.8 47.0	1-1/8
642	Blank Plug 1/4" Faceseal Male 1/4" NPT Female	□-50-632-□ □-70-642-4VM-□ □-70-642-4NF-□	1.53 2.00 1.85	38.9 50.8 47.0	1-1/8
712	Blank Plug 1/4" Faceseal Male 1/4" NPT Female	□-50-712-□ □-70-712-4VM-□ □-70-712-4NF-□	1.53 2.00 1.85	38.9 50.8 47.0	1-1/4
714	Blank Plug 1/4" Faceseal Male 1/4" NPT Female	□-50-712-□ □-70-714-4VM-□ □-70-714-4NF-□	1.53 2.00 1.85	38.9 50.8 47.0	1-1/4
716	Blank Plug 1/4" Faceseal Male 1/4" NPT Female	□-50-712-□ □-70-716-4VM-□ □-70-716-4NF-□	1.53 2.00 1.85	38.9 50.8 47.0	1-1/4
718	Blank Plug 1/4" Faceseal Male 1/4" NPT Female	□-50-712-□ □-70-718-4VM-□ □-70-718-4NF-□	1.53 2.00 1.85	38.9 50.8 47.0	1-1/4
720	Blank Plug 1/4" Faceseal Male 1/4" NPT Female	□-50-720-□ □-70-720-4VM-□ □-70-720-4NF-□	1.53 2.00 1.85	38.9 50.8 47.0	1-1/4
722	Blank Plug 1/4" Faceseal Male 1/4" NPT Female	□-50-720-□ □-70-722-4VM-□ □-70-722-4NF-□	1.53 2.00 1.85	38.9 50.8 47.0	1-1/4
724	Blank Plug 1/4" Faceseal Male 1/4" NPT Female	□-50-720-□ □-70-724-4VM-□ □-70-724-4NF-□	1.53 2.00 1.85	38.9 50.8 47.0	1-1/4
726	Blank Plug 1/4" Faceseal Male 1/4" NPT Female	□-50-720-□ □-70-726-4VM-□ □-70-726-4NF-□	1.53 2.00 1.85	38.9 50.8 47.0	1-1/4
728	Blank Plug 1/4" Faceseal Male 1/4" NPT Female	□-50-720-□ □-70-728-4VM-□ □-70-728-4NF-□	1.53 2.00 1.85	38.9 50.8 47.0	1-1/4

CGA DISS SERIES

CYLINDER VALVE OUTLET CAPS (CHAIN, RING AND GASKET INCLUDED)

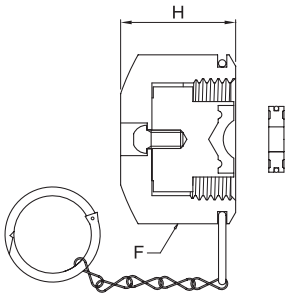

CGA DISS Number	Assembly Part Number	H Overall Length		F Hex Flat	Gasket Part Number (Nickel)	Gasket Part Number (PCTFE)	Gasket Part Number (Aluminum)
		in	mm				
632	□-90-630-□-□	.98	24.9	1-1/4	N-30-630	PC-30-630	AL-30-630
634	□-90-630-□-□	.98	24.9	1-1/4	N-30-630	PC-30-630	AL-30-630
636	□-90-630-□-□	.98	24.9	1-1/4	N-30-630	PC-30-630	AL-30-630
638	□-90-630-□-□	.98	24.9	1-1/4	N-30-630	PC-30-630	AL-30-630
640	□-90-630-□-□	.98	24.9	1-1/4	N-30-630	PC-30-630	AL-30-630
642	□-90-630-□-□	.98	24.9	1-1/4	N-30-630	PC-30-630	AL-30-630
712	□-90-710-□-□	.98	24.9	1-3/8	N-30-630	PC-30-630	AL-30-630
714	□-90-710-□-□	.98	24.9	1-3/8	N-30-630	PC-30-630	AL-30-630
716	□-90-710-□-□	.98	24.9	1-3/8	N-30-630	PC-30-630	AL-30-630
718	□-90-710-□-□	.98	24.9	1-3/8	N-30-630	PC-30-630	AL-30-630
720	□-90-710-□-□	.98	24.9	1-3/8	N-30-630	PC-30-630	AL-30-630
722	□-90-710-□-□	.98	24.9	1-3/8	N-30-630	PC-30-630	AL-30-630
724	□-90-710-□-□	.98	24.9	1-3/8	N-30-630	PC-30-630	AL-30-630
726	□-90-710-□-□	.98	24.9	1-3/8	N-30-630	PC-30-630	AL-30-630
728	□-90-710-□-□	.98	24.9	1-3/8	N-30-630	PC-30-630	AL-30-630

COMPLETE PIGTAIL CONNECTIONS (NIPPLE, NUT, GASKET AND BLANK PLUG INCLUDED)

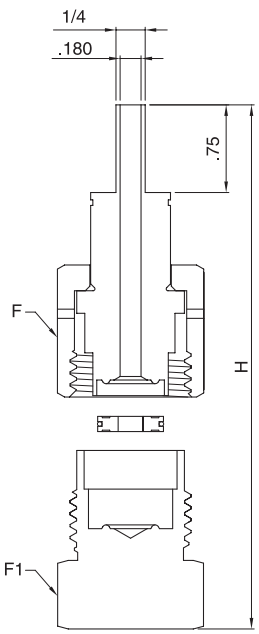

CGA DISS Number	Assembly Part Number	H Overall Length		F Hex Flat	F_1 Hex Flat	Gasket Part Number (Nickel)	Gasket Part Number (PCTFE)	Gasket Part Number (Aluminum)
		in	mm					
632	□-100-632-4TW-□-□	3.4	86.4	1-1/4	1-1/8	N-30-630	PC-30-630	AL-30-630
634	□-100-634-4TW-□-□	3.4	86.4	1-1/4	1-1/8	N-30-630	PC-30-630	AL-30-630
636	□-100-636-4TW-□-□	3.4	86.4	1-1/4	1-1/8	N-30-630	PC-30-630	AL-30-630
638	□-100-638-4TW-□-□	3.4	86.4	1-1/4	1-1/8	N-30-630	PC-30-630	AL-30-630
640	□-100-640-4TW-□-□	3.4	86.4	1-1/4	1-1/8	N-30-630	PC-30-630	AL-30-630
642	□-100-642-4TW-□-□	3.4	86.4	1-1/4	1-1/8	N-30-630	PC-30-630	AL-30-630
712	□-100-712-4TW-□-□	3.4	86.4	1-3/8	1-1/4	N-30-630	PC-30-630	AL-30-630
714	□-100-714-4TW-□-□	3.4	86.4	1-3/8	1-1/4	N-30-630	PC-30-630	AL-30-630
716	□-100-716-4TW-□-□	3.4	86.4	1-3/8	1-1/4	N-30-630	PC-30-630	AL-30-630
718	□-100-718-4TW-□-□	3.4	86.4	1-3/8	1-1/4	N-30-630	PC-30-630	AL-30-630
720	□-100-720-4TW-□-□	3.4	86.4	1-3/8	1-1/4	N-30-630	PC-30-630	AL-30-630
722	□-100-722-4TW-□-□	3.4	86.4	1-3/8	1-1/4	N-30-630	PC-30-630	AL-30-630
724	□-100-724-4TW-□-□	3.4	86.4	1-3/8	1-1/4	N-30-630	PC-30-630	AL-30-630
726	□-100-726-4TW-□-□	3.4	86.4	1-3/8	1-1/4	N-30-630	PC-30-630	AL-30-630
728	□-100-728-4TW-□-□	3.4	86.4	1-3/8	1-1/4	N-30-630	PC-30-630	AL-30-630

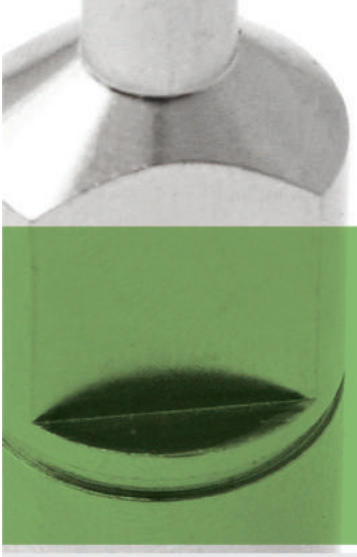

CGA & DIN/JIS Series

CGA SERIES

NIPPLES - 10 Series

NUTS - 20 Series

WASHERS - 30 Series

INLET CONNECTIONS - 40 Series

OUTLET BLANK PLUGS - 50 Series

OUTLET BLANK CAPS - 60 Series

OUTLET ADAPTERS - 70 Series

CYLINDER VALVE OUTLET PLUGS - 80 Series

CYLINDER VALVE OUTLET CAPS - 90 Series

COMPLETE PIGTAIL CONNECTIONS - 100 Series

DIN / JIS SERIES

COMPLETE PIGTAIL CONNECTIONS - 100 Series

CGA SERIES

INLET CONNECTIONS (NIPPLE, NUT AND WASHER INCLUDED)

AUTO TUBE WELD

Fig.1

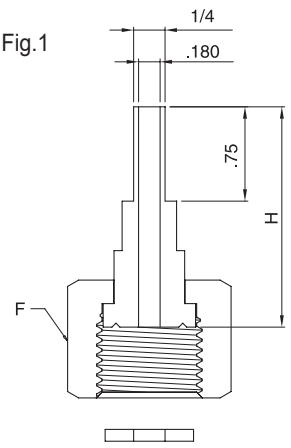

FACESEAL MALE

Fig.2

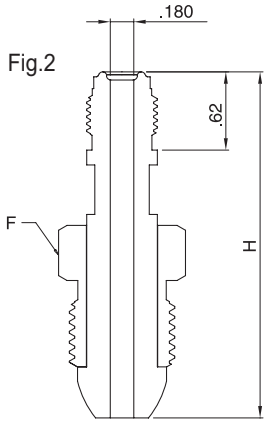

NPT MALE

Fig.3

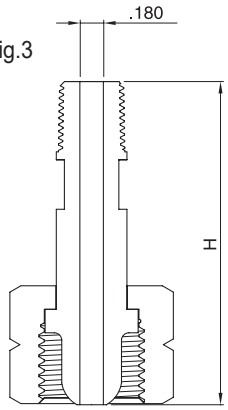

CGA DISS Number	Ref. DWG (Inlet Connection)	End Connection	Assembly Part Number	H Overall Length	Nipple Part Number	Nut Part Number	F Hex Flat	Washer Part Number (PCTFE)	Washer Part Number (PTFE)
170	Fig. 1	1/4" Auto Tube Weld 1/8" NPT Male	□-40-170-4TW-T-□ □-40-170-2NM-T-□	1-1/4 1-1/4	□-10-170-4TW-□ □-10-170-2NM-□	3S-20-170	3S-20-170	-	T-30-170
180	Fig. 1	1/4" Auto Tube Weld 1/8" NPT Male	□-40-180-4TW-T-□ □-40-180-2NM-T-□	1-1/4 1-3/4	□-10-180-4TW-□ □-10-180-2NM-□	3S-20-180	3S-20-180	-	T-30-180
290	Fig. 3	1/4" Auto Tube Weld 1/4" NPT Male	□-40-290-4TW-□ □-40-290-4NM-□	2-5/8 2-1/4	□-10-290-4TW-□ □-10-290-4NM-□	3S-20-290	3S-20-290	-	-
296	Fig. 2	1/4" Auto Tube Weld 1/4" Faceseal Male 1/4" NPT Male	□-40-296-4TW-□ □-40-296-4VM-□ □-40-296-4NM-□	2-5/8 2-3/4 3-1/2	□-10-296-4TW-□ □-10-296-4VM-□ □-10-296-4NM-□	3S-20-296	3S-20-296	-	-
320	Fig. 1	1/4" Auto Tube Weld 1/4" Faceseal Male 1/4" NPT Male	□-40-320-4TW-□-□ □-40-320-4VM-□-□ □-40-320-4NM-□-□	1-3/4 2-3/4 3-1/2	□-10-320-4TW-□ □-10-320-4VM-□ □-10-320-4NM-□	3S-20-320	3S-20-320	PC-30-320	T-30-320
326	Fig. 3	1/4" Auto Tube Weld 1/4" Faceseal Male 1/4" NPT Male	□-40-326-4TW-□ □-40-326-4VM-□ □-40-326-4NM-□	2-1/4 2-1/4 3	□-10-326-4TW-□ □-10-326-4VM-□ □-10-326-4NM-□	3S-20-326	3S-20-326	-	-
330	Fig. 1	1/4" Auto Tube Weld 1/4" Faceseal Male 1/4" NPT Male	□-40-330-4TW-□-□ □-40-330-4VM-□-□ □-40-330-4NM-□-□	1-3/4 1-3/4 2-1/2	□-10-330-4TW-□ □-10-330-4VM-□ □-10-330-4NM-□	3S-20-330	3S-20-330	PC-30-330	T-30-330
346	Fig. 3	1/4" Auto Tube Weld 1/4" Faceseal Male 1/4" NPT Male	□-40-346-4TW-□ □-40-346-4VM-□ □-40-346-4NM-□	2-5/16 2-1/4 3	□-10-346-4TW-□ □-10-346-4VM-□ □-10-346-4NM-□	3S-20-346	3S-20-346	-	-
350	Fig. 3	1/4" Auto Tube Weld 1/4" Faceseal Male 1/4" NPT Male	□-40-350-4TW-□ □-40-350-4VM-□ □-40-350-4NM-□	2-5/16 2-1/4 3	□-10-350-4TW-□ □-10-350-4VM-□ □-10-350-4NM-□	3S-20-350	3S-20-350	-	-

CGA SERIES

INLET CONNECTIONS (NIPPLE, NUT AND WASHER INCLUDED) CONTINUED FROM PREVIOUS PAGE

CGA DISS Number	Ref. DWG Inlet (Connection)	End Connection	Assembly Part Number	H Overall Length	Nipple Part Number	Nut Part Number	F Hex Flat	Washer Part Number (PCTFE)	Washer Part Number (PTFE)
510	Fig. 2	1/4" Auto Tube Weld 1/4" Faceseal Male 1/4" NPT Male	□-40-510-4TW-□ □-40-510-4VM-□ □-40-510-4NM-□	2-5/8 2-3/4 3-1/2	□-10-510-4TW-□ □-10-510-4VM-□ □-10-510-4NM-□	3S-20-510	1-1/8	-	-
540	Fig. 3	1/4" Auto Tube Weld 1/4" Faceseal Male 1/4" NPT Male	□-40-540-4TW-□ □-40-540-4VM-□ □-40-540-4NM-□	2-1/4 2-1/4 3	□-10-540-4TW-□ □-10-540-4VM-□ □-10-540-4NM-□	3S-20-540	1-1/8	-	-
580	Fig. 2	1/4" Auto Tube Weld 1/4" Faceseal Male 1/4" NPT Male	□-40-580-4TW-□ □-40-580-4VM-□ □-40-580-4NM-□	2-5/8 2-3/4 3-1/2	□-10-580-4TW-□ □-10-580-4VM-□ □-10-580-4NM-□	3S-20-580	1-1/8	-	-
590	Fig. 2	1/4" Auto Tube Weld 1/4" Faceseal Male 1/4" NPT Male	□-40-590-4TW-□ □-40-590-4VM-□ □-40-590-4NM-□	2-1/2 2-3/4 3-1/2	□-10-590-4TW-□ □-10-590-4VM-□ □-10-590-4NM-□	3S-20-590	1-1/8	-	-
660	Fig. 1	1/4" Auto Tube Weld 1/4" Faceseal Male 1/4" NPT Male	□-40-660-4TW-□-□ □-40-660-4VM-□-□ □-40-660-4NM-□-□	2-3/16 1-7/8 2-1/2	□-10-660-4TW-□ □-10-660-4VM-□ □-10-660-4NM-□	3S-20-660	1-1/4	PC-30-660	T-30-660
670	Fig. 1	1/4" Auto Tube Weld 1/4" Faceseal Male 1/4" NPT Male	□-40-670-4TW-□-□ □-40-670-4VM-□-□ □-40-670-4NM-□-□	2-3/16 1-7/8 2-1/2	□-10-670-4TW-□ □-10-670-4VM-□ □-10-670-4NM-□	3S-20-670	1-1/4	PC-30-670	T-30-670
678	Fig. 1	1/4" Auto Tube Weld 1/4" Faceseal Male 1/4" NPT Male	□-40-678-4TW-□-□ □-40-678-4VM-□-□ □-40-678-4NM-□-□	2-1/2 2 2-1/2	□-10-678-4TW-□ □-10-678-4VM-□ □-10-678-4NM-□	3S-20-678	1-1/4	PC-30-678	T-30-678
679	Fig. 1	1/4" Auto Tube Weld 1/4" Faceseal Male 1/4" NPT Male	□-40-679-4TW-□-□ □-40-679-4VM-□-□ □-40-679-4NM-□-□	2-1/2 2 3	□-10-679-4TW-□ □-10-679-4VM-□ □-10-679-4NM-□	3S-20-679	1-1/4	PC-30-679	T-30-679

CGA SERIES

OUTLET ADAPTERS AND BLANK PLUGS OR CAPS

BLANK PLUG

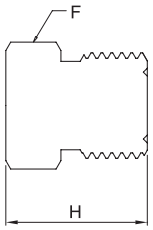

BLANK CAP

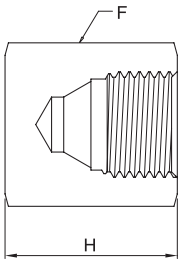

FACESEAL MALE

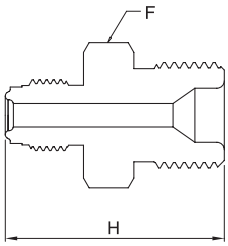

NPT FEMALE

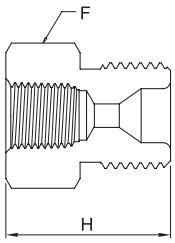

CGA DISS Number	End Connection	Part Number	H Overall Length		F Hex Flat
			in	mm	
296	Blank Cap 1/4" Faceseal Male 1/4" NPT Female	□-60-296-□ □-70-296-4VM-□ □-70-296-4NF-□	1.37 2.00 2.00	34.8 50.8 50.8	1-1/8
320	Blank Plug 1/4" Faceseal Male 1/4" NPT Female	□-50-320-□ □-70-320-4VM-□ □-70-320-4NF-□	1.12 1.74 1.12	28.4 44.2 28.4	1
326	Blank Plug 1/4" Faceseal Male 1/4" NPT Female	□-50-326-□ □-70-326-4VM-□ □-70-326-4NF-□	1.12 1.74 1.31	28.4 44.2 33.3	1
330	Blank Plug 1/4" Faceseal Male 1/4" NPT Female	□-50-330-□ □-70-330-4VM-□ □-70-330-4NF-□	1.12 1.74 1.31	28.4 44.2 33.3	1
346	Blank Plug 1/4" Faceseal Male 1/4" NPT Female	□-50-346-□ □-70-346-4VM-□ □-70-346-4NF-□	1.12 1.88 1.31	28.4 47.8 33.3	1
350	Blank Plug 1/4" Faceseal Male 1/4" NPT Female	□-50-350-□ □-70-350-4VM-□ □-70-350-4NF-□	1.12 1.88 1.31	28.4 47.8 33.3	1
510	Blank Cap 1/4" Faceseal Male 1/4" NPT Female	□-60-510-□ □-70-510-4VM-□ □-70-510-4NF-□	1.37 2.00 2.00	34.8 50.8 50.8	1-1/4
540	Blank Plug 1/4" Faceseal Male 1/4" NPT Female	□-50-540-□ □-70-540-4VM-□ □-70-540-4NF-□	1.12 1.87 1.25	28.4 47.5 31.8	1
580	Blank Cap 1/4" Faceseal Male 1/4" NPT Female	□-60-580-□ □-70-580-4VM-□ □-70-580-4NF-□	1.37 2.00 2.00	34.8 50.8 50.8	1-1/4
590	Blank Cap 1/4" Faceseal Male 1/4" NPT Female	□-60-590-□ □-70-590-4VM-□ □-70-590-4NF-□	1.37 2.00 2.00	34.8 50.8 50.8	1-1/4
660	Blank Plug 1/4" Faceseal Male 1/4" NPT Female	□-50-660-□ □-70-660-4VM-□ □-70-660-4NF-□	0.88 1.50 1.25	22.4 38.1 31.8	1-1/8
670	Blank Plug 1/4" Faceseal Male 1/4" NPT Female	□-50-670-□ □-70-670-4VM-□ □-70-670-4NF-□	0.88 1.50 1.25	22.4 38.1 31.8	1-1/8
678	Blank Plug 1/4" Faceseal Male 1/4" NPT Female	□-50-678-□ □-70-678-4VM-□ □-70-678-4NF-□	1.00 1.50 1.38	25.4 38.1 35.1	1-1/8
679	Blank Plug 1/4" Faceseal Male 1/4" NPT Female	□-50-679-□ □-70-679-4VM-□ □-70-679-4NF-□	0.88 1.75 1.25	22.4 44.5 31.8	1-1/8

CGA SERIES

CYLINDER VALVE OUTLET PLUGS OR CAPS (CHAIN, RING AND POLYETHYLENE DISC INCLUDED)

Fig. 1

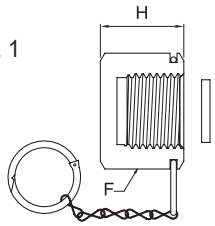

Cap

Fig. 2

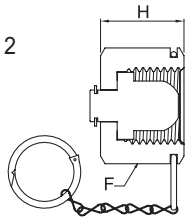

Cap

Fig. 3

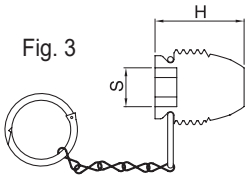

Plug

CGA Number	Ref. DWG	Assembly Part Number	H Overall Length		F Hex Flat	S Hex Flat	Washer Material
			in	mm			
320	Fig. 1	□-90-320-PD-□	.54	13.7	1	-	Polyethylene disc
326	Fig. 1	□-90-326-PD-□	.54	13.7	1	-	Polyethylene disc
330	Fig. 1	□-90-330-PD-□	.54	13.7	1	-	Polyethylene disc
346	Fig. 1	□-90-346-PD-□	.54	13.7	1	-	Polyethylene disc
350	Fig. 2	□-90-350-□	.82	20.8	1-1/8	-	-
510	Fig. 3	□-80-510-□	1	25.4	-	3/8	-
580	Fig. 3	□-80-580-□	1	25.4	-	3/8	-
590	Fig. 3	□-80-590-□	1	25.4	-	3/8	-
660	Fig. 1	□-90-660-PD-□	.54	13.7	1-1/4	-	Polyethylene disc
670	Fig. 1	□-90-670-PD-□	.54	13.7	1-1/4	-	Polyethylene disc
678	Fig. 1	□-90-678-PD-□	.54	13.7	1-1/4	-	Polyethylene disc
679	Fig. 1	□-90-679-PD-□	.54	13.7	1-1/4	-	Polyethylene disc

COMPLETE PIGTAIL CONNECTIONS (NIPPLE, NUT , WASHER AND BLANK PLUG OR CAP INCLUDED)

Fig. 1

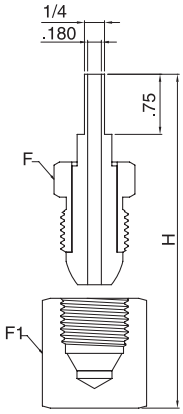

Fig. 2

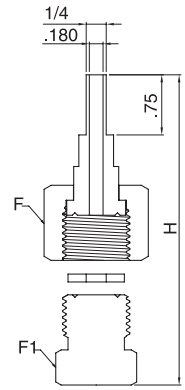

CGA Number	Ref. DWG	Assembly Part Number	H Overall Length		F Hex Flat	F_1 Hex Flat	Washer Part Number (PCTFE)	Washer Part Number (PTFE)	Seal Enhancers Part Number (Nickel)
			in	mm					
296	Fig. 1	□-100-296-4TW-□	3.03	77	7/8	1-1/8	-	-	-
320	Fig. 2	□-100-320-4TW-□-□	2.96	75.2	1-1/8	1	PC-30-320	T-30-320	-
326	Fig. 1	□-100-326-4TW-□	3.01	76.5	1-1/8	1	-	-	-
330	Fig. 2	□-100-330-4TW-□-□	2.96	75.2	1-1/8	1	PC-30-330	T-30-330	-
346	Fig. 1	□-100-346-4TW-□	2.97	75.4	1-1/8	1	-	-	-
350	Fig. 1	□-100-350-4TW-□	2.96	75.2	1-1/8	1	-	-	-
510	Fig. 1	□-100-510-4TW-□	3.03	77	1-1/8	1-1/4	-	-	-
540	Fig. 1	□-100-540-4TW-□	2.96	75.2	1-1/8	1	-	-	-
580	Fig. 1	□-100-580-4TW-□	3.03	77	1-1/8	1-1/4	-	-	-
590	Fig. 1	□-100-590-4TW-□	3.03	77	1-1/8	1-1/4	-	-	-
660	Fig. 2	□-100-660-4TW-□-□	2.96	75.2	1-1/4	1-1/8	PC-30-660	T-30-660	-
670	Fig. 2	□-100-670-4TW-□-□	2.96	75.2	1-1/4	1-1/8	PC-30-670	T-30-670	-
678	Fig. 2	□-100-678-4TW-□-□	3.08	78.2	1-1/4	1-1/8	PC-30-678	T-30-678	-
679	Fig. 2	□-100-679-4TW-□-□	2.96	75.2	1-1/4	1-1/8	PC-30-679	T-30-679	-

DIN SERIES

COMPLETE PIGTAIL CONNECTIONS (NIPPLE, NUT , WASHER AND BLANK PLUG INCLUDED)

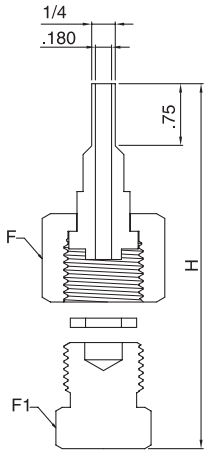

CGA Number	Assembly Part Number	H Overall Length		F Hex Flat	F_1 Hex Flat	Washer Part Number (PTFE)
		in	mm			
1	□-100-DIN1-4TW-T-□	2.96	75.2	1-1/4	1-1/4	T-30-DIN1
5	□-100-DIN5-4TW-T-□	3.09	78.5	1-1/4	1-1/4	T-30-DIN5
6	□-100-DIN6-4TW-T-□	2.96	75.2	1-1/4	1-1/4	T-30-DIN6
8	□-100-DIN8-4TW-T-□	3.09	78.5	1-1/4	1-1/4	T-30-DIN8
11	□-100-DIN11-4TW-T-□	2.88	73.2	7/8	11/16	T-30-DIN11
14	□-100-DIN14-4TW-T-□	2.88	73.2	1-1/16	7/8	T-30-DIN14

JIS SERIES

COMPLETE PIGTAIL CONNECTIONS (NIPPLE, NUT , WASHER AND BLANK PLUG INCLUDED)

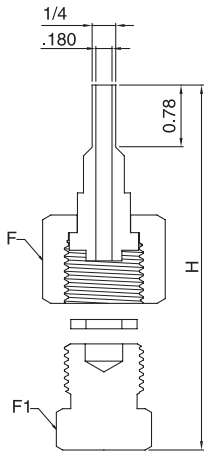

JIS Number	Assembly Part Number	H Overall Length		F Hex Flat	F_1 Hex Flat	Washer Part Number (PCTFE)
		in	mm			
22R	□-100-JIS22R-4TW-PC-□	3.25	82.6	1-1/4	1-1/4	PC-30-JIS22
22L	□-100-JIS22L-4TW-PC-□	3.25	82.6	1-1/4	1-1/4	PC-30-JIS22
26R	□-100-JIS26R-4TW-PC-□	3.14	79.8	1-1/4	1-1/4	PC-30-JIS26
26L	□-100-JIS26L-4TW-PC-□	3.14	79.8	1-1/4	1-1/4	PC-30-JIS26

GAS CONNECTION ASSIGNMENT TABLE

GAS	CGA DISS	CGA	DIN	JIS
Ammonia	720	705	DIN 6	22-R
Argon	718	580	DIN 6	22-R or 23-R
Arsenic Pentafluoride	642	-	-	-
Arsine	632	350	-	22-L
Boron Trichloride	634	660	DIN 8	-
Boron Trifluoride	642	330	DIN 8	22-L
Carbon Dioxide	716	320	DIN 6	-
Carbon Monoxide	724	350	DIN 5	22-L
Chlorine	728	-	DIN 8	26-R
Diborane	632	350	-	22-L
Dichlorosilane	636	678	DIN 5	-
Diethlyzinc	726	510	-	-
Diethyltelluride	726	-	-	-
Dimethylzinc	726	-	-	-
Disilane	632	-	-	-
Germane	632	350 or 660	-	-
Halocarbon 11	716	660	-	-
Halocarbon 12	716	660	DIN 6	-
Halocarbon 13	716	660	DIN 6	-
Halocarbon 14	716	320 or 580	DIN 6	-
Halocarbon 23	716	660	DIN 6	-
Halocarbon 115	716	660	DIN 6	-
Halocarbon 116	716	660	-	-
Helium	718	580	DIN 6	22-R or 23-R
Hydrogen	724	350	DIN 1	22-L
Hydrogen Bromide	634	330	DIN 8	26-R
Hydrogen Chloride	634	330	DIN 8	26-R
Hydrogen Fluoride	638	660 or 670	-	26-R
Hydrogen Sulfide	722	330	DIN 5	-
Krypton	718	580	DIN 6	22-R or 23-R
Neon	718	580	DIN 6	22-R or 23-R
Nitrogen	718	580	DIN 10	22-R or 23-R
Nitrogen Trifuoride	640	330 or 670	DIN 8	-
Nitrous Oxide	712	326	DIN 8	-
Oxygen	714	540	DIN 9	22-R or 23-R
Perfluoropropane	716	660	-	-
Phosphine	632	350 or 660	DIN 1	-
Phosphorus Pentafluoride	642	330 or 660	-	-
Silane	632	350	-	-
Silicon Tetrachloride	636	-	-	-
Silicon Tetrafluoride	642	330	-	22-L
Sulphur Hexafluoride	716	590	DIN 6	26-R
Trichlorosilane	636	-	-	-
Triethlaluminum	726	510	-	-
Tungsten Hexafluoride	638	670	DIN 8	-
Xenon	718	580	DIN 6	22-R

*** Gas Connection Assignment Table Sources**

- Compressed Gas Association Publication V-1 (2005 Edition)
- Deutsher Institute fur Normung 477 Part 1 (May 1990 Edition)
- Japanese Industrial Standard B8244 (Translated) (1989 Edition)
- Japanese Industrial Standard B8246 (Translated) (1989 Edition)
- International Organization for Standardization ISO/DIS 407 (1983 Edition)
- Deutsher Institute fur Normung 477 Part 8 (1990 Edition)

ULTRA HIGH PURITY PRODUCTS

GAS VALVES

Valves

Clean Ball Valves

SP Series

SF Series

TK-FUJIKIN Valves

Semiconductor / Ultra High Purity Products

TK-FUJIKIN CORPORATION

Fujikin Carp Group

INDEX

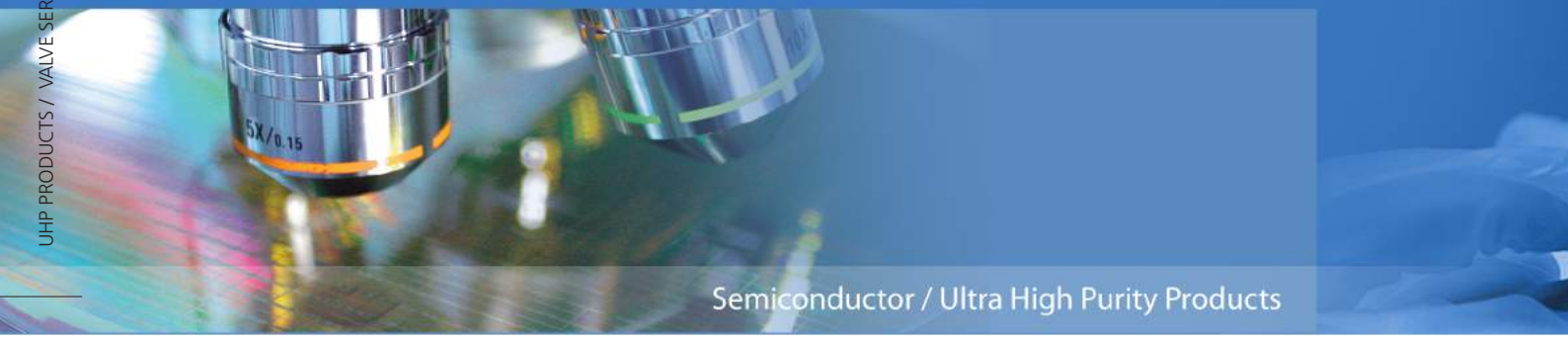

LOW PRESSURE DIAPHRAGM VALVE

HIGH FLOW DIAPHRAGM VALVE

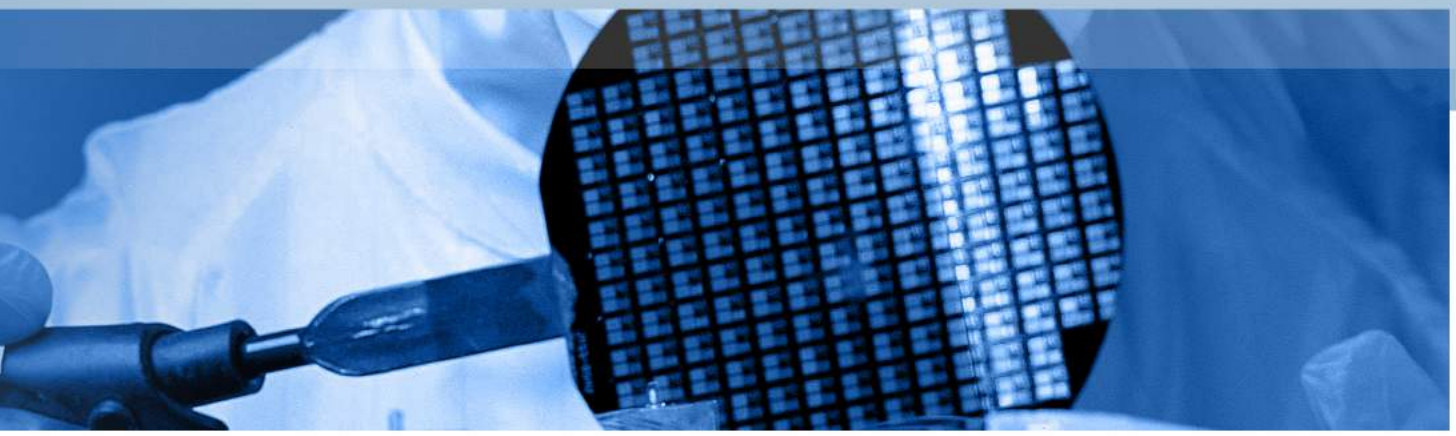

HIGH PRESSURE DIAPHRAGM VALVE

LOW PRESSURE BELLOWS VALVE

CHECK VALVE

OTHERS VALVE

PRODUCTION FLOW

CAREFULLY SELECTED MATERIALS

Selecting and standardizing a highly clean material reduced non-metalic inclusions and outgases. Further, production of VAR material that is highly resistant to corrosion and Hastelloy® C-22™ material are even made possible.

HIGH PRECISION MACHINING PROCESS

Using fully automatic, high precision, high-speed CNC Machining center and lathe, a precision machining process is established. With high precision locating, automatic dimensional calculation and automatic compensation, an unattended, labor-reduced production process is made possible.

ULTRA-HIGH CLEANING PROCESS

Using TKF unique technology for super cleanness, passivation treatment by means of special electropolishing, etc. is applied to the smooth machined surface before polishing process. This enables to form a highly corrosion-resistant and super clean surface structure.

CLEAN WELDING

Clean welding method is made available by using a high speed, full-automatic orbital welding machine. Using a sealed inner and outer manostat gauge in the clean room, inner pressure is controlled with hyper pure inert-gas so that the totally clean welding technology can fully contribute to realization of the flat bead condition, etc..

ULTRA PRECISION CLEANING

An automatic processing line including ultra pure hot water with resistivity of more than 17MΩcm has been established in the clean room. The best possible cleaning condition is achieved here prior to the assembly.

ASSEMBLY IN THE CLEAN ROOM

Production staffs fully acquainted with the special assembling method are dedicated to the assembly process in the certified clean room.

CLEAN PACKING

Packing is carried out at the certified clean room with inner vacuum seal method.
In this way, mixing-in of foreign particles at the time of packing is extensively reduced to its minimum.

SELECTION GUIDE

No.	GAS NAME		TK-FUJIKIN VALVE					
			BODY		SEAT			GASKET
			SUS	HAS	PCTFE	PFA	PTFE	NIKEL
1	ARGON	Ar	○	○	○	○	○	○
2	ARSINE	AsH_3	○	×	○	○	○	×
3	DIBORANE	B_2H_6	○	○	○	○	○	–
4	BORONTRICHLORIDE	BCl_3	○	○	○	–	○	○
5	HALOCARBON-116 HEXAFLUOROETHANE	C_2F_6	○	○	○	○	○	○
6	Ethene, Ethylene	C_2H_4	○	○	○	–	○	–
7	PERFLUOROPROPANE	C_3F_8	○	○	○	–	○	–
8	Sifren® 46 Hexafluorobutadiene	C_4F_6	–	○	–	–	○	–
9	Octafluorocyclobutane	C_4F_8	○	○	–	–	○	–
10	Octafluorocyclopentene	C_5F_8	–	○	–	–	○	–
11	Tetrafluoromethane	CF_4	○	○	–	○	○	–
12	Difluoromethane	CH_2F_2	–	○	–	○	○	–
13	Methyl Fluoride	CH_3F	○	○	–	–	○	–
14	Methane	CH_4	○	○	○	○	○	–
15	Trifluoromethane	CHF_3	○	○	–	○	○	–
16	Chlorine	Cl_2	○	○	○	○	○	×
17	Chlorotrifluoromethane	ClF_3	–	○	–	–	○	–
18	Trifluoromethane	CO	○	○	–	○	○	–
19	Carbon Dioxide	CO_2	○	○	○	○	○	×
20	Deuterium	D_2	○	○	○	–	○	–
21	≤20% Fluorine	≤20%F_2	–	○	–	–	○	–
22	Germane	GeH_4	○	○	–	–	○	–
23	Hydrogen Bromide	HBr	○	○	–	–	○	–
24	Hydrogen Chloride	HCl	×	○	○	○	○	○
25	Helium	He	○	○	○	○	○	○
26	AMMONIA	NH_3	○	○	○	○	○	–
27	Nitrogen	N_2	○	○	○	○	○	○
28	Nitrous Oxide	N_2O	○	○	○	○	○	○
29	Nitrogen Trifluoride	NF_3	○	○	–	○	○	–
30	Nitrogen Monoxide	NO	○	○	–	–	○	–
31	Oxygen	O_2	○	○	○	○	○	○
32	Phosphene	PH_3	○	○	○	–	○	×
33	Sulfur Hexafluoride	SF_6	○	○	○	–	○	–
34	Disilane	Si_2H_6	○	○	–	–	○	–
35	Silicon Tetrafluoride	SiF_4	×	○	○	–	○	–
36	Dichlorosilane	SiH_2Cl_2	×	○	○	○	○	–
37	Silane	SiH_4	○	○	○	○	○	○
38	Trichlorosilane	$SiHCl_3$	○	○	○	○	○	–
39	Sulfur Dioxide	SO_2	○	○	○	○	○	×
40	Tungsten Hexafluoride	WF_6	×	○	–	○	○	–
41	Xenon	Xe	○	○	○	○	○	○

○	사용가능	×	사용불가	–	사용검토

LOW PRESSURE MANUAL DIAPHRAGM VALVE

STD TYPE

FEATURES

- Reduced inner capacity
- Electropolished, D.I. water cleaned, assembled, tested and packaged in a certified clean room
- Minimal contributions of Moisture, Oxygen and Hydrocarbon
- Permanently heat code laser marked; material traceable to original mill certificate of test
- Hastelloy® C-22™ and custom configurations available upon request

MAJOR SPECIFICATIONS

Size	1/4″	3/8″, 1/2″	3/4″
Cv Value	0.3	0.7	0.7
Orifice Size	4.5mm	7mm	7mm
Max. Working Pressure (G.)	1MPa		
Max. Working Temp.	PCTFE : -10°C ~ 80°C / PI, PFA : -10°C ~ 150°C		
Internal Leakage Allowance (He)	$1x10^{-10}$ Pa · m^3/s		
Test Pressure ≤ 1×10^{-2} Torr			
Holding Time ≥ 30 sec.			
External Leakage Allowance (He)	$1x10^{-10}$ Pa · m^3/s		
Test Pressure ≤ 1×10^{-2} Torr			
Holding Time ≥ 1 min.			
Particle Inspection (EP only)	No count		
Pressure : 60~80psi N_2 Gas			
Sample Volume : 1CFM			
0.1μm and Larger			

PRODUCT GRADE

GRADE	AP	BA	EP
Inner Surface Roughness	Ry ≤ 25μm Cut off Length : 2.5mm Measuring Length : 12.5mm	Ry ≤ 3.0μm 10 μinch Ra(Avg.) Cut off Length : 0.8mm Measuring Length : 4mm	Ry ≤ 0.7μm 5 μinch Ra(Avg.) Cut off Length : 0.25mm Measuring Length : 1.25mm
Polishing	Machining Finish	Machining Finish	Electro Polishing Finish

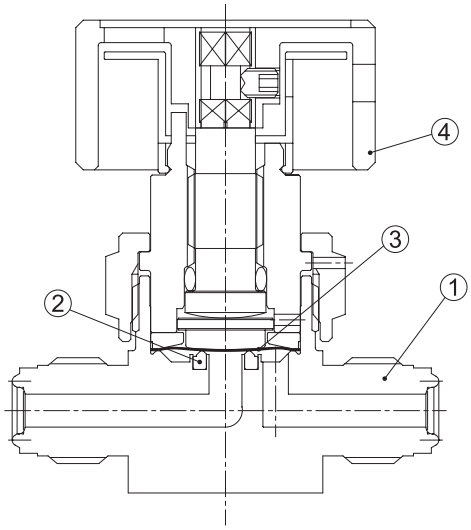

MATERIAL

NO.	NAME	MATERIAL
1	Body	316L Stainless Steel 316L Stainless Steel VAR 304 Stainless Steel
2	Seat	PCTFE / PI / PFA
3	Diaphragm	Ni-Co Alloy
4	Handle	Aluminum

ORDERING INFORMATION

S	4	DVN	–	VM	–	X1	–	P
Material	Size	Product		Connection		Option		Grade

MATERIAL		SIZE		CONNECTION		OPTION		GRADE	
S	316L Stainless Steel	4	1/4″	VM	MFS Male	×47	Constant Bleed ø0.3	AP	AP Grade
D	316L Stainless Steel VAR	6	3/8″	VF	MFS Female	×59	Constant Bleed ø0.6	BLANK	BA Grade
4S	304 Stainless Steel	8	1/2″	SW	Lok			P	EP Grade
		12	3/4″	TW	Butt Weld				

MODEL	CONNECTION	SIZE	A	B	C	D	F	G	H
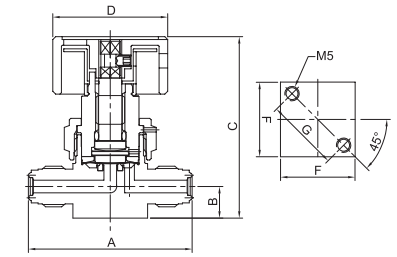	MFS Male	1/4″	57	11	64.3	40	26	25.4	
		3/8″	76.2	16	76.8	40	37	28	
		1/2″	76.2	16	76.8	40	37	28	
		3/4″	122	22	82.8	40	37	28	
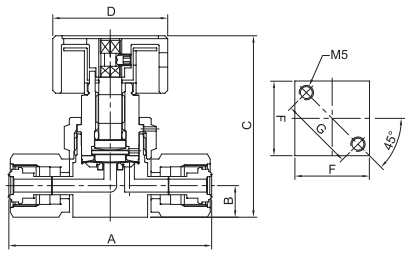	MFS Female	1/4″	70.6	11	64.3	40	26	25.4	
		3/8″	83	16	76.8	40	37	28	
		1/2″	83	16	76.8	40	37	28	
		3/4″	122	22	82.8	40	37	28	
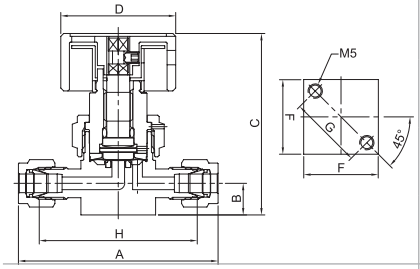	Lok	1/4″	69.5	11	64.3	40	26	25.4	55
		3/8″	82.5	16	76.8	40	37	28	68
		1/2″	91	16	76.8	40	37	28	70
		3/4″	106	22	82.8	40	37	28	84
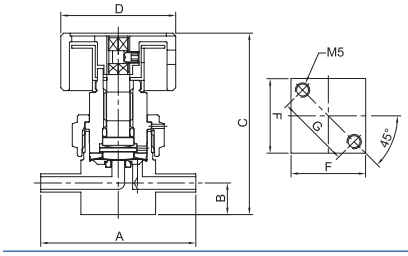	Butt Weld	1/4″	54	11	64.3	40	26	25.4	
		3/8″	69	16	76.8	40	37	28	
		1/2″	69	16	76.8	40	37	28	
		3/4″	150	22	82.8	40	37	28	

MANUAL DIAPHRAGM VALVE

LOCKING TYPE

FEATURES

- Quick, quarter-turn actuation
- Lockable in the CLOSED position for safety
- Low internal volume
- Minimal particle generation
- Minimal contributions of Moisture, Oxygen and Hydrocarbon
- Permanently heat code laser marked; material traceable to original mill certificate of test.
- Hastelloy® C-22TM and custom configurations available upon request

MAJOR SPECIFICATIONS

Size	1/4"	1/2"
Cv Value	0.3	0.5
Orifice Size	4.5mm	7.0mm
Max. Working Pressure (G.)	1MPa	
Max. Working Temp.	-10°C ~ 80°C	
Internal Leakage Allowance (He)	$1x10^{-10}$ Pa · m^3/s	
Test Pressure ≤ 1×10^{-2} Torr		
Holding Time ≥ 30 sec.		
External Leakage Allowance (He)	$1x10^{-10}$ Pa · m^3/s	
Test Pressure ≤ 1×10^{-2} Torr		
Holding Time ≥ 1 min.		
Particle Inspection (EP only)	No count	
Pressure : 60~80psi N_2 Gas		
Sample Volume : 1CFM		
0.1μm and Larger		

PRODUCT GRADE

GRADE	AP	BA	EP
Inner Surface Roughness	Ry ≤ 25μm Cut off Length : 2.5mm Measuring Length : 12.5mm	Ry ≤ 3.0μm 10 μinch Ra(Avg.) Cut off Length : 0.8mm Measuring Length : 4mm	Ry ≤ 0.7μm 5 μinch Ra(Avg.) Cut off Length : 0.25mm Measuring Length : 1.25mm
Polishing	Machining Finish	Machining Finish	Electro Polishing Finish

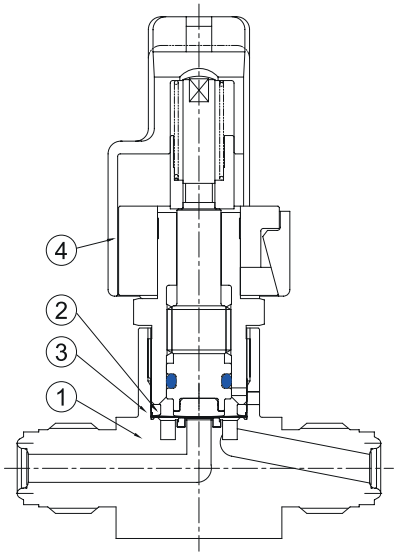

MATERIAL

NO.	NAME	MATERIAL
1	Body	316L Stainless Steel 316L Stainless Steel VAR 304 Stainless Steel
2	Seat	PCTFE
3	Diaphragm	Ni-Co Alloy
4	Handle	NYLON6

ORDERING INFORMATION

S	4	DVNL	—	VM	—	X1	—	P
Body Material	Size	Product		Connection Type		Option		Grade

MATERIAL		SIZE		CONNECTION		GRADE	
S	316L Stainless Steel	4	1/4"	VM	MFS Male	AP	AP Grade
D	316L Stainless Steel VAR	6	3/8"	VF	MFS Female	BLANK	BA Grade
4S	304 Stainless Steel	8	1/2"	SW	Lok	P	EP Grade
				TW	Butt Weld		

MODEL	CONNECTION	SIZE	A	B	C	D	E	F	G
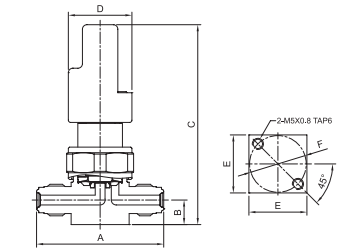	MFS Male	1/4"	57	11	89.6	28.5	26	25.4	-
		3/8"	76.2	16	102.3	28.5	37	28	-
		1/2"	76.2	16	102.3	28.5	37	28	-
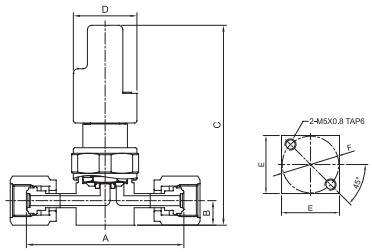	MFS Female	1/4"	70.6	11	89.6	28.5	26	25.4	-
		3/8"	83	16	102.3	28.5	37	28	-
		1/2"	83	16	102.3	28.5	37	28	-
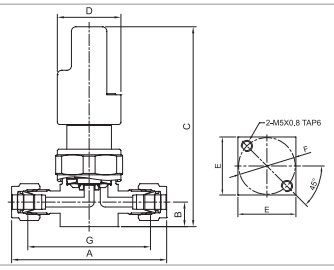	Lok	1/4"	69.5	11	89.6	28.5	26	25.4	55
		3/8"	82.5	16	102.3	28.5	37	28	68
		1/2"	91	16	102.3	28.5	37	28	70
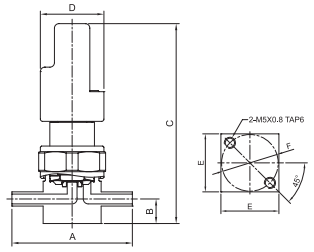	Butt Weld	1/4"	54	11	89.6	28.5	26	25.4	-
		3/8"	69	16	102.3	28.5	37	28	-
		1/2"	69	16	102.3	28.5	37	28	-

MANUAL DIAPHRAGM VALVE

IGS LOCKING TYPE

FEATURES

- Quick, quarter-turn actuation
- Lockable in the CLOSED position for safety
- Highly resistant to corrosion using nickel-cobalt alloy diaphragm
- Minimal particle generation
- Minimal contributions of Moisture, Oxygen and Hydrocarbon
- Footprint and compact (footprint), to reduce the space required
- Assembly and lightweight for easy component

MAJOR SPECIFICATIONS

Size	1.125″	1.5″
Cv Value	0.3	0.3
Max. Working Pressure (G.)	1MPa	
Max. Working Temp.	-10°C ~ 80°C	
Internal Leakage Allowance (He)	$1x10^{-10}$ Pa · m^3/s	
Test Pressure ≤ 1×10^{-2} Torr		
Holding Time ≥ 30 sec.		
External Leakage Allowance (He)	$1x10^{-10}$ Pa · m^3/s	
Test Pressure ≤ 1×10^{-2} Torr		
Holding Time ≥ 1 min.		
Particle Inspection (EP only)	No count	
Pressure : 60~80psi N_2 Gas		
Sample Volume : 1CFM		
0.1μm and Larger		

PRODUCT GRADE

GRADE	EP
Inner Surface Roughness	Ry ≤ 0.7μm 5 μinch Ra(Avg.) Cut off Length : 0.25mm Measuring Length : 1.25mm
Polishing	Electro Polishing Finish

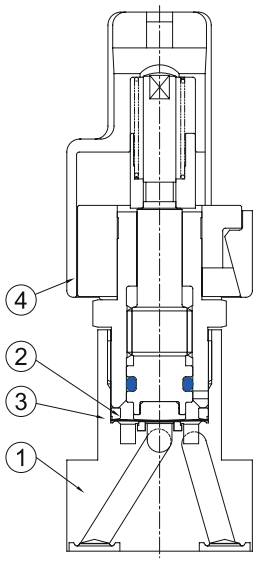

MATERIAL

NO.	NAME	MATERIAL
1	Body	316L Stainless Steel VAR
2	Seat	PCTFE
3	Diaphragm	Ni-Co Alloy
4	Handle	NYLON6

ORDERING INFORMATION

S	11	DVNL1	–	2W	–	X1	–	P
Body Material	Size	Product		Connection Type		Option		Grade

MATERIAL		SIZE		CONNECTION		GRADE	
S	316L Stainless Steel	11	1.125"	2W	2 Port W-Seal	BLANK	BA Grade
D	316L Stainless Steel VAR	15	1/5"	2C	2 Port C-Seal	P	EP Grade

MODEL	CONNECTION	SIZE	A	B	C	D	E	F	G
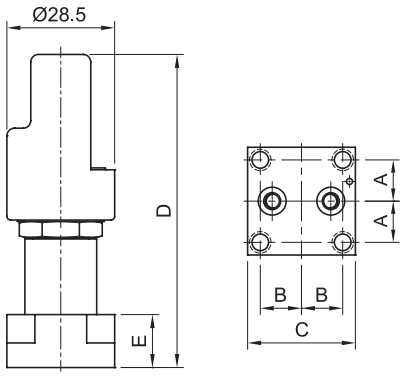	W-Seal	1.125"	10.9	10	28.5	82.8	14	-	-
		1.5"	15.1	13	39	85.8	17	-	-
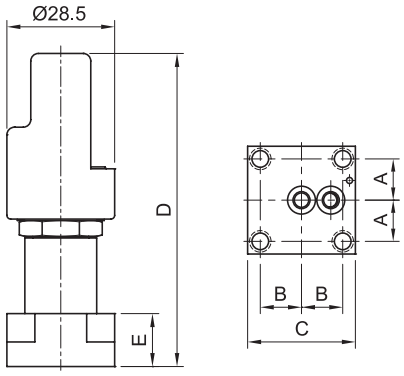	C-Seal	1.125"	10.9	10.9	28.5	82.8	14	-	-
			15.1	15.1	39	85.8	17	-	-

LOW PRESSURE MANUAL DIAPHRAGM VALVE

FORGED BODY TYPE

FEATURES

- Forged body using round bar stock
- Low internal volume
- Minimal particle generation
- Minimal contributions of Moisture, Oxygen and Hydrocarbon
- Permanently heat code laser marked; material traceable to original mill certificate of test
- Hastelloy® C-22™ and custom configurations available upon request

MAJOR SPECIFICATIONS

Size	1/4″	3/8″, 1/2″	3/4″
Cv Value	0.3	0.7	0.7
Orifice Size	4.5mm	6.5mm	6.5mm
Max. Working Pressure (G.)	1MPa		
Max. Working Temp.	PCTFE : -10°C ~ 80°C / PI, PFA : -10°C ~ 150°C		
Internal Leakage Allowance (He)	$1x10^{-10}$ Pa · m^3/s		
Test Pressure ≤ 1×10^{-2} Torr			
Holding Time ≥ 30 sec.			
External Leakage Allowance (He)	$1x10^{-10}$ Pa · m^3/s		
Test Pressure ≤ 1×10^{-2} Torr			
Holding Time ≥ 1 min.			
Particle Inspection (EP only)	No count		
Pressure : 60~80psi N_2 Gas			
Sample Volume : 1CFM			
0.1μm and Larger			

PRODUCT GRADE

GRADE	AP	BA	EP
Inner Surface Roughness	Ry ≤ 25μm Cut off Length : 2.5mm Measuring Length : 12.5mm	Ry ≤ 3.0μm 10 μinch Ra(Avg.) Cut off Length : 0.8mm Measuring Length : 4mm	Ry ≤ 0.7μm 5 μinch Ra(Avg.) Cut off Length : 0.25mm Measuring Length : 1.25mm
Polishing	Machining Finish	Machining Finish	Electro Polishing Finish

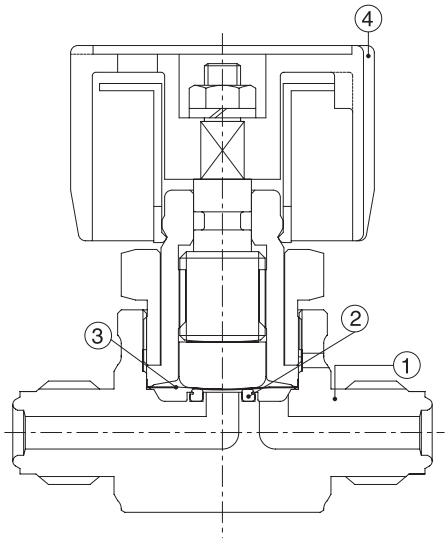

MATERIAL

NO.	NAME	MATERIAL
1	Body	316L Stainless Steel 316L Stainless Steel VAR 304 Stainless Steel
2	Seat	PCTFE / PI / PFA
3	Diaphragm	Ni-Co Alloy
4	Handle	ABS

ORDERING INFORMATION

S	4	DV2	–	VM	–	X1	–	P
Material	Size	Product		Connection		Option		Grade

MATERIAL		SIZE		CONNECTION		GRADE	
S	316L Stainless Steel	4	1/4″	VM	MFS Male	AP	AP Grade
D	316L Stainless Steel VAR	6	3/8″	VF	MFS Female	BLANK	BA Grade
4S	304 Stainless Steel	8	1/2″	SW	Lok	P	EP Grade
		12	3/4″	TW	Butt Weld		

MODEL	CONNECTION	SIZE	A	B	C	D	E	G	H
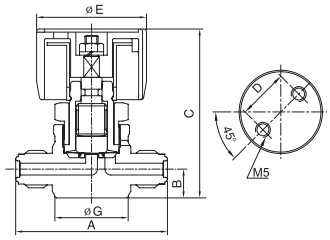	MFS Male	1/4″	58	11	66	17	45	28	
		3/8″	76	16	77	28	45	38	
		1/2″	76	16	77	28	45	38	
		3/4″	122	22	85	28	45	38	
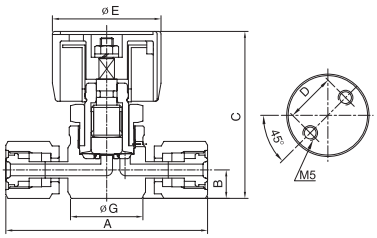	MFS Female	1/4″	78	11	66	17	45	28	
		3/8″	104.6	16	77	28	45	38	
		1/2″	104.6	16	77	28	45	38	
		3/4″	122	22	85	28	45	38	
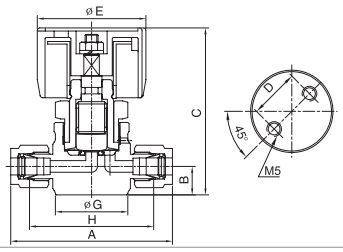	Lok	1/4″	69.3	11	66	17	45	28	55
		3/8″	82.5	16	77	28	45	38	68
		1/2″	90.2	16	77	28	45	38	70
		3/4″	106	22	85	28	45	38	84
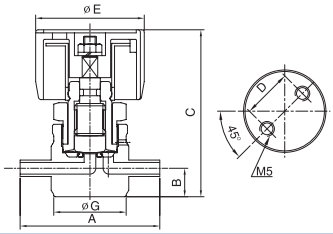	Butt Weld	1/4″	135	11	66	17	45	28	
		3/8″	147	16	77	28	45	38	
		1/2″	147	16	77	28	45	38	
		3/4″	150	22	85	28	45	38	

LOW PRESSURE PNEUMATIC DIAPHRAGM VALVE

STD TYPE

FEATURES

- Reduced inner capacity
- Electropolished, D.I. water cleaned, assembled, tested and packaged in a certified clean room
- Minimal contributions of Moisture, Oxygen and Hydrocarbon
- Permanently heat code laser marked; material traceable to original mill certificate of test
- Hastelloy® C-22™ and custom configurations available upon request

MAJOR SPECIFICATIONS

Size	1/4"	3/8", 1/2"	3/4"
Cv Value	0.3	0.7	0.7
Orifice Size	4.5mm	7mm	7mm
Max. Working Pressure (G.)	1MPa		
Operating Pressure (G.)	0.4 ~ 0.6MPa		
Max. Working Temp.	PCTFE : -10°C ~ 80°C / PI, PFA : -10°C ~ 150°C		
Internal Leakage Allowance (He)	$1x10^{-10}$ Pa · m^3/s		
Test Pressure ≤ 1×10^{-2} Torr			
Holding Time ≥ 15 sec.			
External Leakage Allowance (He)	$1x10^{-10}$ Pa · m^3/s		
Test Pressure ≤ 1×10^{-2} Torr			
Holding Time ≥ 1 min.			
Particle Inspection (EP only)	No count		
Pressure : 60~80psi N_2 Gas			
Sample Volume : 1CFM			
0.1μm and Larger			

PRODUCT GRADE

GRADE	AP	BA	EP
Inner Surface Roughness	Ry ≤ 25μm Cut off Length : 2.5mm Measuring Length : 12.5mm	Ry ≤ 3.0μm 10 μinch Ra(Avg.) Cut off Length : 0.8mm Measuring Length : 4mm	Ry ≤ 0.7μm 5 μinch Ra(Avg.) Cut off Length : 0.25mm Measuring Length : 1.25mm
Polishing	Machining Finish	Machining Finish	Electro Polishing Finish

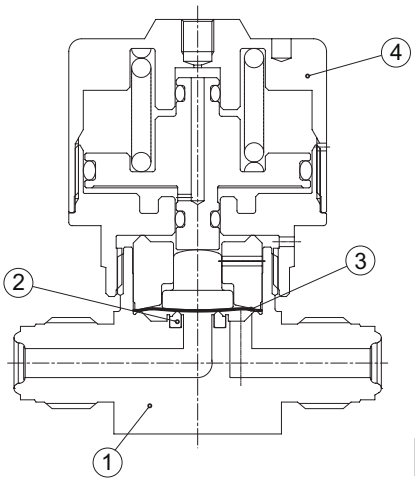

MATERIAL

NO.	NAME	MATERIAL
1	Body	316L Stainless Steel 316L Stainless Steel VAR 304 Stainless Steel
2	Seat	PCTFE / PI / PFA
3	Diaphragm	Ni-Co Alloy
4	Actuator	Aluminum

ORDERING INFORMATION

S	4	PDVN	–	VM	–	C	–	X1	–	P
Material	Size	Product		Connection		Operation Method		Option		Grade

MATERIAL		SIZE		CONNECTION		OPERATION METHOD		OPTION		GRADE	
S	316L Stainless Steel	4	1/4″	VM	MFS Male	C	Normally Close	×47	Constant Bleed ø0.3	AP	AP Grade
D	316L Stainless Steel VAR	6	3/8″	VF	MFS Female	O	Normally Open	×59	Constant Bleed ø0.6	BLANK	BA Grade
4S	304 Stainless Steel	8	1/2″	SW	Lok					P	EP Grade
		12	3/4″	TW	Butt Weld						

MODEL	CONNECTION	SIZE	A	B	C	D	E	F	G
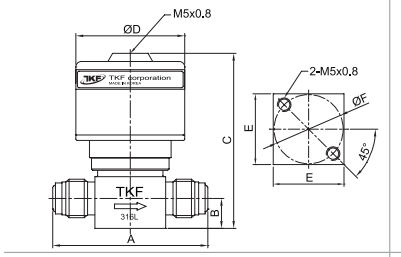	MFS Male	1/4″	57	11	64.3	40	26	25.4	
		3/8″	76.2	16	83.8	55	37	28	
		1/2″	76.2	16	83.8	55	37	28	
		3/4″	122	22	89.8	55	37	28	
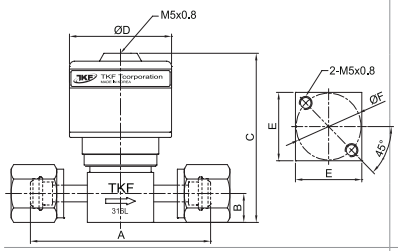	MFS Female	1/4″	70.6	11	64.3	40	26	25.4	
		3/8″	83	16	83.8	55	37	28	
		1/2″	83	16	83.8	55	37	28	
		3/4″	122	22	89.8	55	37	28	
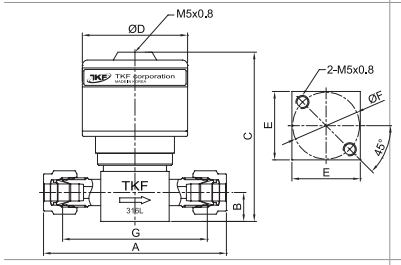	Lok	1/4″	69.5	11	64.3	40	26	25.4	55
		3/8″	82.5	16	83.8	55	37	28	68
		1/2″	91	16	83.8	55	37	28	70
		3/4″	106	22	89.8	55	37	28	84
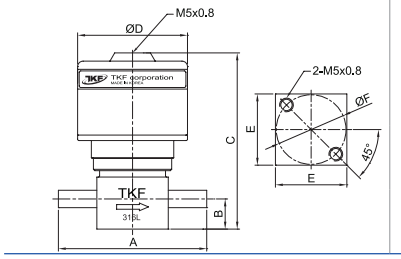	Butt Weld	1/4″	54	11	64.3	40	26	25.4	
		3/8″	69	16	83.8	55	37	28	
		1/2″	69	16	83.8	55	37	28	
		3/4″	150	22	89.8	55	37	28	

LOW PRESSURE PNEUMATIC DIAPHRAGM VALVE

HIGH DURABILITY TYPE

FEATURES

- Ultra high cycle life with high-speed actuation
- Cv range from 0.27
- Up to 392°F (200°C) capability with thermal actuators
- Permanently heat code laser marked;
  material traceable to original millcertificate of test

MAJOR SPECIFICATIONS

Size	1/4"
Cv Value	0.27
Orifice Size	4mm
Max. Working Pressure (G.)	1MPa
Operating Pressure (G.)	0.35~0.6MPa
Max. Working Temp.	STANDARD : 0°C ~ 120°C / THERMAL : 0°C ~ 200°C
Internal Leakage Allowance (He)	$1x10^{-10}$ Pa · m^3/s
Test Pressure ≤ 1×10^{-2} Torr	
Holding Time ≥ 15 sec.	
External Leakage Allowance (He)	$1x10^{-10}$ Pa · m^3/s
Test Pressure ≤ 1×10^{-2} Torr	
Holding Time ≥ 1 min.	
Particle Inspection (EP only)	No count
Pressure : 60~80psi N_2 Gas	
Sample Volume : 1CFM	
0.1μm and Larger	

PRODUCT GRADE

GRADE	AP	BA	EP
Inner Surface Roughness	Ry ≤ 25μm Cut off Length : 2.5mm Measuring Length : 12.5mm	Ry ≤ 3.0μm 10 μinch Ra(Avg.) Cut off Length : 0.8mm Measuring Length : 4mm	Ry ≤ 0.7μm 5 μinch Ra(Avg.) Cut off Length : 0.25mm Measuring Length : 1.25mm
Polishing	Machining Finish	Machining Finish	Polishing Finish

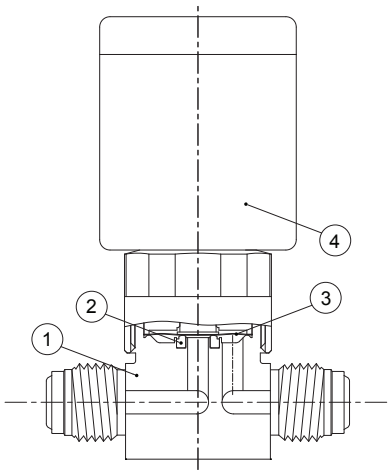

MATERIAL

NO.	NAME	MATERIAL
1	Body	316L Stainless Steel 316L Stainless Steel VAR
2	Seat	PFA
3	Diaphragm	Ni-Co Alloy
4	Actuator	Aluminum

ORDERING INFORMATION

S	4	HDPDV	–	VM	–	C	–	H	–	X1	–	P
Material	Size	Product		Connection		Operation Method		Option1		Option2		Grade

MATERIAL		SIZE		CONNECTION		OPERATION METHOD		OPTION		GRADE	
S	316L Stainless Steel	4	1/4″	VM	MFS Male	C	Normally Close	H	Heater Cartridge Holes	P	EP Grade
D	316L Stainless Steel VAR			VF	MFS Female			S	Position Sensor		
				TW	Butt Weld			V	Solenoid Valve		

STANDARD MODEL	CONNECTION	SIZE	A	B	C	D	E	F
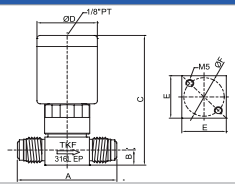	MFS Male	1/4″	58.4	11.2	86	38	28	25.4
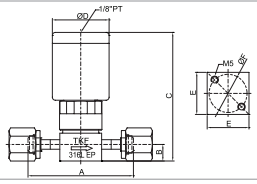	MFS Female	1/4″	70.6	11.2	86	38	28	25.4
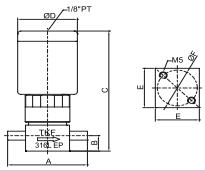	Butt Weld	1/4″	44.2	11.2	86	38	28	25.4

THERMAL MODEL	CONNECTION	SIZE	A	B	C	D	E	F
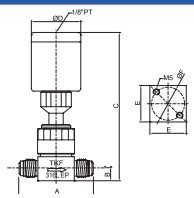	MFS Male	1/4″	58.4	11.2	114	38	28	25.4
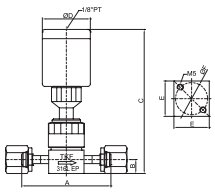	MFS Female	1/4″	70.6	11.2	114	38	28	25.4
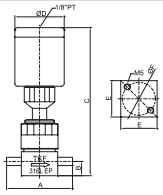	Butt Weld	1/4″	44.2	11.2	114	38	28	25.4

LOW PRESSURE MANUAL BLOCK DIAPHRAGM VALVE

STD TYPE

FEATURES

- Space-saving
- Minimal dead space
- Out-gas free
- Minimal particle generation
- Permanently heat code laser marked; material traceable to original mill certificate of test
- Electropolished, D.I. water cleaned, assembled, tested and packed in a certified clean room

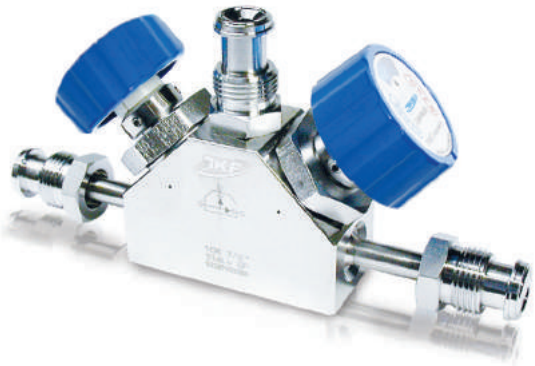

MAJOR SPECIFICATIONS

Size	1/4"	3/8", 1/2"
Cv Value	0.3	0.7
Orifice Size	4.5mm	7mm
Max. Working Pressure (G.)	1MPa	
Max. Working Temp.	PCTFE : -10°C ~ 80°C / PI, PFA : -10°C ~ 150°C	
Internal Leakage Allowance (He)	$1x10^{-10}$ Pa · m^3/s	
Test Pressure ≤ 1×10^{-2} Torr		
Holding Time ≥ 30 sec.		
External Leakage Allowance (He)	$1x10^{-10}$ Pa · m^3/s	
Test Pressure ≤ 1×10^{-2} Torr		
Holding Time ≥ 1 min.		
Particle Inspection (EP only)	No count	
Pressure : 60~80psi N_2 Gas		
Sample Volume : 1CFM		
0.1μm and Larger		

PRODUCT GRADE

GRADE	AP	BA	EP
Inner Surface Roughness	Ry ≤ 25μm Cut off Length : 2.5mm Measuring Length : 12.5mm	Ry ≤ 3.0μm 10 μinch Ra(Avg.) Cut off Length : 0.8mm Measuring Length : 4mm	Ry ≤ 0.7μm 5 μinch Ra(Avg.) Cut off Length : 0.25mm Measuring Length : 1.25mm
Polishing	Machining Finish	Machining Finish	Electro Polishing Finish

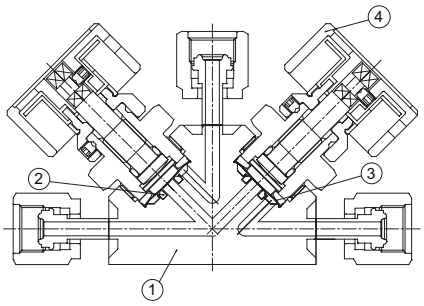

MATERIAL

NO.	NAME	MATERIAL
1	Body	316L Stainless Steel 316L Stainless Steel VAR
2	Seat	PCTFE / PI / PFA
3	Diaphragm	Ni-Co Alloy
4	Handle	Aluminum

ORDERING INFORMATION

S	4	BDVN	–	VM	–	1T23	–	X1	–	P
Material	Size	Product		Connection		Flow		Option		Grade

MATERIAL		SIZE		CONNECTION		FLOW	GRADE	
S	316L Stainless Steel	4	1/4″	VF	MFS Female	1T25	AP	AP Grade
D	316L Stainless Steel VAR	8	1/2″			5T12	BLANK	BA Grade
						1T23	P	EP Grade
						3T12		

MODEL	FLOW	MODEL	FLOW	MODEL	FLOW	MODEL	FLOW
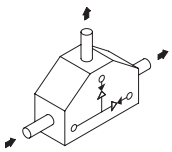	1T25	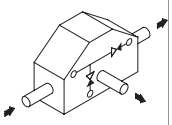	1T23	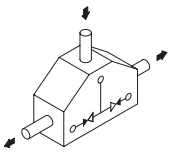	5T12	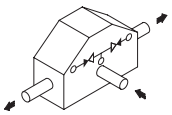	3T12

MODEL	FLOW	SIZE	A	B	C	D	E	F	G	H
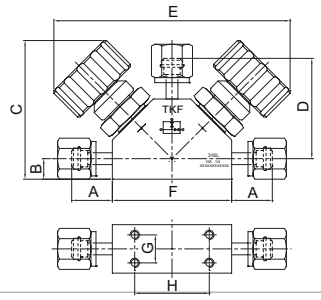	1T25	1/4″	21.8	11	74.4	53.8	126.7	64	15	40
		1/2″	23	16	90.2	71.5	145	82	20	55
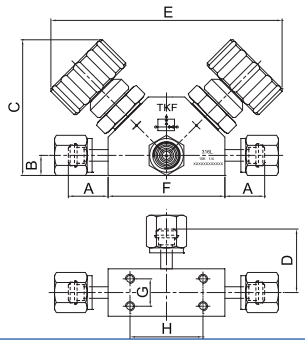	1T23	1/4″	21.8	11	74.4	34.8	126.7	64	15	40
		1/2″	23	16	90.2	41	145	82	20	55

LOW PRESSURE PNEUMATIC BLOCK DIAPHRAGM VALVE

STD TYPE

FEATURES

- Space-saving
- Minimal dead space
- Minimal particle generation
- Permanently heat code laser marked; material traceable to original mill certificate of test
- Minimal contributions of Moisture, Oxygen and Hydrocarbon
- Electropolished, D.I. water cleaned, assembled, tested and packed in a certified clean room

MAJOR SPECIFICATIONS

Size	1/4″	3/8″, 1/2″
Cv Value	0.3	0.7
Orifice Size	4.5mm	7mm
Max. Working Pressure (G.)	1MPa	
Operating Pressure (G.)	0.4 ~ 0.6MPa	
Max. Working Temp.	PCTFE : -10°C ~ 80°C / PI, PFA : -10°C ~ 150°C	
Internal Leakage Allowance (He)	$1x10^{-10}$ Pa · m^3/s	
Test Pressure ≤ 1×10^{-2} Torr		
Holding Time ≥ 15 sec.		
External Leakage Allowance (He)	$1x10^{-10}$ Pa · m^3/s	
Test Pressure ≤ 1×10^{-2} Torr		
Holding Time ≥ 1 min.		
Particle Inspection (EP only)	No count	
Pressure : 60~80psi N_2 Gas		
Sample Volume : 1CFM		
0.1μm and Larger		

PRODUCT GRADE

GRADE	AP	BA	EP
Inner Surface Roughness	Ry ≤ 25μm Cut off Length : 2.5mm Measuring Length : 12.5mm	Ry ≤ 3.0μm 10 μinch Ra(Avg.) Cut off Length : 0.8mm Measuring Length : 4mm	Ry ≤ 0.7μm 5 μinch Ra(Avg.) Cut off Length : 0.25mm Measuring Length : 1.25mm
Polishing	Machining Finish	Machining Finish	Electro Polishing Finish

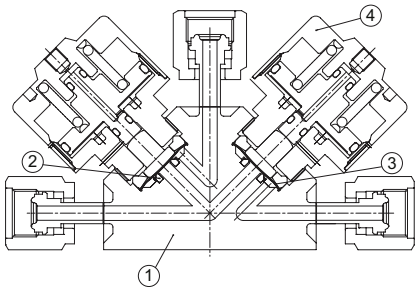

MATERIAL

NO.	NAME	MATERIAL
1	Body	316L Stainless Steel 316L Stainless Steel VAR
2	Seat	PCTFE / PI / PFA
3	Diaphragm	Ni-Co Alloy
4	Actuator	Aluminum

ORDERING INFORMATION

S	4	PBDVN	–	VM	–	1T23	–	C	–	X1	–	P
Material	Size	Product		Connection		Flow		Operation Method		Option		Grade

MATERIAL		SIZE		CONNECTION		FLOW	OPERATION METHOD		GRADE	
S	316L Stainless Steel	4	1/4″	VF	MFS Female	1T25	C	Normally Close	AP	AP Grade
D	316L Stainless Steel VAR					5T12	O	Normally Open	BLANK	BA Grade
						1T23			P	EP Grade
						3T12				

MODEL	FLOW	MODEL	FLOW	MODEL	FLOW	MODEL	FLOW
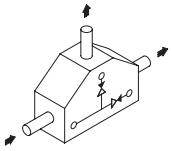	1T25	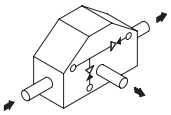	1T23	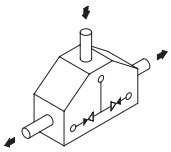	5T12	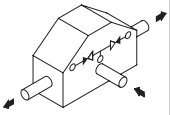	3T12

MODEL	FLOW	SIZE	A	B	C	D	E	F	G	H
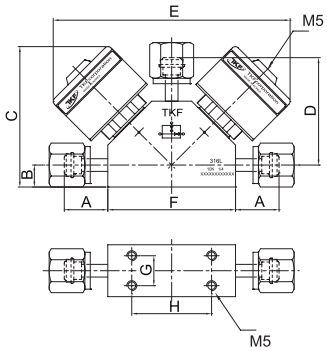	1T25	1/4″	21.8	11	70.4	53.8	118.7	64	15	40
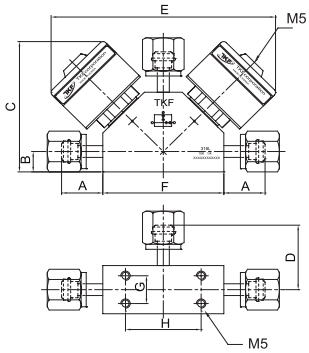	1T23	1/4″	21.8	11	70.4	34.8	118.7	64	15	40

LOW PRESSURE MANUAL DIAPHRAGM VALVE

SHUTOFF TYPE

FEATURES

- Shutoff type handle operation
- Low internal volume
- Minimal particle generation
- Minimal contributions of Moisture, Oxygen and Hydrocarbon
- Handle colors available upon request
- Lockable in the CLOSED position for safety

MAJOR SPECIFICATIONS

Size	1/4"	3/8", 1/2"	3/4"
Cv Value	0.3	0.7	0.7
Orifice Size	3.5mm	7mm	7mm
Max. Working Pressure (G.)	1MPa		
Max. Working Temp.	PCTFE : -10°C ~ 80°C / PI, PFA : -10°C ~ 150°C		
Internal Leakage Allowance (He)	$1x10^{-10}$ Pa · m^3/s		
Test Pressure ≤ 1×10^{-2} Torr			
Holding Time ≥ 15 sec.			
External Leakage Allowance (He)	$1x10^{-10}$ Pa · m^3/s		
Test Pressure ≤ 1×10^{-2} Torr			
Holding Time ≥ 1 min.			
Particle Inspection (EP only)	No count		
Pressure : 60~80psi N_2 Gas			
Sample Volume : 1CFM			
0.1μm and Larger			

PRODUCT GRADE

GRADE	AP	BA	EP
Inner Surface Roughness	Ry ≤ 25μm Cut off Length : 2.5mm Measuring Length : 12.5mm	Ry ≤ 3.0μm 10 μinch Ra(Avg.) Cut off Length : 0.8mm Measuring Length : 4mm	Ry ≤ 0.7μm 5 μinch Ra(Avg.) Cut off Length : 0.25mm Measuring Length : 1.25mm
Polishing	Machining Finish	Machining Finish	Electro Polishing Finish

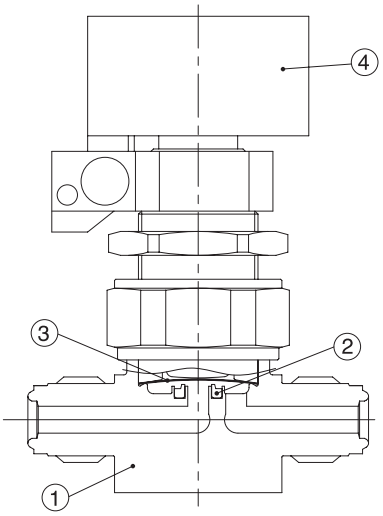

MATERIAL

NO.	NAME	MATERIAL
1	Body	316L Stainless Steel 316L Stainless Steel VAR 304 Stainless Steel
2	Seat	PCTFE / PI / PFA
3	Diaphragm	Ni-Co Alloy
4	Handle	Nylon

ORDERING INFORMATION

S	4	SODVN	–	VM	–	X1	–	P
Material	Size	Product		Connection		Option		Grade

MATERIAL		SIZE		CONNECTION		OPTION		GRADE	
S	316L Stainless Steel	4	1/4″	VM	MFS Male	×87	Locking	AP	AP Grade
D	316L Stainless Steel VAR	6	3/8″	VF	MFS Female	×27	Lock Nut	BLANK	BA Grade
4S	304 Stainless Steel	8	1/2″	SW	Lok			P	EP Grade
		12	3/4″	TW	Butt Weld				

MODEL	CONNECTION	SIZE	A	B	C	D	E	F	G	H	J	K
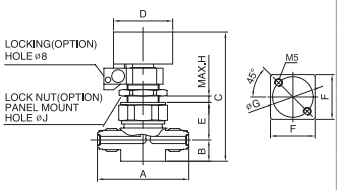	MFS Male	1/4″	57	11	77.1	37	24	26	25.4	5	20.5	
		3/8″	76.2	16	105.2	50	31.6	37	28	10	24.5	
		1/2″	76.2	16	105.2	50	31.6	37	28	10	24.5	
		3/4″	122	22	111.2	50	31.6	37	28	10	24.5	
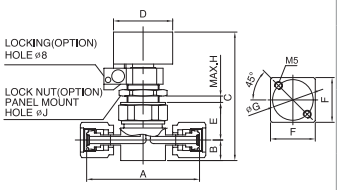	MFS Female	1/4″	70.6	11	77.1	37	24	26	25.4	5	20.5	
		3/8″	83	16	105.2	50	31.6	37	28	10	24.5	
		1/2″	83	16	105.2	50	31.6	37	28	10	24.5	
		3/4″	122	22	111.2	50	31.6	37	28	10	24.5	
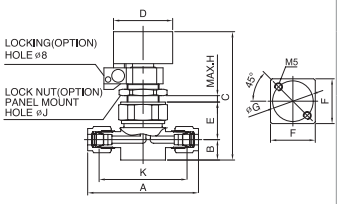	Lok	1/4″	69.5	11	77.1	37	24	26	25.4	5	20.5	55
		3/8″	82.5	16	105.2	50	31.6	37	28	10	24.5	68
		1/2″	91	16	105.2	50	31.6	37	28	10	24.5	70
		3/4″	106	22	111.2	50	31.6	37	28	10	24.5	84
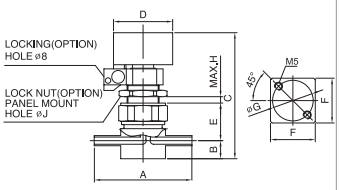	Butt Weld	1/4″	54	11	77.1	37	24	26	25.4	5	20.5	
		3/8″	69	16	105.2	50	31.6	37	28	10	24.5	
		1/2″	69	16	105.2	50	31.6	37	28	10	24.5	
		3/4″	150	22	111.2	50	31.6	37	28	10	24.5	

LOW PRESSURE MANUAL DIAPHRAGM VALVE

SHUTOFF TYPE

FEATURES

- Shutoff type handle operation
- Low internal volume
- Minimal particle generation
- Minimal contributions of Moisture, Oxygen and Hydrocarbon
- Handle colors available upon request
- Lockable in the CLOSED position for safety

MAJOR SPECIFICATIONS

Size	1/4"	3/8", 1/2"
Cv Value	0.3	0.7
Orifice Size	3.5mm	6.5mm
Max. Working Pressure (G.)	1MPa	
Max. Working Temp.	PCTFE : -10°C ~ 80°C / PI, PFA : -10°C ~ 150°C	
Internal Leakage Allowance (He)	$1x10^{-10}$ Pa · m^3/s	
Test Pressure ≤ 1×10^{-2} Torr		
Holding Time ≥ 15 sec.		
External Leakage Allowance (He)	$1x10^{-10}$ Pa · m^3/s	
Test Pressure ≤ 1×10^{-2} Torr		
Holding Time ≥ 1 min.		
Particle Inspection (EP only)	No count	
Pressure : 60~80psi N_2 Gas		
Sample Volume : 1CFM		
0.1μm and Larger		

PRODUCT GRADE

GRADE	AP	BA	EP
Inner Surface Roughness	Ry ≤ 25μm Cut off Length : 2.5mm Measuring Length : 12.5mm	Ry ≤ 3.0μm 10 μinch Ra(Avg.) Cut off Length : 0.8mm Measuring Length : 4mm	Ry ≤ 0.7μm 5 μinch Ra(Avg.) Cut off Length : 0.25mm Measuring Length : 1.25mm
Polishing	Machining Finish	Machining Finish	Electro Polishing Finish

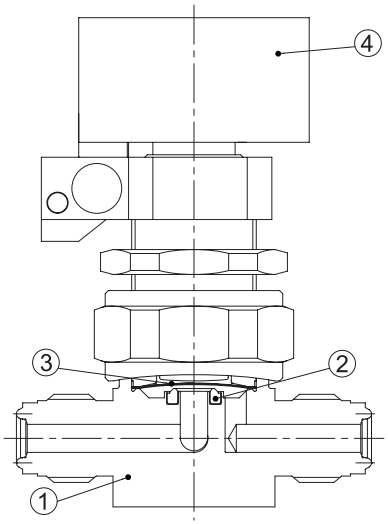

MATERIAL

NO.	NAME	MATERIAL
1	Body	316L Stainless Steel 316L Stainless Steel VAR 304 Stainless Steel
2	Seat	PCTFE / PI / PFA
3	Diaphragm	Ni-Co Alloy
4	Handle	Nylon

ORDERING INFORMATION

S	4	SODVN6	–	VM	–	X1	–	P
Material	Size	Product		Connection		Option		Grade

MATERIAL		SIZE		CONNECTION		OPTION		GRADE	
S	316L Stainless Steel	4	1/4″	VM	MFS Male	×87	Locking	AP	AP Grade
D	316L Stainless Steel VAR	6	3/8″	VF	MFS Female	×27	Lock Nut	BLANK	BA Grade
4S	Stainless Steel 304	8	1/2″	SW	Lok			P	EP Grade

MODEL	CONNECTION	SIZE	A	B	C	D	E	F	G	H	J	K
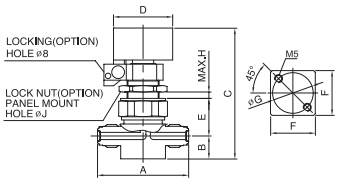	MFS Male	1/4″	57	14.3	80.4	37	24	26	25.4	7	20.5	
		3/8″	76.2	11.1	100.3	50	31.6	37	28.6	10	24.5	
		1/2″	76.2	11.1	100.3	50	31.6	37	28.6	10	24.5	
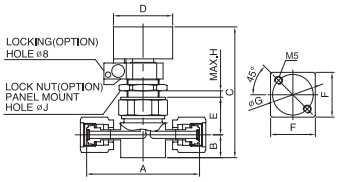	MFS Female	1/4″	70.6	14.3	80.4	37	24	26	25.4	7	20.5	
		3/8″	83	12.7	101.9	50	31.6	37	28.6	10	24.5	
		1/2″	83	12.7	101.9	50	31.6	37	28.6	10	24.5	
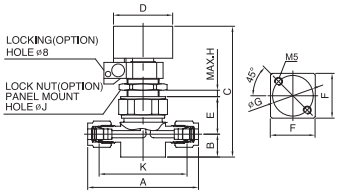	Lok	1/4″	69.5	14.3	80.4	37	24	26	25.4	7	20.5	55
		3/8″	82.5	12.7	101.9	50	31.6	37	28.6	10	24.5	68
		1/2″	91	12.7	101.9	50	31.6	37	28.6	10	24.5	70
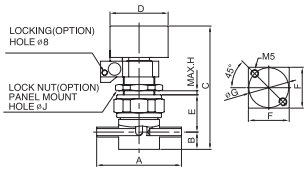	Butt Weld	1/4″	54	14.3	80.4	37	24	26	25.4	7	20.5	
		3/8″	69	12.7	101.9	50	31.6	37	28.6	10	24.5	
		1/2″	69	12.7	101.9	50	31.6	37	28.6	10	24.5	

LOW PRESSURE MANUAL DIAPHRAGM VALVE

BRANCH TYPE

FEATURES

- Reduced inner capacity
- Highly resistant to corrosion using nickel-cobalt alloy diaphragm
- Minimal particle generation
- Minimal contributions of Moisture, Oxygen and Hydrocarbon
- Permanently heat code laser marked; material traceable to original mill certificate of test
- Electropolished, D.I. water cleaned, assembled, tested and packed in a certified clean room

MAJOR SPECIFICATIONS

Size	1/4″	3/8″, 1/2″	3/4″
Cv Value	0.3	0.7	0.7
Orifice Size	4.5mm	7mm	7mm
Max. Working Pressure (G.)	1MPa		
Max. Working Temp.	PCTFE : -10°C ~ 80°C / PI, PFA : -10°C ~ 150°C		
Internal Leakage Allowance (He)	$1x10^{-10}$ Pa · m^3/s		
Test Pressure ≤ 1×10^{-2} Torr			
Holding Time ≥ 30 sec.			
External Leakage Allowance (He)	$1x10^{-10}$ Pa · m^3/s		
Test Pressure ≤ 1×10^{-2} Torr			
Holding Time ≥ 1 min.			
Particle Inspection (EP only)	No count		
Pressure : 60~80psi N_2 Gas			
Sample Volume : 1CFM			
0.1μm and Larger			

PRODUCT GRADE

0.3	AP	BA	EP
Inner Surface Roughness	Ry ≤ 25μm Cut off Length : 2.5mm Measuring Length : 12.5mm	Ry ≤ 3.0μm 10 μinch Ra(Avg.) Cut off Length : 0.8mm Measuring Length : 4mm	Ry ≤ 0.7μm 5 μinch Ra(Avg.) Cut off Length : 0.25mm Measuring Length : 1.25mm
Polishing	Machining Finish	Machining Finish	Electro Polishing Finish

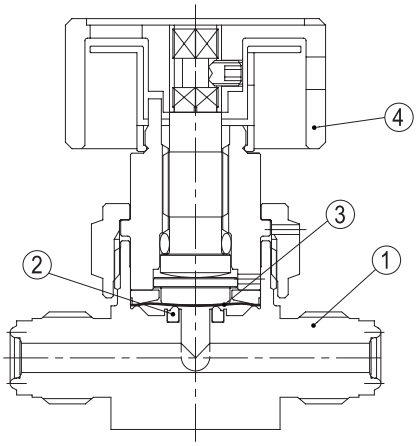

MATERIAL

NO.	NAME	MATERIAL
1	Body	316L Stainless Steel 316L Stainless Steel VAR 304 Stainless Steel
2	Seat	PCTFE / PI / PFA
3	Diaphragm	Ni-Co Alloy
4	Handle	Aluminum

ORDERING INFORMATION

S	4	DVN3	–	VM	–	12T3	–	X1	–	P
Material	Size	Product		Connection		Flow		Option		Grade

MATERIAL		SIZE		CONNECTION		FLOW		GRADE	
S	316L Stainless Steel	4	1/4″	VM	MFS Male	12T3	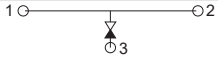	AP	AP Grade
D	316L Stainless Steel VAR	6	3/8″	VF	MFS Female			BLANK	BA Grade
4S	304 Stainless Steel	8	1/2″	SW	Lok	13T2	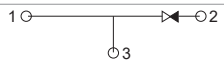	P	EP Grade
		12	3/4″	TW	Butt Weld				

MODEL	CONNECTION	SIZE	A	B	C	D	F	G	H
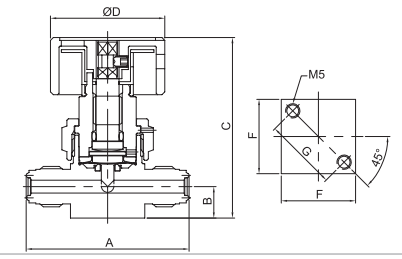	MFS Male	1/4″	57	11	64.3	40	26	25.4	
		3/8″	76.2	16	76.8	40	37	28	
		1/2″	76.2	16	76.8	40	37	28	
		3/4″	122	22	82.8	40	37	28	
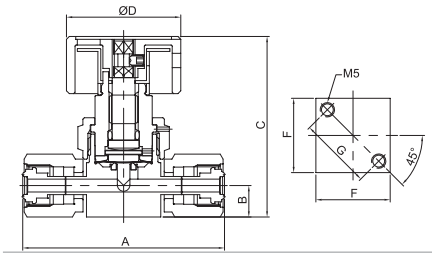	MFS Female	1/4″	70.6	11	64.3	40	26	25.4	
		3/8″	83	16	76.8	40	37	28	
		1/2″	83	16	76.8	40	37	28	
		3/4″	122	22	82.8	40	37	28	
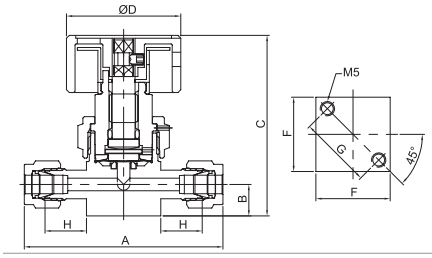	Lok	1/4″	69.5	11	64.3	40	26	25.4	14.5
		3/8″	82.5	16	76.8	40	37	28	15.5
		1/2″	91	16	76.8	40	37	28	16.5
		3/4″	106	22	82.8	40	37	28	23.5
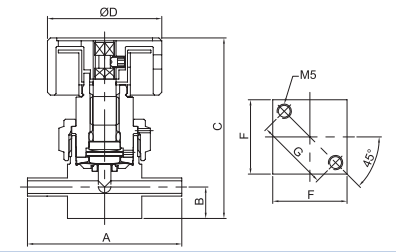	Butt Weld	1/4″	54	11	64.3	40	26	25.4	
		3/8″	69	16	76.8	40	37	28	
		1/2″	69	16	76.8	40	37	28	
		3/4″	150	22	82.8	40	37	28	

LOW PRESSURE PNEUMATIC DIAPHRAGM VALVE

BRANCH TYPE

FEATURES

- Reduced inner capacity
- Highly resistant to corrosion using nickel-cobalt alloy diaphragm
- Minimal particle generation
- Minimal contributions of Moisture, Oxygen and Hydrocarbon
- Permanently heat code laser marked; material traceable to original mill certificate of test
- Increased operation speed using aluminum piston

MAJOR SPECIFICATIONS

Size	1/4″	3/8″, 1/2″	3/4″
Cv Value	0.3	0.7	0.7
Orifice Size	4.5mm	7mm	7mm
Max. Working Pressure (G.)	1MPa		
Operating Pressure (G.)	0.4~0.6MPa		
Max. Working Temp.	PCTFE : -10°C ~ 80°C / PI, PFA : -10°C ~ 150°C		
Internal Leakage Allowance (He)	$1x10^{-10}$ Pa · m^3/s		
Test Pressure ≤ 1×10^{-2} Torr			
Holding Time ≥ 15 sec.			
External Leakage Allowance (He)	$1x10^{-10}$ Pa · m^3/s		
Test Pressure ≤ 1×10^{-2} Torr			
Holding Time ≥ 1 min.			
Particle Inspection (EP only)	No count		
Pressure : 60~80psi N_2 Gas			
Sample Volume : 1CFM			
0.1μm and Larger			

PRODUCT GRADE

GRADE	AP	BA	EP
Inner Surface Roughness	Ry ≤ 25μm Cut off Length : 2.5mm Measuring Length : 12.5mm	Ry ≤ 3.0μm 10 μinch Ra(Avg.) Cut off Length : 0.8mm Measuring Length : 4mm	Ry ≤ 0.7μm 5 μinch Ra(Avg.) Cut off Length : 0.25mm Measuring Length : 1.25mm
Polishing	Machining Finish	Machining Finish	Electro Polishing Finish

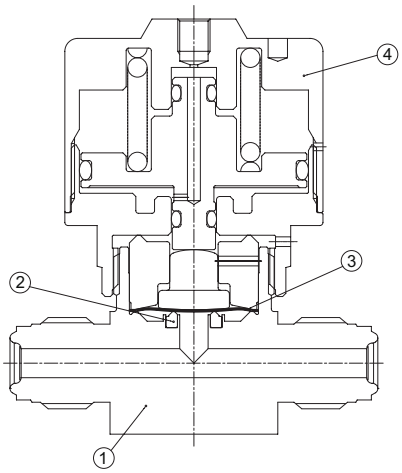

MATERIAL

NO.	NAME	MATERIAL
1	Body	316L Stainless Steel 316L Stainless Steel VAR 304 Stainless Steel
2	Seat	PCTFE / PI / PFA
3	Diaphragm	Ni-Co Alloy
4	Actuator	Aluminum

ORDERING INFORMATION

S	4	PDVN3	–	VM	–	12T3	–	C	–	X1	–	P
Material	Size	Product		Connection		Flow		Operation Method		Option		Grade

MATERIAL		SIZE		CONNECTION		FLOW		OPERATION METHOD	GRADE	
S	316L Stainless Steel	4	1/4″	VM	MFS Male	12T3	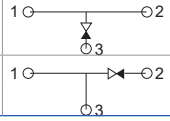	C Normally Close	AP	AP Grade
D	316L Stainless Steel VAR	6	3/8″	VF	MFS Female				BLANK	BA Grade
4S	304 Stainless Steel	8	1/2″	SW	Lok	13T2		O Normally Open	P	EP Grade
		12	3/4″	TW	Butt Weld					

MODEL	CONNECTION	SIZE	A	B	C	D	E	F	G
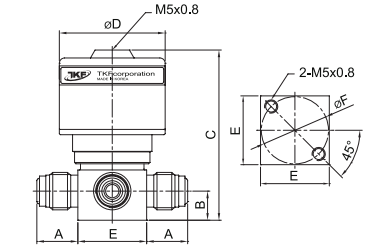	MFS Male	1/4″	15.5	11	64.3	40	26	25.4	
		3/8″	19.6	16	83.8	55	37	28	
		1/2″	19.6	16	83.8	55	37	28	
		3/4″	42.5	22	89.8	55	37	28	
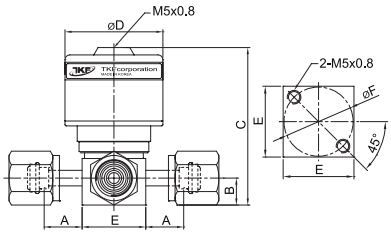	MFS Female	1/4″	22.3	11	64.3	40	26	25.4	
		3/8″	23	16	83.8	55	37	28	
		1/2″	23	16	83.8	55	37	28	
		3/4″	42.5	22	89.8	55	37	28	
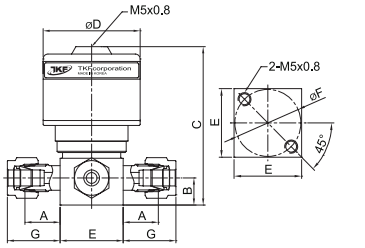	Lok	1/4″	14.5	11	64.3	40	26	25.4	26.7
		3/8″	15.5	16	83.8	55	37	28	22.8
		1/2″	16.5	16	83.8	55	37	28	26.8
		3/4″	23.5	22	89.8	55	37	28	34.5
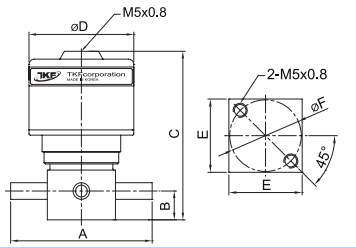	Butt Weld	1/4″	54	11	64.3	40	26	25.4	
		3/8″	69	16	83.8	55	37	28	
		1/2″	69	16	83.8	55	37	28	
		3/4″	150	22	89.8	55	37	28	

LOW PRESSURE MANUAL DIAPHRAGM VALVE

WELD TEE & VALVE TYPE

FEATURES

- Used in sub-main or after of the bulk gas piping system
- Developed for low cost
- Simple and easy to use
- Minimal contributions of Moisture, Oxygen and Hydrocarbon
- Component parts are reduced to minimum

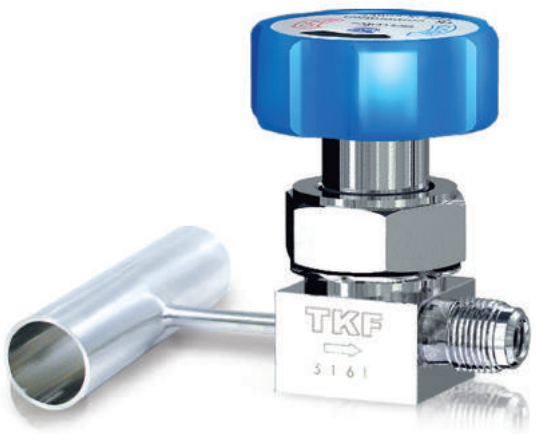

MAJOR SPECIFICATIONS

Size	1/4"	3/8", 1/2"	3/4"
Cv Value	0.3	0.7	0.7
Orifice Size	4.5mm	7mm	7mm
Max. Working Pressure (G.)	1MPa		
Max. Working Temp.	PCTFE : -10°C ~ 80°C / PI, PFA : -10°C ~ 150°C		
Internal Leakage Allowance (He)	$1x10^{-10}$ Pa · m^3/s		
Test Pressure ≤ 1×10^{-4} Torr			
Holding Time ≥ 30 sec.			
External Leakage Allowance (He)	$1x10^{-10}$ Pa · m^3/s		
Test Pressure ≤ 1×10^{-4} Torr			
Holding Time ≥ 1 min.			
Particle Inspection (EP only)	No count		
Pressure : 60~80psi N_2 Gas			
Sample Volume : 1CFM			
0.1μm and Larger			

PRODUCT GRADE

GRADE	AP	BA	EP
Inner Surface Roughness	Ry ≤ 25μm Cut off Length : 2.5mm Measuring Length : 12.5mm	Ry ≤ 3.0μm 10 μinch Ra(Avg.) Cut off Length : 0.8mm Measuring Length : 4mm	Ry ≤ 0.7μm 5 μinch Ra(Avg.) Cut off Length : 0.25mm Measuring Length : 1.25mm
Polishing	Machining Finish	Machining Finish	Electro Polishing Finish

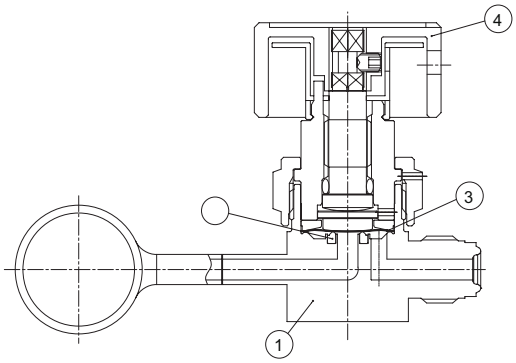

MATERIAL

NO.	NAME	MATERIAL
1	Body	316L Stainless Steel 316L Stainless Steel VAR 304 Stainless Steel
2	Seat	PCTFE / PI / PFA
3	Diaphragm	Ni-Co Alloy
4	Handle	Aluminum

ORDERING INFORMATION

S	20×T4	TDVN	–	VM	–	X1	–	P
Material	Size	Product		Connection		Option		Grade

MATERIAL		SIZE		CONNECTION		GRADE	
S	316L Stainless Steel	20×T4	20A×1/4″	VM	MFS Male	AP	AP Grade
D	316L Stainless Steel VAR	20×T6	20A×3/8″	VF	MFS Female	BLANK	BA Grade
4S	304 Stainless Steel	20×T8	20A×1/2″	SW	Lok	P	EP Grade
		20×T12	20A×3/4″	TW	Butt Weld		

MODEL	CONNECTION	SIZE	A	B	C	D	E	H
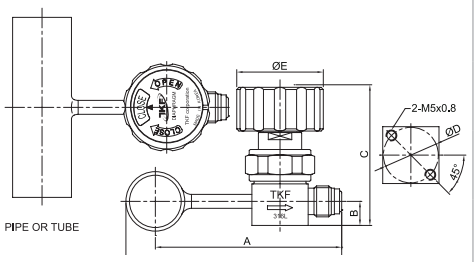	MFS Male	1/4″	98.5	11	64.3	26	40	115.5
		3/8″	122.6	16	76.8	28	40	136.2
		1/2″	122.6	16	76.8	28	40	136.2
		3/4″	158.9	22	82.8	28	40	172.5
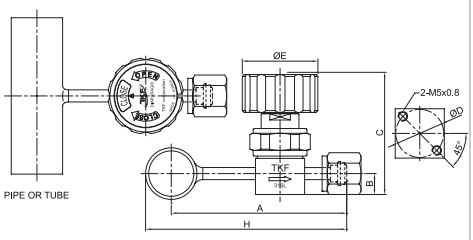	MFS Female	1/4″	105.9	11	64.3	26	40	122.9
		3/8″	114.5	16	76.8	28	40	131.5
		1/2″	114.5	16	76.8	28	40	131.5
		3/4″	141.8	22	82.8	28	40	172.5
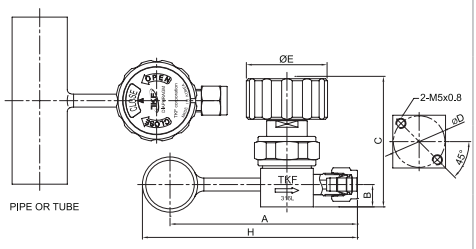	Lok	1/4″	105	11	64.3	26	40	114.7
		3/8″	118.5	16	76.8	28	40	135.5
		1/2″	118.5	16	76.8	28	40	135.5
		3/4″	155	22	82.8	28	40	168.6
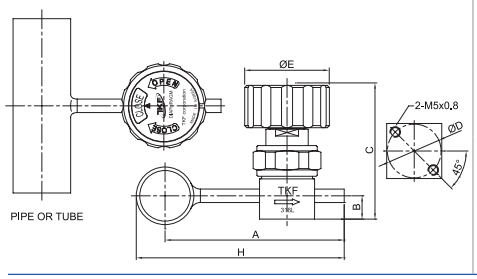	Butt Weld	1/4″	97.2	11	64.3	26	40	114.2
		3/8″	126	16	76.8	28	40	143
		1/2″	126	16	76.8	28	40	143
		3/4″	155	16	82.8	28	40	168.6

LOW PRESSURE MANUAL DIAPHRAGM VALVE

WELD TEE & VALVE TYPE

FEATURES

- Used in sub-main or after of the bulk gas piping system
- Developed for low cost
- Simple and easy to use
- Minimal contributions of Moisture, Oxygen and Hydrocarbon
- Component parts are reduced to minimum

MAJOR SPECIFICATIONS

Size	1/4"	3/8", 1/2"	3/4"
Cv Value	0.3	0.7	0.7
Orifice Size	4.5mm	6.5mm	6.5mm
Max. Working Pressure (G.)	1MPa		
Max. Working Temp.	PCTFE : -10°C ~ 80°C / PI, PFA : -10°C ~ 150°C		
Internal Leakage Allowance (He)	$1x10^{-10}$ Pa · m^3/s		
Test Pressure ≤ 1×10^{-4} Torr			
Holding Time ≥ 30 sec.			
External Leakage Allowance (He)	$1x10^{-10}$ Pa · m^3/s		
Test Pressure ≤ 1×10^{-4} Torr			
Holding Time ≥ 1 min.			
Particle Inspection (EP only)	No count		
Pressure : 60~80psi N_2 Gas			
Sample Volume : 1CFM			
0.1μm and Larger			

PRODUCT GRADE

GRADE	AP	BA	EP
Inner Surface Roughness	Ry ≤ 25μm Cut off Length : 2.5mm Measuring Length : 12.5mm	Ry ≤ 3.0μm 10 μinch Ra(Avg.) Cut off Length : 0.8mm Measuring Length : 4mm	Ry ≤ 0.7μm 5 μinch Ra(Avg.) Cut off Length : 0.25mm Measuring Length : 1.25mm
Polishing	Machining Finish	Machining Finish	Electro Polishing Finish

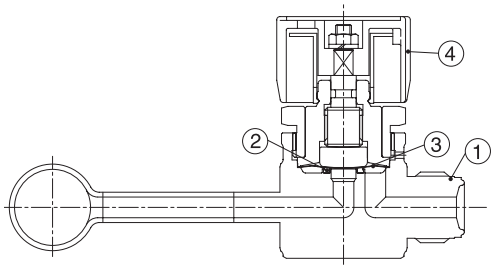

MATERIAL

NO.	NAME	MATERIAL
1	Body	316L Stainless Steel 316L Stainless Steel VAR 304 Stainless Steel
2	Seat	PCTFE / PI / PFA
3	Diaphragm	Ni-Co Alloy
4	Handle	HI-100

ORDERING INFORMATION

S	20×T4	TDV2	–	VM	–	X1	–	P
Material	Size	Product		Connection		Option		Grade

MATERIAL		SIZE		CONNECTION		GRADE	
S	316L Stainless Steel	20×T4	20A×1/4″	VM	MFS Male	AP	AP Grade
D	316L Stainless Steel VAR	20×T6	20A×3/8″	VF	MFS Female	BLANK	BA Grade
4S	304 Stainless Steel	20×T8	20A×1/2″	SW	Lok	P	EP Grade
		20×T12	20A×3/4″	TW	Butt Weld		

MODEL	CONNECTION	SIZE	A	B	C	D	E	H
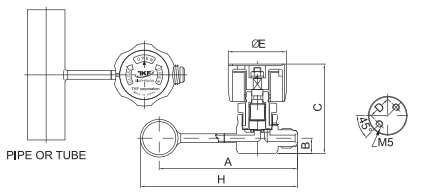	MFS Male	1/4″	99.9	11	66	17	45	113.5
		3/8″	121.5	16	77	28	45	135.1
		1/2″	121.5	16	77	28	45	135.1
		3/4″	158.9	22	85	28	45	172.5
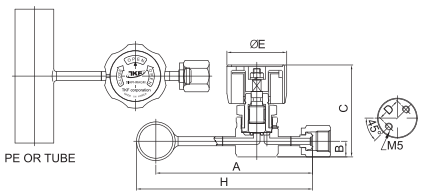	MFS Female	1/4″	105.9	11	66	17	45	123.8
		3/8″	135.8	16	77	28	45	149.4
		1/2″	135.8	16	77	28	45	149.4
		3/4″	141.8	22	85	28	45	155.4
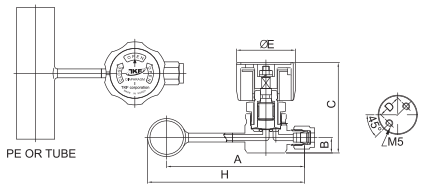	Lok	1/4″	98.4	11	66	17	45	112
		3/8″	117.5	16	77	28	45	131.1
		1/2″	118.5	16	77	28	45	132.1
		3/4″	155	22	85	28	45	168.6
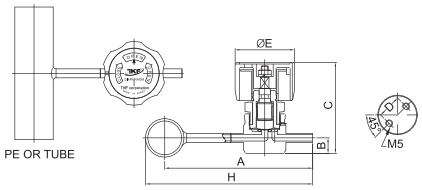	Butt Weld	1/4″	138.4	11	66	17	45	152
		3/8″	157	16	77	28	45	170.6
		1/2″	157	16	77	28	45	170.6
		3/4″	155	22	85	28	45	168.6

DOUBLE DUTY DIAPHRAGM VALVE

STD TYPE

FEATURES

- Low internal volume
- Minimal particle generation
- Minimal contributions of moisture, Oxygen and Hydrocarbon
- Permanently heat code laser marked ; material traceable to original mill certificate of test
- Ni-Co Alloy and custom configurations available upon request

PATENT NUMBER

- 10-2004-0074464
- 20-2004-0026738

MAJOR SPECIFICATIONS

Size	1/4"
Cv Value	0.3
Orifice Size	4.5mm
Max. Working Pressure (G.)	1MPa
Operating Pressure (G.)	0.4~0.6MPa
Max. Working Temp.	PCTFE : -10°C ~ 80°C / PI, PFA : -10°C ~ 150°C
Internal Leakage Allowance (He)	$1x10^{-10}$ Pa · m^3 /s
Test Pressure ≤ 1×10^{-2} Torr	
Holding Time ≥ 15 sec.	
External Leakage Allowance (He)	$1x10^{-10}$ Pa · m^3 /s
Test Pressure ≤ 1×10^{-2} Torr	
Holding Time ≥ 1 min.	
Particle Inspection (EP only)	No count
Pressure : 60~80psi N_2 Gas	
Sample Volume : 1CFM	
0.1μm and Larger	

PRODUCT GRADE

GRADE	AP	BA	EP
Inner Surface Roughness	Ry ≤ 25μm Cut off Length : 2.5mm Measuring Length : 12.5mm	Ry ≤ 3.0μm 10 μinch Ra(Avg.) Cut off Length : 0.8mm Measuring Length : 4mm	Ry ≤ 0.7μm 5 μinch Ra(Avg.) Cut off Length : 0.25mm Measuring Length : 1.25mm
Polishing	Machining Finish	Machining Finish	Electro Polishing Finish

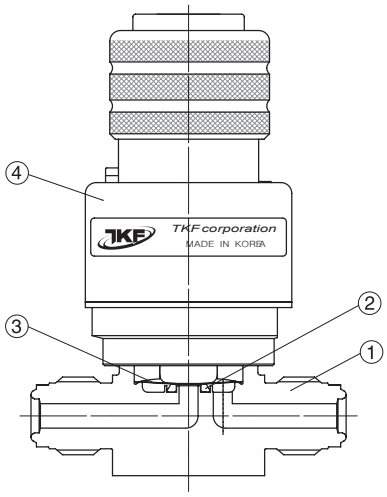

MATERIAL

NO.	NAME	MATERIAL
1	Body	316L Stainless Steel 316L Stainless Steel VAR
2	Seat	PCTFE / PI / PFA
3	Diaphragm	Ni-Co Alloy
4	Actuator	Aluminum

ORDERING INFORMATION

S	4	FPDVN	–	VM	–	C	–	X1	–	P
Material	Size	Product		Connection		Operation Method		Option		Grade

MATERIAL		SIZE		CONNECTION		OPERATION METHOD		GRADE	
S	316L Stainless Steel	4	1/4″	VM	MFS Male	C	Normally Close	AP	AP Grade
D	316L Stainless Steel VAR			VF	MFS Female	O	Normally Open	BLANK	BA Grade
				SW	Lok			P	EP Grade
				TW	Butt Weld				

MODEL	CONNECTION	MFS MALE
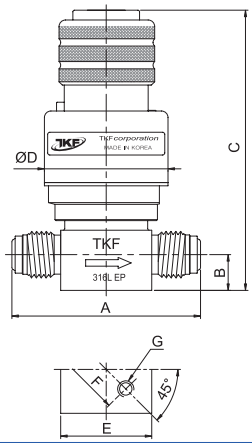	SIZE	1/4″
	A	57
	B	11
	C	86
	D	ø38
	E	26
	F	25.4
	G	M5-TAP8

MODEL	CONNECTION	MFS FEMALE
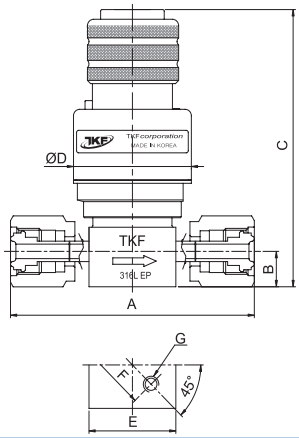	SIZE	1/4″
	A	70.6
	B	11
	C	86
	D	ø38
	E	26
	F	25.4
	G	M5-TAP8

MODEL	CONNECTION	LOK
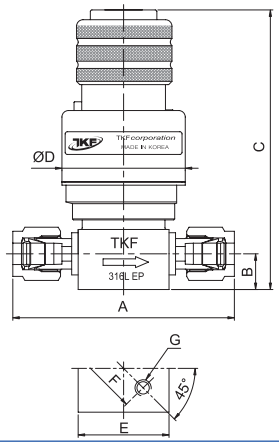	SIZE	1/4″
	A	69.5
	B	11
	C	86
	D	ø38
	E	26
	F	25.4
	G	M5-TAP8

MODEL	CONNECTION	BUTT WELD
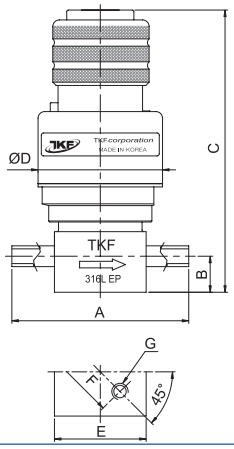	SIZE	1/4″
	A	54
	B	11
	C	86
	D	ø38
	E	26
	F	25.4
	G	M5-TAP8

LOW PRESSURE DUAL FLOW PNEUMATIC DIAPHRAGM VALVE

STD TYPE

FEATURES

- Reduced inner capacity
- Highly resistant to corrosion using nickel-cobalt alloy diaphragm
- Minimal particle generation
- Minimal contributions of Moisture, Oxygen and Hydrocarbon
- Permanently heat code laser marked, material traceable to original mill certificate of test
- Increased operation speed using aluminum piston

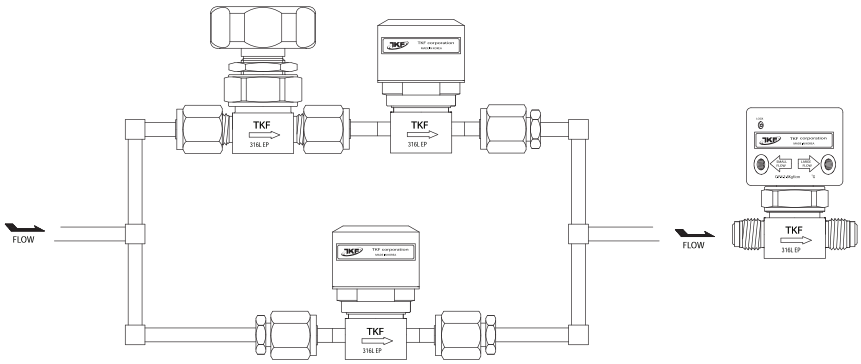

MAJOR SPECIFICATIONS

Size	1/4″	3/8″, 1/2″	3/4″
Cv Value	0.3	0.7	0.7
Orifice Size	3.5mm	7mm	7mm
Max. Working Pressure (G.)	1MPa		
Operating Pressure (G.)	0.4 ~ 0.6MPa		
Max. Working Temp.	PCTFE : -10°C ~ 80°C / PI, PFA : -10°C ~ 150°C		
Internal Leakage Allowance (He)	$1x10^{-10}$ Pa · m^3/s		
Test Pressure ≤ $1×10^{-2}$ Torr			
Holding Time ≥ 15 sec.			
External Leakage Allowance (He)	$1x10^{-10}$ Pa · m^3/s		
Test Pressure ≤ $1×10^{-2}$ Torr			
Holding Time ≥ 1 min.			
Particle Inspection (EP only)	No count		
Pressure : 60~80psi N_2 Gas			
Sample Volume : 1CFM			
0.1μm and Larger			

PRODUCT GRADE

GRADE	AP	BA	EP
Inner Surface Roughness	Ry ≤ 25μm Cut off Length : 2.5mm Measuring Length : 12.5mm	Ry ≤ 3.0μm 10 μinch Ra(Avg.) Cut off Length : 0.8mm Measuring Length : 4mm	Ry ≤ 0.7μm 5 μinch Ra(Avg.) Cut off Length : 0.25mm Measuring Length : 1.25mm
Polishing	Machining Finish	Machining Finish	Electro Polishing Finish

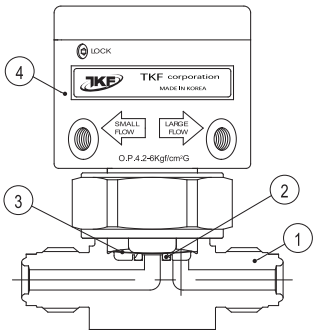

MATERIAL

NO.	NAME	MATERIAL
1	Body	316L Stainless Steel 316L Stainless Steel VAR 304 Stainless Steel
2	Seat	PCTFE / PI / PFA
3	Diaphragm	Ni-Co Alloy
4	Actuator	Aluminum

ORDERING INFORMATION

S	4	PSDVN	–	VM	–	C	–	X1	–	P
Material	Size	Product		Connection		Operation Method		Option		Grade

MATERIAL		SIZE		CONNECTION		OPERATION METHOD		GRADE	
S	316L Stainless Steel	4	1/4″	VM	MFS Male	C	Normally Close	AP	AP Grade
D	316L Stainless Steel VAR	6	3/8″	VF	MFS Female			BLANK	BA Grade
4S	304 Stainless Steel	8	1/2″	SW	Lok			P	EP Grade
		12	3/4″	TW	Butt Weld				

MODEL	CONNECTION	SIZE	A	B	C	D	E	F	G
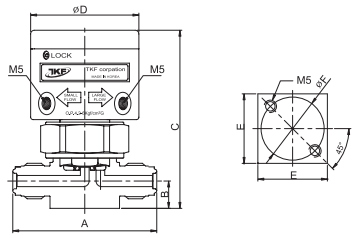	MFS Male	1/4″	57	11	77.2	43.6	26	25.4	
		3/8″	76.2	16	98.6	60	37	28	
		1/2″	76.2	16	98.6	60	37	28	
		3/4″	122	22	104.6	60	37	28	
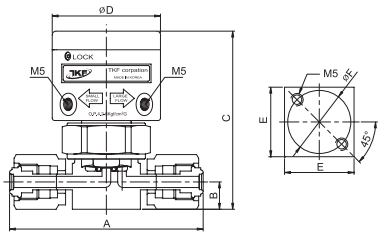	MFS Female	1/4″	70.6	11	77.2	43.6	26	25.4	
		3/8″	83	16	98.6	60	37	28	
		1/2″	83	16	98.6	60	37	28	
		3/4″	122	22	104.6	60	37	28	
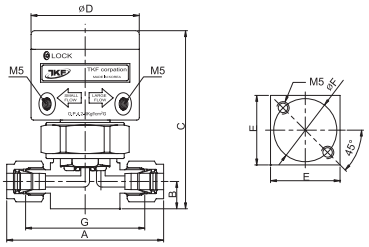	Lok	1/4″	69.5	11	77.2	43.6	26	25.4	55
		3/8″	82.5	16	98.6	60	37	28	68
		1/2″	91	16	98.6	60	37	28	70
		3/4″	106	22	104.6	60	37	28	84
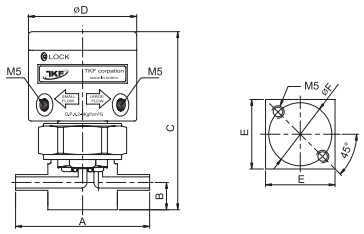	Butt Weld	1/4″	54	11	77.2	43.6	26	25.4	
		3/8″	69	16	98.6	60	37	28	
		1/2″	69	16	98.6	60	37	28	
		3/4″	150	22	98.6	60	37	28	

LOW PRESSURE METAL DIAPHRAGM METERING VALVE

FLOW CONTROL TYPE

FEATURES

- Metal diaphragm metering valve
- Cv range from 0.25
- Valve for use in temperatures of up to 150°C
- Permanently heat code laser marked;
  material traceable to original millcertificate of test

MAJOR SPECIFICATIONS

Size	1/4"
Cv Value	0.25
Orifice Size	4.5mm
Max. Working Pressure (G.)	1MPa
Max. Working Temp.	-10°C ~ 150°C
External Leakage Allowance (He)	$1x10^{-10}$ Pa · m^3/s
Test Pressure ≤ 1×10^{-2} Torr	
Holding Time ≥ 1 min.	
Particle Inspection (EP only)	No count
Pressure : 60~80psi N_2 Gas	
Sample Volume : 1CFM	
0.1μm and Larger	

PRODUCT GRADE

GRADE	AP	BA	EP
Inner Surface Roughness	Ry ≤ 25μm Cut off Length : 2.5mm Measuring Length : 12.5mm	Ry ≤ 3.0μm 10 μinch Ra(Avg.) Cut off Length : 0.8mm Measuring Length : 4mm	Ry ≤ 0.7μm 5 μinch Ra(Avg.) Cut off Length : 0.25mm Measuring Length : 1.25mm
Polishing	Machining Finish	Machining Finish	Electro Polishing Finish

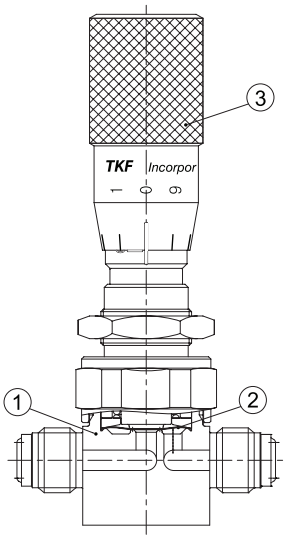

MATERIAL

NO.	NAME	MATERIAL
1	Body	316L Stainless Steel 316L Stainless Steel VAR
2	Diaphragm	Ni-Co Alloy
3	Handle	Aluminum

ORDERING INFORMATION

S	4	MDMV	–	VM	–	X1	–	P
Material	Size	Product		Connection		Option		Grade

MATERIAL		SIZE		CONNECTION		GRADE	
S	316L Stainless Steel	4	1/4″	VM	MFS Male	P	EP Grade
D	316L Stainless Steel VAR			VF	MFS Female		

STANDARD MODEL	CONNECTION	SIZE	A	B	C	D	E	F
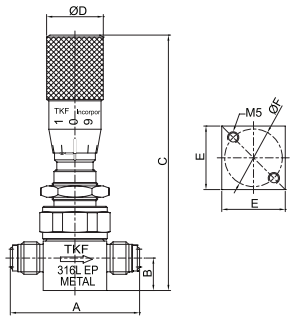	MFS Male	1/4″	57	11	119.3	25	26	25.4
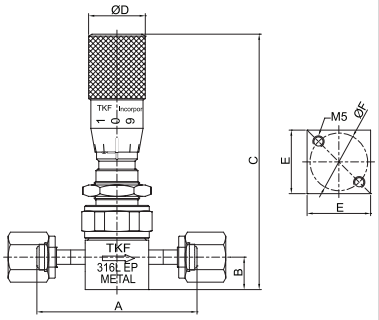	MFS Female	1/4″	70.6	11	119.3	25	26	25.4

LOW PRESSURE MANUAL DIAPHRAGM VALVE

FORGED BODY TYPE

FEATURES

- Forged body using round bar stock
- Low internal volume
- Minimal particle generation
- Minimal contributions of Moisture, Oxygen and Hydrocarbon
- Permanently heat code laser marked; material traceable to original mill certificate of test
- Hastelloy® C-22™ and custom configurations available upon request

MAJOR SPECIFICATIONS

Size	1/4"	3/8", 1/2"
Cv Value	0.3	0.7
Orifice Size	4.4mm	7mm
Max. Working Pressure (G.)	1MPa	
Max. Working Temp.	PCTFE : -10°C ~ 80°C / PI, PFA : -10°C ~ 150°C	
Internal Leakage Allowance (He)	$1x10^{-10}$ Pa · m^3/s	
Test Pressure ≤ 1×10^{-2} Torr		
Holding Time ≥ 30 sec.		
External Leakage Allowance (He)	$1x10^{-10}$ Pa · m^3/s	
Test Pressure ≤ 1×10^{-2} Torr		
Holding Time ≥ 1 min.		
Particle Inspection (EP only)	No count	
Pressure : 60~80psi N_2 Gas		
Sample Volume : 1CFM		
0.1μm and Larger		

PRODUCT GRADE

GRADE	AP	BA	EP
Inner Surface Roughness	Ry ≤ 25μm Cut off Length : 2.5mm Measuring Length : 12.5mm	Ry ≤ 3.0μm 10 μinch Ra(Avg.) Cut off Length : 0.8mm Measuring Length : 4mm	Ry ≤ 0.7μm 5 μinch Ra(Avg.) Cut off Length : 0.25mm Measuring Length : 1.25mm
Polishing	Machining Finish	Machining Finish	Electro Polishing Finish

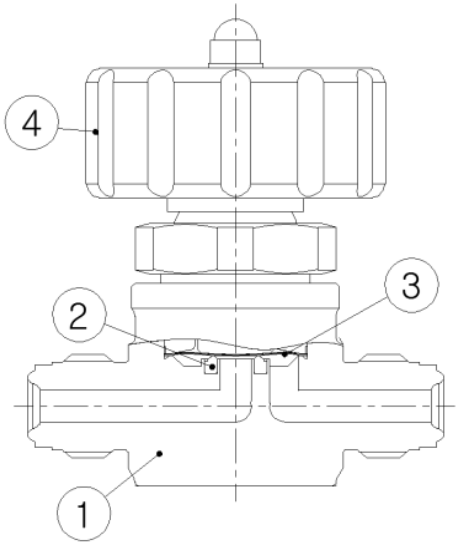

MATERIAL

NO.	NAME	MATERIAL
1	Body	316L Stainless Steel 316L Stainless Steel VAR 304 Stainless Steel
2	Seat	PCTFE / PI / PFA
3	Diaphragm	Ni-Co Alloy
4	Handle	ABS

ORDERING INFORMATION

S	4	DVN2	—	VM	—	X1	—	P
Body Material	Size	Product		Connection Typ		Option		Grade

MATERIAL		SIZE		CONNECTION		GRADE	
S	316L Stainless Steel	4	1/4"	VM	MFS Male	AP	AP Grade
D	316L Stainless Steel VAR	6	3/8"	VF	MFS Female	BLANK	BA Grade
4S	304 Stainless Steel	8	1/2"	SW	Lok	P	EP Grade
				TW	Butt Weld		

MODEL	CONNECTION	SIZE	A	B	C	D	E	F	G
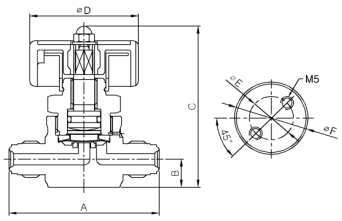	MFS Male	1/4"	58	11	65.3	42	17	28	
		3/8"	76	16	75.5	42	28	38	
		1/2"	76	16	75.5	42	28	38	
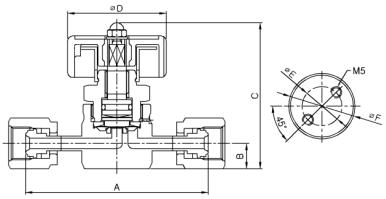	MFS Female	1/4"	78	11	65.3	42	17	28	
		3/8"	104.6	16	75.5	42	28	38	
		1/2"	104.6	16	75.5	42	28	38	
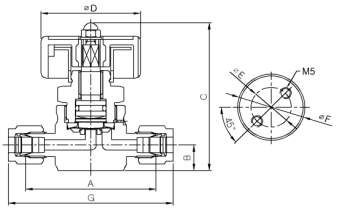	Lok	1/4"	69.3	11	65.3	42	17	28	55
		3/8"	82.5	16	75.5	42	28	38	68
		1/2"	90.2	16	75.5	42	28	38	70
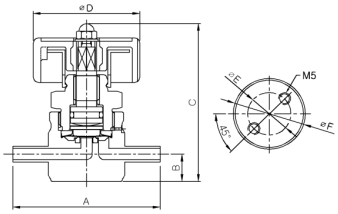	Butt Weld	1/4"	58	11	65.3	42	17	28	
		3/8"	72	16	75.5	42	28	38	
		1/2"	72	16	75.5	42	28	38	

HIGH FLOW MANUAL DIAPHRAGM VALVE

STD TYPE

FEATURES

- Internally threadless and springless
- Fully functional from a vacuum to 275psig
- Aerodynamic, fully swept flow passages
- Minimum particle generation and particle areas
- 100% Helium leak tested

MAJOR SPECIFICATIONS

Size	1/2"	3/4", 1"
Cv Value	2.8	3.5
Max. Working Pressure (G.)	1.86MPa	
Max. Working Temp.	-10°C ~ 80°C	
Internal Leakage Allowance (He)	$1x10^{-10}$ Pa · m^3/s	
Test Pressure ≤ 1×10^{-2} Torr		
Holding Time ≥ 30 sec.		
External Leakage Allowance (He)	$1x10^{-10}$ Pa · m^3/s	
Test Pressure ≤ 1×10^{-2} Torr		
Holding Time ≥ 1 min.		
Particle Inspection (EP only)	No count	
Pressure : 60~80psi N_2 Gas		
Sample Volume : 1CFM		
0.1μm and Larger		

PRODUCT GRADE

GRADE	AP	BA	EP
Inner Surface Roughness	Ry ≤ 25μm Cut off Length : 2.5mm Measuring Length : 12.5mm	Ry ≤ 3.0μm 10 μinch Ra(Avg.) Cut off Length : 0.8mm Measuring Length : 4mm	Ry ≤ 0.7μm 5 μinch Ra(Avg.) Cut off Length : 0.25mm Measuring Length: 1.25mm
Polishing	Machining Finish	Machining Finish	Electro Polishing Finish

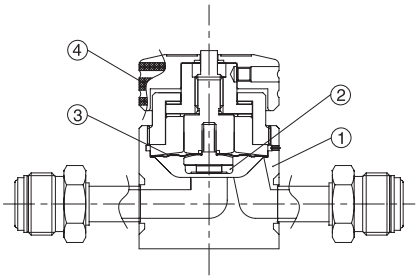

MATERIAL

NO.	NAME	MATERIAL
1	Body	316L Stainless Steel 316L Stainless Steel VAR 304 Stainless Steel
2	Disk	PCTFE
3	Diaphragm	316L Stainless Steel
4	Handle	Aluminum

ORDERING INFORMATION

S	8	HFDV	–	VM	–	P2	–	PVF	–	X1	–	P
Material	Size	Product		Connection		Purge Port		Purge Port Connection		Option		Grade

MATERIAL		SIZE		CONNECTION	
S	316L Stainless Steel	8	1/2″	VM	MFS Male
D	316L Stainless Steel VAR	12	3/4″	VF	MFS Female
4S	304 Stainless Steel	16	1″	TW	Butt Weld

PURGE PORT LOCATION		PURGE PORT CONNECTIONS		GRADE	
P0	Outlet Side	PVM	1/4″ MFS Male	AP	AP Grade
P1	Inlet and Outlet	PVF	1/4″ MFS Female	BLANK	BA Grade
P2	Inlet Side			P	EP Grade
Blank	No Purge Port				

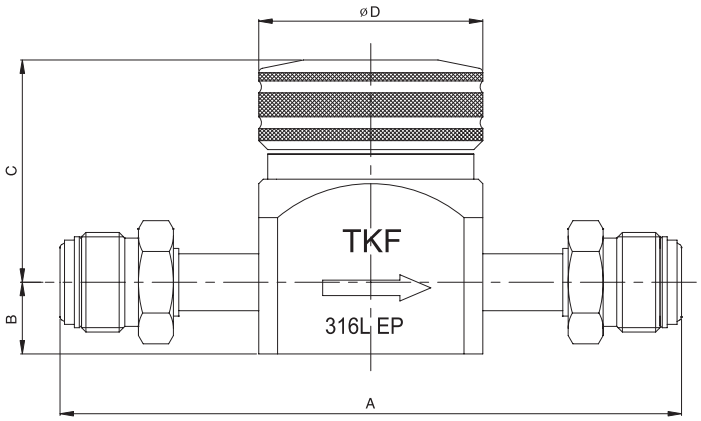

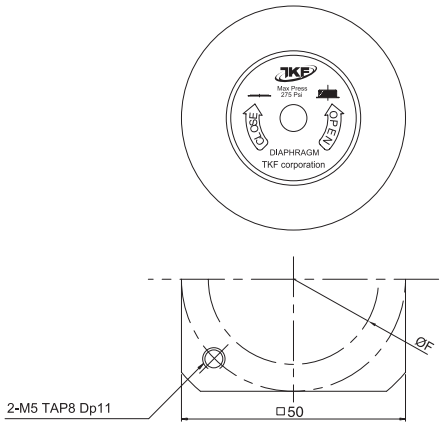

SIZE	CONNECTION	A	B	C	D	E
1/2″	VM	138.7	16	53.5	50	50
	VF	138.7	16	53.5	50	50
	TW	150	16	53.5	50	50
3/4″	VM	157.0	17.5	56.5	50	50
	VF	157.0	17.5	56.5	50	50
	TW	150	17.5	56.5	50	50
1″	VM	166	17.5	56.5	50	50
	VF	166	17.5	56.5	50	50
	TW	150	17.5	56.5	50	50

ULTRA HIGH FLOW MANUAL DIAPHRAGM VALVE

STD TYPE

FEATURES

- Internally threadless and springless
- Fully functional from a vacuum to 275psig
- Aerodynamic, fully swept flow passages
- Minimum particle generation and particle areas
- 100% Helium leak tested

MAJOR SPECIFICATIONS

Size	3/4", 1", 1-1/2", 2"
Cv Value	10
Max. Working Pressure (G.)	1.86MPa
Max. Working Temp.	-10°C ~ 80°C
Internal Leakage Allowance (He) Test Pressure ≤ 1×10^{-2} Torr Holding Time ≥ 30 sec.	$1x10^{-10}$ Pa · m^3/s
External Leakage Allowance (He) Test Pressure ≤ 1×10^{-2} Torr Holding Time ≥ 1 min.	$1x10^{-10}$ Pa · m^3/s
Particle Inspection (EP only) Pressure : 60~80psi N_2 Gas Sample Volume : 1CFM 0.1μm and Larger	No count

PRODUCT GRADE

GRADE	AP	BA	EP
Inner Surface Roughness	Ry ≤ 25μm Cut off Length : 2.5mm Measuring Length : 12.5mm	Ry ≤ 3.0μm 10 μinch Ra(Avg.) Cut off Length : 0.8mm Measuring Length : 4mm	Ry ≤ 0.7μm 5 μinch Ra(Avg.) Cut off Length : 0.25mm Measuring Length : 1.25mm
Polishing	Machining Finish	Machining Finish	Electro Polishing Finish

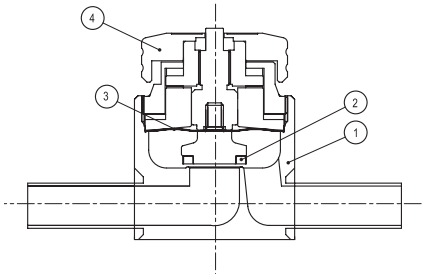

MATERIAL

NO.	NAME	MATERIAL
1	Body	316L Stainless Steel 316L Stainless Steel VAR 304 Stainless Steel
2	Disk	PCTFE
3	Diaphragm	316L Stainless Steel
4	Handle	Aluminum

ORDERING INFORMATION

S	12	HFLDV	–	TW	–	P1	–	PVM	–	X1	–	P
Material	Size	Product		Connection		Purge Port		Purge Port Connection		Option		Grade

MATERIAL		SIZE		CONNECTION	
S	316L Stainless Steel	12	3/4″	TW	Butt Weld(3/4″,1″,1-1/2″,2″)
D	316L Stainless Steel VAR	16	1″	VM	MFS Male(3/4″,1″)
4S	304 Stainless Steel	24	1 - 1/2″	VF	MFS Female(3/4″,1″)
		32	2″		

PURGE PORT LOCATION		PURGE PORT CONNECTIONS		GRADE	
P0	Outlet Side	PVM	1/4″ MFS Male	AP	AP Grade
P1	Inlet and Outlet			BLANK	BA Grade
P2	Inlet Side	PVF	1/4″ MFS Female	P	EP Grade
Blank	No Purge Port				

OUTSIDE DIMENSIONS		
	PORT SIZES	
	3/4″, 1″	1-1/2″, 2″
A	19	29.2
B	218	228

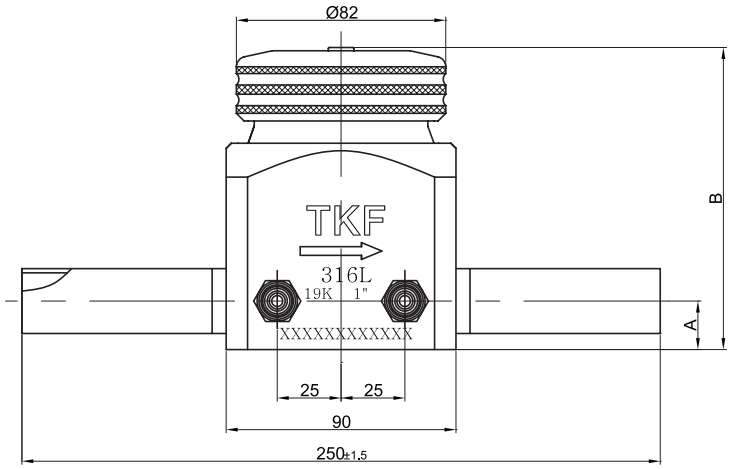

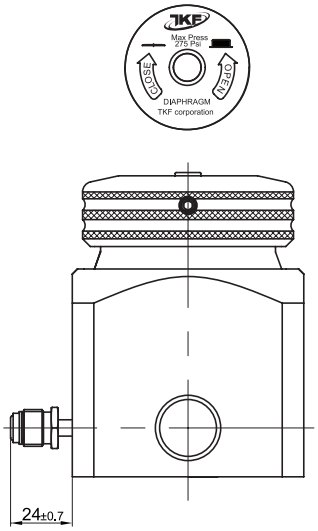

HIGH FLOW MANUAL BLOCK DIAPHRAGM VALVE

STD TYPE

FEATURES

- Internally threadless and springless
- Fully functional from a vacuum to 275psig
- Aerodynamic, fully swept flow passages
- Minimum particle generation and particle entrapment areas
- 100% Helium leak tested

MAJOR SPECIFICATIONS

Size	Main : 1/2″, 3/4″, 1″, 1-1/2″, 2″	Branch : 1/4″, 3/8″, 1/2″, 3/4″, 1″
Cv Value	2.8	
Max. Working Pressure (G.)	1.86MPa	
Max. Working Temp.	-10°C ~ 80°C	
Internal Leakage Allowance (He)	$1x10^{-10}$ Pa · m^3/s	
Test Pressure ≤ 1×10^{-2} Torr		
Holding Time ≥ 30 sec.		
External Leakage Allowance (He)	$1x10^{-10}$ Pa · m^3/s	
Test Pressure ≤ 1×10^{-2} Torr		
Holding Time ≥ 1 min.		
Particle Inspection (EP only) Pressure : 60~80psi N_2 Gas Sample Volume : 1CFM 0.1μm and Larger	No count	

PRODUCT GRADE

GRADE	AP	BA	EP
Inner Surface Roughness	Ry ≤ 25μm Cut off Length : 2.5mm Measuring Length : 12.5mm	Ry ≤ 3.0μm 10 μinch Ra(Avg.) Cut off Length : 0.8mm Measuring Length : 4mm	Ry ≤ 0.7μm 5 μinch Ra(Avg.) Cut off Length : 0.25mm Measuring Length : 1.25mm
Polishing	Machining Finish	Machining Finish	Electro Polishing Finish

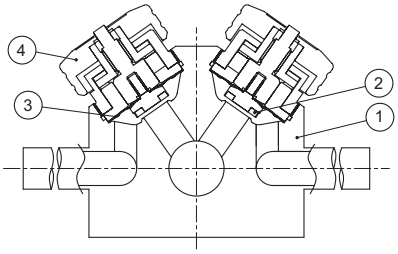

MATERIAL

NO.	NAME	MATERIAL
1	Body	316L Stainless Steel 316L Stainless Steel VAR 304 Stainless Steel
2	Disk	PCTFE
3	Diaphragm	316L Stainless Steel
4	Handle	Aluminum

ORDERING INFORMATION

S	16TW	HFBDV	–	8TW	–	HC	–	PVM	–	X1	–	P
Material	Main Inlet Port Size	Product		Branch Port Size And Type		Type of Duplex		Purge Port Connection		Option		Grade

MATERIAL		MAIN INLET PORT SIZE		BRANCH PORT SIZE AND TYPE		TYPE OF DUPLEX		PURGE PORT CONNECTIONS		GRADE	
S	316L Stainless Steel	8TW	1/2″ Tube	4TW	1/4″ Tube	HC	Horizontal Cross	BLANK	NO	AP	AP Grade
D	316L Stainless Steel VAR	12TW	3/4″ Tube	6TW	3/8″ Tube	HT	Horizontal Tee	PVM	1/4″ MFS Male	BLANK	BA Grade
4S	304 Stainless Steel	16TW	1″ Tube	8TW	1/2″ Tube	VT	Vertical Tee			P	EP Grade
		24TW	1-1/2″ Tube	12TW	3/4″ Tube						
		32TW	2″ Tube (Not available Vertical Tee)	16TW	1″ Tube						
				8VM	1/2″ MFS Male						
				8VF	1/2″ MFS Female						

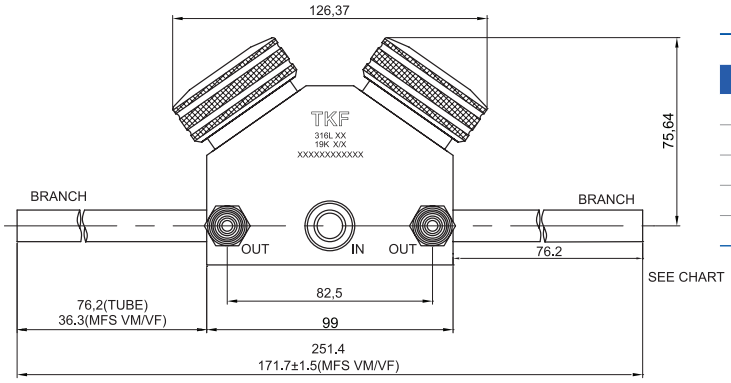

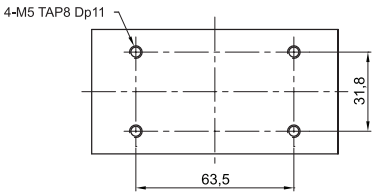

MAIN & BRANCH PORT LOCATION

Main Port Tube Dia.	Horizontal Cross(HC)	Horizontal Tee(HT)	Vertical Tee(VT)
1/2″	15.7	15.7	15.7
3/4″	15.7	15.7	15.7
1″	15.7	15.7	15.7
1-1/2″	31.7	31.7	31.7
2″	31.7	31.7	N/A

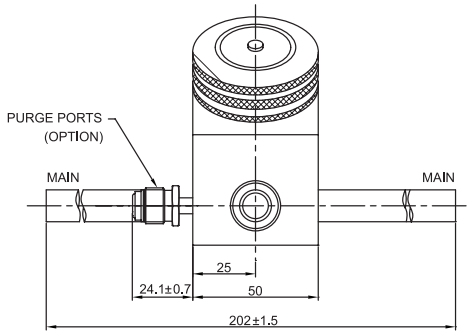

HORIZONTAL CROSS	HORIZONTAL TEE	VERTICAL TEE
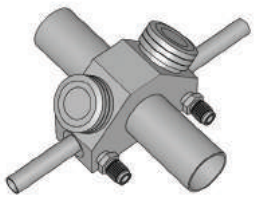	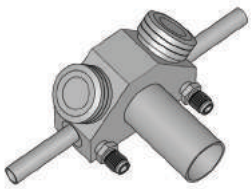	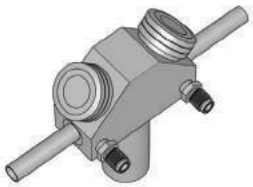

HIGH PRESSURE MANUAL DIAPHRAGM VALVE

STD TYPE

MAJOR SPECIFICATIONS

Size	1/4"
Cv Value	0.1
Orifice Size	2.3mm
Max. Working Pressure (G.)	23.5MPa
Max. Working Temp.	-10°C ~ 40°C
Internal Leakage Allowance (He) Test Pressure ≤ 1×10^{-2} Torr Holding Time ≥ 30 sec.	1×10^{-10} Pa · m^3/s
External Leakage Allowance (He) Test Pressure ≤ 1×10^{-2} Torr Holding Time ≥ 1 min.	1×10^{-10} Pa · m^3/s
Particle Inspection (EP only) Pressure : 60~80psi N_2 Gas Sample Volume : 1CFM 0.1μm and Larger	No count

PRODUCT GRADE

GRADE	AP	BA	EP
Inner Surface Roughness	Ry ≤ 25μm Cut off Length : 2.5mm Measuring Length : 12.5mm	Ry ≤ 3.0μm 10 μinch Ra(Avg.) Cut off Length : 0.8mm Measuring Length : 4mm	Ry ≤ 0.7μm 5 μinch Ra(Avg.) Cut off Length : 0.25mm Measuring Length : 1.25mm
Polishing	Machining Finish	Machining Finish	Electro Polishing Finish

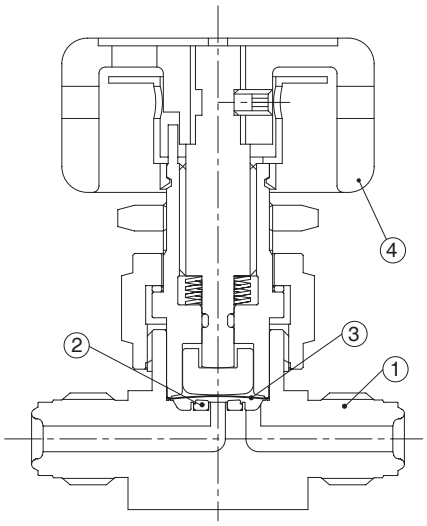

MATERIAL

NO.	NAME	MATERIAL
1	Body	316L Stainless Steel 316L Stainless Steel VAR 304 Stainless Steel
2	Seat	PCTFE
3	Diaphragm	Ni-Co Alloy
4	Handle	Aluminum

ORDERING INFORMATION

S	4	HDV	–	VM	–	X1	–	P
Material	Size	Product		Connection		Option		Grade

MATERIAL		SIZE		CONNECTION		GRADE	
S	316L Stainless Steel	4	1/4″	VM	MFS Male	AP	AP Grade
D	316L Stainless Steel VAR			VF	MFS Female	BLANK	BA Grade
4S	304 Stainless Steel			SW	Lok	P	EP Grade
				TW	Butt Weld		

MODEL	CONNECTION	A	B	C	D	E	F	G	H	I	J
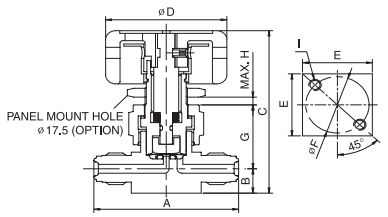	MFS Male	57	11	74	48	28	25.4	28.5	3.5	M5	
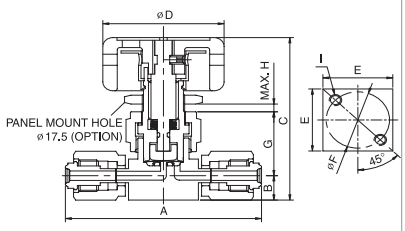	MFS Female	70.6	11	74	48	28	25.4	28.5	3.5	M5	
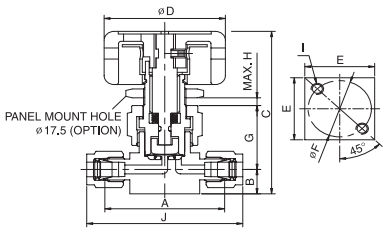	Lok	55	11	74	48	28	25.4	28.5	3.5	M5	69.3
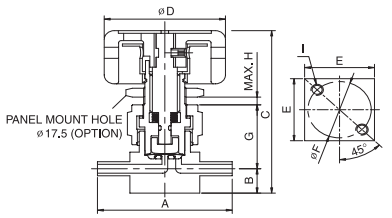	Butt Weld	135	11	74	48	28	25.4	28.5	3.5	M5	

HIGH PRESSURE MANUAL DIAPHRAGM VALVE

SPRING TYPE

FEATURES

- HPL series diaphragm valves require just one-quarter turn of The handle to actuate the valve from fully open to closed.
- Position indicator ring provides visual confirmation that the Valve is fully open or closed.
- Splined handle and actuator prevent handle slippage and Assure positive valve actuator.
- Various end connections are available (MFS Male, MFS Female, Lok)

MAJOR SPECIFICATIONS

Size	1/4"
Cv Value	0.3
Orifice Size	4.5mm
Max. Working Pressure (G.)	24.1MPa
Max. Working Temp.	-73°C ~ 80°C
Internal Leakage Allowance (He) Test Pressure ≤ 1×10^{-2} Torr Holding Time ≥ 30 sec.	$1x10^{-10}$ Pa · m^3/s
External Leakage Allowance (He) Test Pressure ≤ 1×10^{-2} Torr Holding Time ≥ 1 min.	$1x10^{-10}$ Pa · m^3/s
Particle Inspection (EP only) Pressure : 60~80psi N_2 Gas Sample Volume : 1CFM 0.1μm and Larger	No count

PRODUCT GRADE

GRADE	AP	BA	EP
Inner Surface Roughness	Ry ≤ 25μm Cut off Length : 2.5mm Measuring Length : 12.5mm	Ry ≤ 3.0μm 10 μinch Ra(Avg.) Cut off Length : 0.8mm Measuring Length : 4mm	Ry ≤ 0.7μm 5 μinch Ra(Avg.) Cut off Length : 0.25mm Measuring Length : 1.25mm
Polishing	Machining Finish	Machining Finish	Electro Polishing Finish

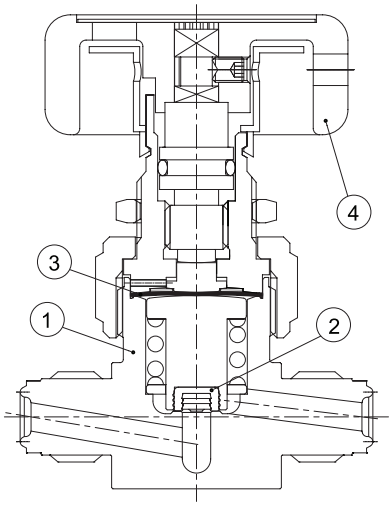

MATERIAL

NO.	NAME	MATERIAL
1	Body	316L Stainless Steel 316L Stainless Steel VAR
2	Seat	PCTFE / PFA
3	Diaphragm	Ni-Co Alloy
4	Handle	Aluminum

ORDERING INFORMATION

S	4	HPRN	–	VM	–	X1	–	P
Material	Size	Product		Connection		Option		Grade

MATERIAL		SIZE		HANDLE		CONNECTION		GRADE	
S	316L Stainless Steel	4	1/4″	HPR	Round Handle	VM	MFS Male	AP	AP Grade
D	316L Stainless Steel VAR			HPL	Lever Handle	VF	MFS Female	BLANK	BA Grade
						SW	Lok	P	EP Grade

ROUND HANDLE	CONNECTION	SIZE	A	B	C	D	E	F
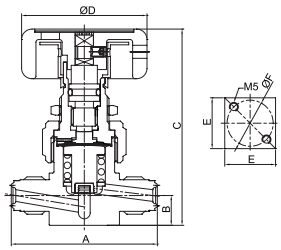	MFS Male	1/4″	58.4	11.4	76	48	26.9	25.4
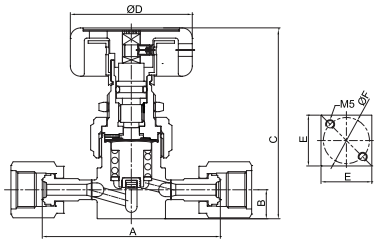	MFS Female	1/4″	70.1	11.4	76	48	26.9	25.4
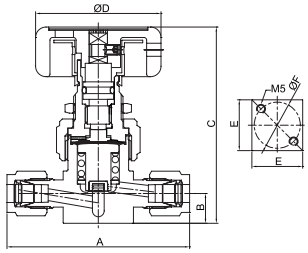	Lok	1/4″	68.2	11.4	76	48	26.9	25.4

HIGH PRESSURE MANUAL BLOCK DIAPHRAGM VALVE

STD TYPE

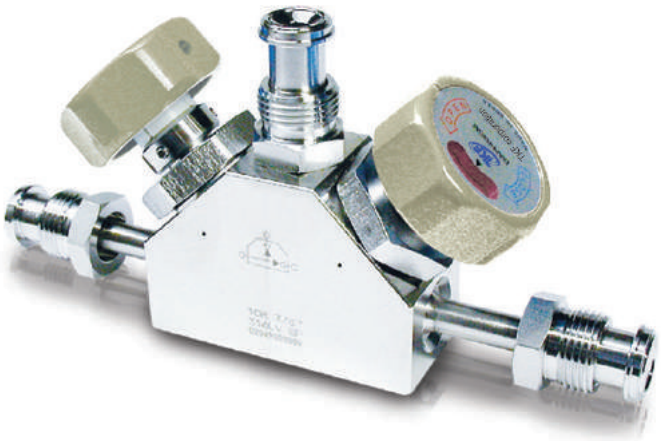

MAJOR SPECIFICATIONS

Size	1/4"
Cv Value	0.1
Orifice Size	2.3mm
Max. Working Pressure (G.)	23.5MPa
Max. Working Temp.	-10°C ~ 40°C
Internal Leakage Allowance (He) Test Pressure ≤ 1×10^{-2} Torr Holding Time ≥ 30 sec.	$1x10^{-10}$ Pa · m^3/s
External Leakage Allowance (He) Test Pressure ≤ 1×10^{-2} Torr Holding Time ≥ 1 min.	$1x10^{-10}$ Pa · m^3/s
Particle Inspection (EP only) Pressure : 60~80psi N_2 Gas Sample Volume : 1CFM 0.1μm and Larger	No count

PRODUCT GRADE

GRADE	AP	BA	EP
Inner Surface Roughness	Ry ≤ 25μm Cut off Length : 2.5mm Measuring Length : 12.5mm	Ry ≤ 3.0μm 10 μinch Ra(Avg.) Cut off Length : 0.8mm Measuring Length : 4mm	Ry ≤ 0.7μm 5 μinch Ra(Avg.) Cut off Length : 0.25mm Measuring Length : 1.25mm
Polishing	Machining Finish	Machining Finish	Electro Polishing Finish

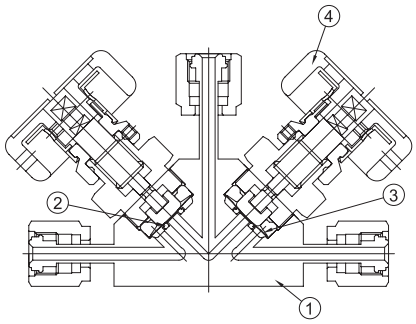

MATERIAL

NO.	NAME	MATERIAL
1	Body	316L Stainless Steel 316L Stainless Steel VAR
2	Seat	PCTFE
3	Diaphragm	Ni-Co Alloy
4	Handle	Aluminum

ORDERING INFORMATION

S	4	HBDV	–	VM	–	1T23	–	X1	–	P
Material	Size	Product		Connection		Flow		Option		Grade

MATERIAL		SIZE		CONNECTION		FLOW	GRADE	
S	316L Stainless Steel	4	1/4″	VF	MFS Female	1T25	AP	AP Grade
D	316L Stainless Steel VAR					5T12	BLANK	BA Grade
						1T23	P	EP Grade
						3T12		

MODEL	FLOW	MODEL	FLOW	MODEL	FLOW	MODEL	FLOW
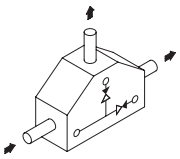	1T25	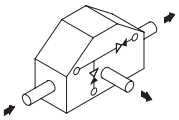	1T23	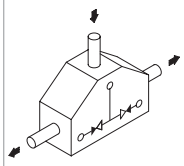	5T12	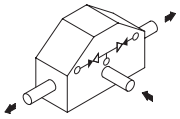	3T12

MODEL	FLOW	SIZE	A	B	C	D	E	F	G	H
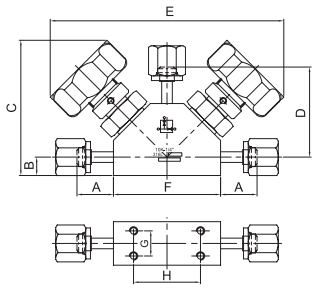	1T25	1/4″	21.8	11	74.4	53.8	126.7	64	15	40
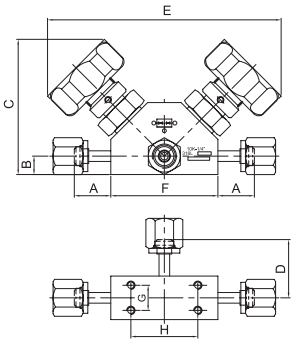	1T23	1/4″	21.8	11	74.4	34.8	126.7	64	15	40

HIGH PRESSURE MANUAL DIAPHRAGM VALVE

BRANCH TYPE

MAJOR SPECIFICATIONS

Size	1/4"
Cv Value	0.1
Orifice Size	2.3mm
Max. Working Pressure (G.)	23.5MPa
Max. Working Temp.	-10°C ~ 40°C
Internal Leakage Allowance (He)	$1x10^{-10}$ Pa · m^3/s
Test Pressure ≤ 1×10^{-2} Torr	
Holding Time ≥ 30 sec.	
External Leakage Allowance (He)	$1x10^{-10}$ Pa · m^3/s
Test Pressure ≤ 1×10^{-2} Torr	
Holding Time ≥ 1 min.	
Particle Inspection (EP only)	No count
Pressure : 60~80psi N_2 Gas	
Sample Volume : 1CFM	
0.1μm and Larger	

PRODUCT GRADE

GRADE	AP	BA	EP
Inner Surface Roughness	Ry ≤ 25μm Cut off Length : 2.5mm Measuring Length : 12.5mm	Ry ≤ 3.0μm 10 μinch Ra(Avg.) Cut off Length : 0.8mm Measuring Length : 4mm	Ry ≤ 0.7μm 5 μinch Ra(Avg.) Cut off Length : 0.25mm Measuring Length : 1.25mm
Polishing	Machining Finish	Machining Finish	Electro Polishing Finish

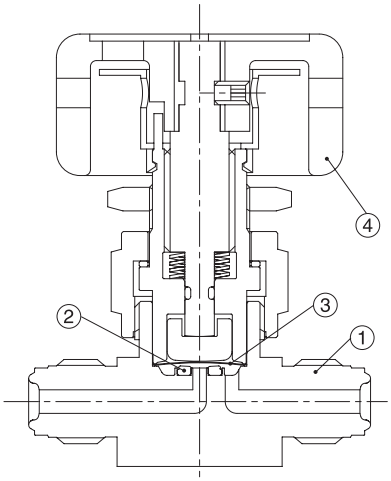

MATERIAL

NO.	NAME	MATERIAL
1	Body	316L Stainless Steel 316L Stainless Steel VAR 304 Stainless Steel
2	Seat	PCTFE
3	Diaphragm	Ni-Co Alloy
4	Handle	Aluminum

ORDERING INFORMATION

S	4	HDV3	–	VM	–	12T3	–	X1	–	P
Material	Size	Product		Connection		Flow		Option		Grade

MATERIAL		SIZE		CONNECTION		FLOW		GRADE	
S	316L Stainless Steel	4	1/4″	VM	MFS Male	12T3	1 2 3	AP	AP Grade
D	316L Stainless Steel VAR			VF	MFS Female			BLANK	BA Grade
4S	304 Stainless Steel			SW	Lok	13T2	1 2 3	P	EP Grade
				TW	Butt Weld				

MODEL	CONNECTION	A	B	C	D	E	F	G	H
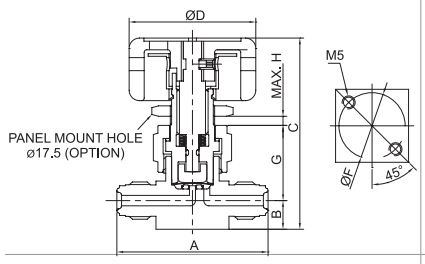	MFS Male	57	11	73	48		25.4	28.5	3.5
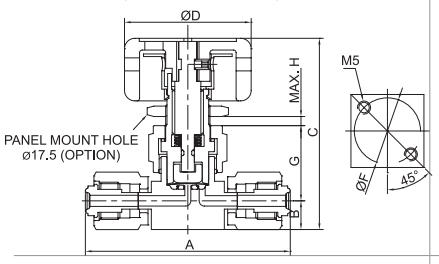	MFS Female	70.6	11	73	48		25.4	28.5	3.5
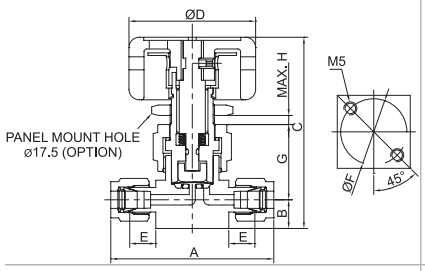	Lok	69.3	11	73	48	13.5	25.4	28.5	3.5
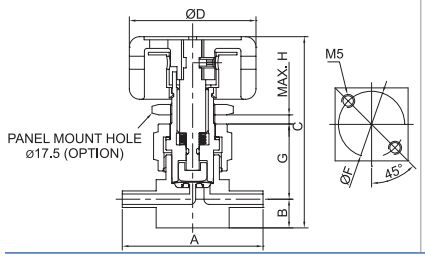	Butt Weld	135	11	73	48		25.4	28.5	3.5

HIGH PRESSURE PNEUMATIC DIAPHRAGM VALVE

STD TYPE

FEATURES

- Highly resistant to corrosion using nickel-cobalt alloy diaphragm
- Minimal particle generation
- Minimal contributions of Moisture, Oxygen and Hydrocarbon
- Permanently heat code laser marked; material traceable to original mill certificate of test
- Increased operation speed using aluminum piston

MAJOR SPECIFICATIONS

Size	1/4"	1/2"
Cv Value	0.28	0.7
Orifice Size	4.4mm	8mm
Max. Working Pressure (G.)	20.5MPa	
Operating Pressure (G.)	0.5 ~ 0.7MPa	
Max. Working Temp.	PCTFE : -10°C ~ 40°C	
Internal Leakage Allowance (He)	$1x10^{-10}$ Pa · m^3/s	
Test Pressure ≤ 1×10^{-2} Torr		
Holding Time ≥ 15 sec.		
External Leakage Allowance (He)	$1x10^{-10}$ Pa · m^3/s	
Test Pressure ≤ 1×10^{-2} Torr		
Holding Time ≥ 1 min.		
Particle Inspection (EP only)	No count	
Pressure : 60~80psi N_2 Gas		
Sample Volume : 1CFM		
0.1μm and Larger		

PRODUCT GRADE

GRADE	AP	BA	EP
Inner Surface Roughness	Ry ≤ 25μm Cut off Length : 2.5mm Measuring Length : 12.5mm	Ry ≤ 3.0μm 10 μinch Ra(Avg.) Cut off Length : 0.8mm Measuring Length : 4mm	Ry ≤ 0.7μm 5 μinch Ra(Avg.) Cut off Length : 0.25mm Measuring Length : 1.25mm
Polishing	Machining Finish	Machining Finish	Electro Polishing Finish

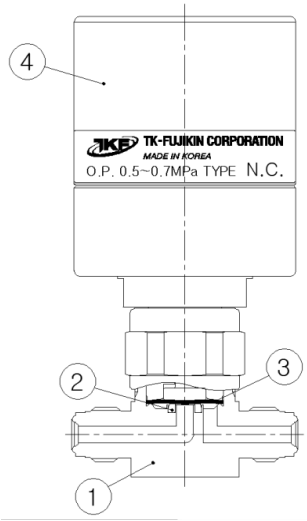

MATERIAL

NO.	NAME	MATERIAL
1	Body	316L Stainless steel 316L Stainless steel VAR 304 Stainless Steel
2	Seat	PCTFE
3	Diaphragm	Ni-Co Alloy
4	Actuator	Aluminum

ORDERING INFORMATION

S	4	HPDVN	–	VM	–	C	–	X1	–	P
Body Material	Size	Product		Connection Type		Operation Method		Option		Grade

MATERIAL		SIZE		CONNECTION		OPTION		GRADE	
S	316L Stainless Steel	4	1/4″	VM	MFS Male	C	Normally Close	AP	AP Grade
D	316L Stainless Steel VAR	8	1/2"	VF	MFS Female			BLANK	BA Grade
4S	304 Stainless Steel							P	EP Grade

MODEL	CONNECTION	SIZE	A	B	C	D	E	F	G
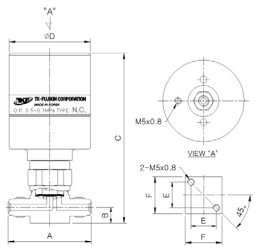	MFS Male	1/4"	58.7	11.1	119.8	57.5	18	28	
		1/2"	82.5	18.3	134.1	57.5	27	44.3 x 38	
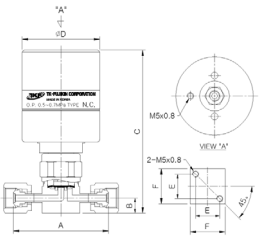	MFS Female	1/4"	76.2	11.1	119.8	57.5	18	28	
		1/2"	114.3	18.3	134.1	57.5	27	44.3 x 38	

HIGH PRESSURE MANUAL DIAPHRAGM VALVE

STD TYPE

FEATURES

- Highly resistant to corrosion using nickel-cobalt alloy diaphragm
- Minimal particle generation
- Permanently heat code laser marked; material traceable to original mill certificate of test
- Electropolished, D.I. water cleaned, assembled, tested and packed in a certified clean room

MAJOR SPECIFICATIONS

Size	1/4"	1/2"
Cv Value	0.29	0.7
Orifice Size	4.4mm	7mm
Max. Working Pressure (G.)	20.6MPa	
Max. Working Temp.	PCTFE : -40°C ~ 71°C	PCTFE : -40°C ~ 65°C
Internal Leakage Allowance (He)	$1x10^{-10}$ Pa · m^3/s	
Test Pressure ≤ $1×10^{-2}$ Torr		
Holding Time ≥ 30 sec.		
External Leakage Allowance (He)	$1x10^{-10}$ Pa · m^3/s	
Test Pressure ≤ $1×10^{-2}$ Torr		
Holding Time ≥ 1 min.		
Particle Inspection (EP only)	No count	
Pressure : 60~80psi N_2 Gas		
Sample Volume : 1CFM		
0.1μm and Larger		

PRODUCT GRADE

GRADE	AP	BA	EP
Inner Surface Roughness	Ry ≤ 25μm Cut off Length : 2.5mm Measuring Length : 12.5mm	Ry ≤ 3.0μm 10 μinch Ra(Avg.) Cut off Length : 0.8mm Measuring Length : 4mm	Ry ≤ 0.7μm 5 μinch Ra(Avg.) Cut off Length : 0.25mm Measuring Length : 1.25mm
Polishing	Machining Finish	Machining Finish	Electro Polishing Finish

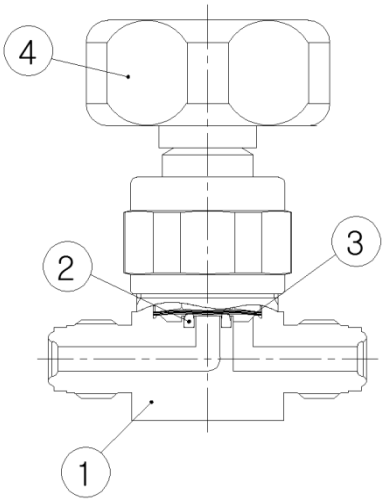

MATERIAL

NO.	NAME	MATERIAL
1	Body	316L Stainless Steel 316L Stainless Steel VAR 304 Stainless Steel
2	Seat	PCTFE
3	Diaphragm	Ni-Co Alloy
4	Handle	Aluminum

ORDERING INFORMATION

S	4	HDVN	–	VM	–	X1	–	P
Body Material	Size	Product		Connection Type		Option		Grade

MATERIAL		SIZE		CONNECTION		GRADE	
S	316L Stainless Steel	4	1/4"	VM	MFS Male	AP	AP Grade
D	316L Stainless Steel VAR	8	1/2"	VF	MFS Female	BLANK	BA Grade
4S	304 Stainless Steel					P	EP Grade

MODEL	CONNECTION	SIZE	A	B	C	D	E	F	G
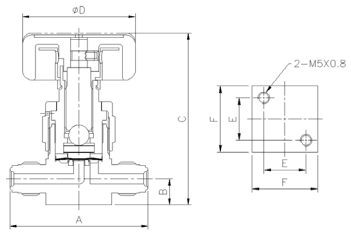	MFS Male	1/4"	58.7	11.1	72.8	48	18	28	
		1/2"	82.5	18.3	87	48	27	44.3 X 38	
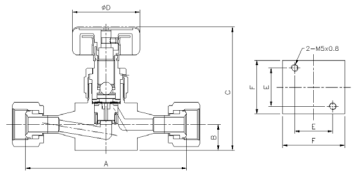	MFS Female	1/4"	76.2	11.1	72.8	48	18	28	
		1/2"	114.3	18.3	87	48	27	44.3 X 38	

LOW PRESSURE MANUAL BELLOWS VALVE

STD TYPE

FEATURES

- Minimize the dead space
- Installation can be made either panel-mount or bottom-mount
- Handle with open/close indicator is standardized

MAJOR SPECIFICATIONS

Size	1/4"	3/8", 1/2"	3/4"
Cv Value	0.36	1.1	2.6
Orifice Size	4.5mm	8mm	12mm
Max. Working Pressure (G.)	1MPa		
Max. Working Temp.	PCTFE : -10°C ~ 80°C / PI : -10°C ~ 150°C		
Internal Leakage Allowance (He)	$4x10^{-10}$ Pa · m^3/s		
Test Pressure ≤ $1×10^{-2}$ Torr			
Holding Time ≥ 30 sec.			
External Leakage Allowance (He)	$4x10^{-10}$ Pa · m^3/s		
Test Pressure ≤ $1×10^{-2}$ Torr			
Holding Time ≥ 1 min.			
Particle Inspection (EP only)	No count		
Pressure : 60~80psi N_2 Gas			
Sample Volume : 1CFM			
0.1μm and Larger			

PRODUCT GRADE

GRADE	AP	BA	EP
Inner Surface Roughness	Ry ≤ 25μm Cut off Length : 2.5mm Measuring Length : 12.5mm	Ry ≤ 3.0μm 10 μinch Ra(Avg.) Cut off Length : 0.8mm Measuring Length : 4mm	Ry ≤ 0.7μm 5 μinch Ra(Avg.) Cut off Length : 0.25mm Measuring Length : 1.25mm
Polishing	Machining Finish	Machining Finish	Electro Polishing Finish

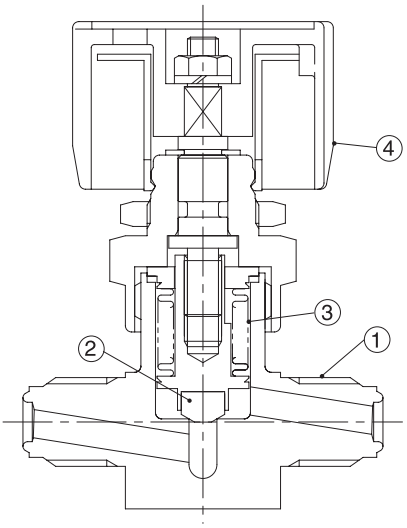

MATERIAL

NO.	NAME	MATERIAL
1	Body	316L Stainless Steel 316L Stainless Steel VAR 304 Stainless Steel
2	Disk	PCTFE / PI
3	Bellows	316L Stainless Steel
4	Handle	1/4″ ~ 1/2″ : HI-100, 3/4″ : Aluminum

ORDERING INFORMATION

S	4	BV	–	VM	–	X1	–	P
Material	Size	Product		Connection		Option		Grade

MATERIAL		SIZE		CONNECTION		OPTION		GRADE	
S	316L Stainless Steel	4	1/4″	VM	MFS Male	X259	PI Disk	AP	AP Grade
D	316L Stainless Steel VAR	6	3/8″	VF	MFS Female			BLANK	BA Grade
4S	304 Stainless Steel	8	1/2″	SW	Lok			P	EP Grade
		12	3/4″	TW	Butt Weld				

MODEL	CONNECTION	SIZE	A	B	C	D	E	F	G	H	J	L
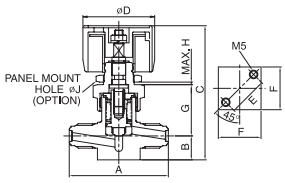	MFS Male	1/4″	58	14	79	45	23	25	30	2	18.5	
		3/8″	60	16	85	45	23	25	36.5	2	18.5	
		1/2″	60	16	85	45	23	25	36.5	2	18.5	
		3/4″	125	22	124	65	32	33	58	6	24	
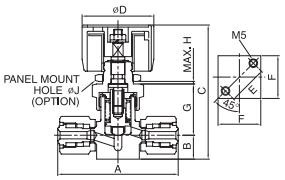	MFS Female	1/4″	70.5	14	79	45	23	25	30	2	18.5	
		3/8″	90	14	85	45	23	25	36.5	2	18.5	
		1/2″	90	14	85	45	23	25	36.5	2	18.5	
		3/4″	115	22	124	65	32	33	58	6	24	
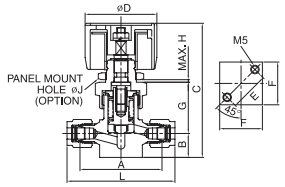	Lok	1/4″	50	14	79	45	23	25	30	2	18.5	64
		3/8″	63	14	85	45	23	25	36.5	2	18.5	78
		1/2″	63	14	85	45	23	25	36.5	2	18.5	83.5
		3/4″	80	22	124	65	32	33	58	6	24	101
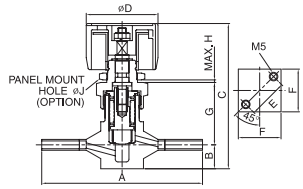	Butt Weld	1/4″	150	14	85	45	23	25	36.5	2	18.5	
		3/8″	150	14	85	45	23	25	36.5	2	18.5	
		1/2″	150	14	85	45	23	25	36.5	2	18.5	
		3/4″	158	22	124	65	32	33	58	6	24	

LOW PRESSURE PNEUMATIC BELLOWS VALVE

STD TYPE

FEATURES

- Reduced inner capacity
- Electropolished, D.I. water cleaned, assembled, tested and packaged in a certified clean room
- Minimal contributions of Moisture, Oxygen and Hydrocarbon
- Permanently heat code laser marked; material traceable to original mill certificate of test

MAJOR SPECIFICATIONS

Size	1/4"	3/8", 1/2"
Cv Value	0.36	1.1
Orifice Size	4.5mm	8mm
Max. Working Pressure (G.)	1MPa	
Operating Pressure (G.)	0.4 ~ 0.6MPa	
Max. Working Temp.	-10°C ~ 80°C	
Internal Leakage Allowance (He) Test Pressure ≤ 1×10^{-2} Torr Holding Time ≥ 15 sec.	4×10^{-10} Pa · m^3/s	
External Leakage Allowance (He) Test Pressure ≤ 1×10^{-2} Torr Holding Time ≥ 1 min.	4×10^{-10} Pa · m^3/s	
Particle Inspection (EP only) Pressure : 60~80psi N_2 Gas Sample Volume : 1CFM 0.1μm and Larger	No count	

PRODUCT GRADE

GRADE	AP	BA	EP
Inner Surface Roughness	Ry ≤ 25μm Cut off Length : 2.5mm Measuring Length : 12.5mm	Ry ≤ 3.0μm 10 μinch Ra(Avg.) Cut off Length : 0.8mm Measuring Length : 4mm	Ry ≤ 0.7μm 5 μinch Ra(Avg.) Cut off Length : 0.25mm Measuring Length : 1.25mm
Polishing	Machining Finish	Machining Finish	Electro Polishing Finish

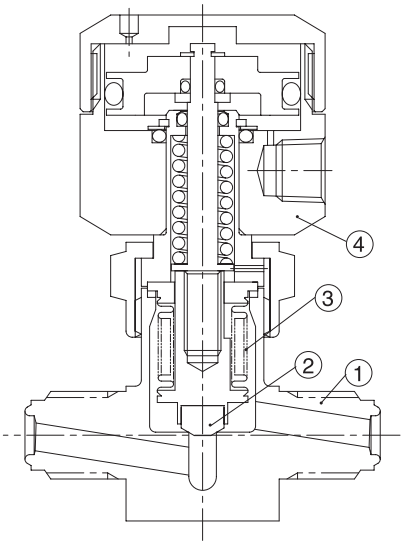

MATERIAL

NO.	NAME	MATERIAL
1	Body	316L Stainless Steel 316L Stainless Steel VAR 304 Stainless Steel
2	Disk	PCTFE
3	Bellows	316L Stainless Steel
4	Actuator	Aluminum

ORDERING INFORMATION

S	4	PBV	–	VM	–	C	–	X1	–	P
Material	Size	Product		Connection		Operation Method		Option		Grade

MATERIAL		SIZE		CONNECTION		OPERATION METHOD		GRADE	
S	316L Stainless Steel	4	1/4″	VM	MFS Male	C	Normally Close	AP	AP Grade
D	316L Stainless Steel VAR	6	3/8″	VF	MFS Female	O	Normally Open	BLANK	BA Grade
4S	304 Stainless Steel	8	1/2″	SW	Lok			P	EP Grade
				TW	Butt Weld				

MODEL	CONNECTION	SIZE	A	B	C	D	E	F	H
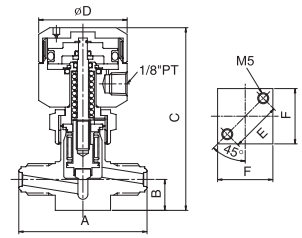	MFS Male	1/4″	58	14	82.6	40	23	25	
		3/8″	60	16	88.7	40.6	23	25	
		1/2″	60	16	88.7	40.6	23	25	
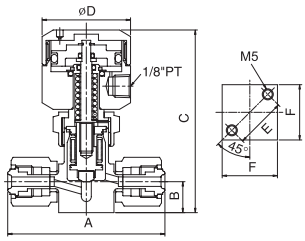	MFS Female	1/4″	70.5	14	82.6	40	23	25	
		3/8″	90	14	86.7	40.6	23	25	
		1/2″	90	14	86.7	40.6	23	25	
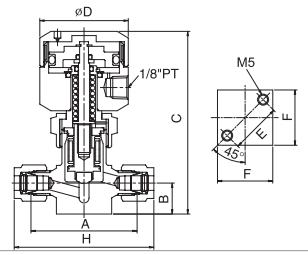	Lok	1/4″	50	14	82.6	40	23	25	64
		3/8″	63	14	86.7	40.6	23	25	78
		1/2″	63	14	86.7	40.6	23	25	83.5
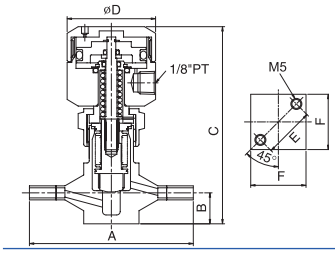	Butt Weld	1/4″	150	14	89.1	40	23	25	
		3/8″	150	14	86.7	40.6	23	25	
		1/2″	150	14	86.7	40.6	23	25	

LOW PRESSURE MANUAL BELLOWS METERING VALVE

FLOW CONTROL TYPE

FEATURES

- Reduced inner capacity
- Precise Micrometer Handle
- Precisely processed Stem Assembly: No backlash enables control of even a very small flow
- Metal Gasket (standard feature): Improves heat resistance

MAJOR SPECIFICATIONS

Size	1/4"(4BMVS)	1/4"(4BMVM)
Cv Value	0.02	0.3
Orifice Size	1.4mm	4.5mm
Max. Working Pressure (G.)	1MPa	
Max. Working Temp.	-10°C ~ 150°C	
Internal Leakage Allowance	-	
External Leakage Allowance (He) **Test Pressure ≤ 1×10^{-2} Torr** **Holding Time ≥ 1 min.**	1×10^{-10} Pa · m^3/s	
Particle Inspection (EP only) **Pressure : 60~80psi N_2 Gas** **Sample Volume : 1CFM** **0.1μm and Larger**	No count	

PRODUCT GRADE

GRADE	AP	BA	EP
Inner Surface Roughness	Ry ≤ 25μm Cut off Length : 2.5mm Measuring Length : 12.5mm	Ry ≤ 3.0μm 10 μinch Ra(Avg.) Cut off Length : 0.8mm Measuring Length : 4mm	Ry ≤ 0.7μm 5 μinch Ra(Avg.) Cut off Length : 0.25mm Measuring Length : 1.25mm
Polishing	Machining Finish	Machining Finish	Electro Polishing Finish

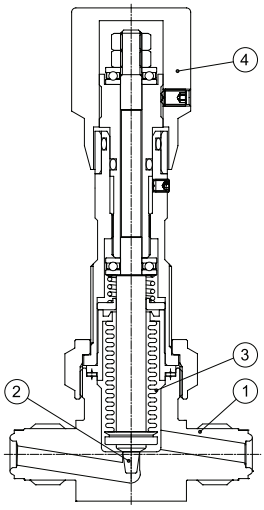

MATERIAL

NO.	NAME	MATERIAL
1	Body	316L Stainless Steel 316L Stainless Steel VAR 304 Stainless Steel
2	Stem	316L Stainless Steel
3	Bellows	316L Stainless Steel
4	Handle	Aluminum

ORDERING INFORMATION

S	4	BMV	S	—	VM	—	X1	—	P
Body Material	Connection Size	Product	Orifice		Connection		Option		Grade

MATERIAL		SIZE		ORIFICE		CONNECTION		GRADE	
S	316L Stainless Steel	4	1/4″	S	1.4mm	VM	MFS Male	AP	AP Grade
D	316L Stainless Steel VAR			M	4.0mm	VF	MFS Female	BLANK	BA Grade
4S	304 Stainless Steel							P	EP Grade

MODEL	SIZE	TYPE	A	B	C	D	E	F	H	J	K
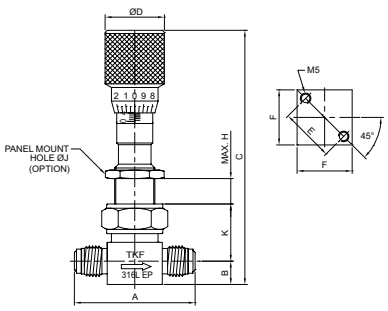	1/4″	4BMVS	57	11	120	28	25.4	26	12	19.5	27
		4BMVM	57	11	120	28	25.4	26	12	19.5	27
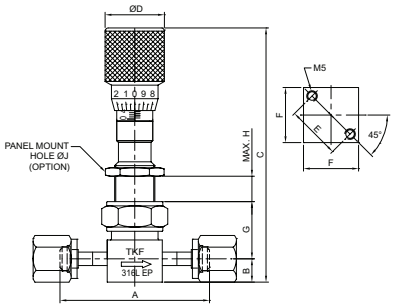	1/4″	4BMVS	70.6	11	120	28	25.4	26	12	19.5	27
		4BMVM	70.6	11	120	28	25.4	26	12	19.5	27

LOW PRESSURE MANUAL BELLOWS VALVE

FORGED A TYPE

FEATURES

- Forged body reduced the total weight
- The valve seat is designed to produce less dust and gas residue
- Handle colors available on request

MAJOR SPECIFICATIONS

Size	15A	1"	20A	25A
Cv Value	2.9	4.1	4.1	6.9
Orifice Size	15mm	19mm	19mm	25mm
Max. Working Pressure (G.)	1MPa			
Max. Working Temp.	-10°C ~ 80°C			
Internal Leakage Allowance (He) **Test Pressure ≤ 1×10^{-2} Torr** **Holding Time ≥ 30 sec.**	1×10^{-6} Pa · m^3/s			
External Leakage Allowance (He) **Test Pressure ≤ 1×10^{-2} Torr** **Holding Time ≥ 1 min.**	1×10^{-6} Pa · m^3/s			
Particle Inspection (EP only) **Pressure : 60~80psi N_2 Gas** **Sample Volume : 1CFM** **0.1μm and Larger**	No count			

PRODUCT GRADE

GRADE	AP	BA	EP
Inner Surface Roughness	Ry ≤ 25μm Cut off Length : 2.5mm Measuring Length : 12.5mm	Ry ≤ 3.0μm 10 μinch Ra(Avg.) Cut off Length : 0.8mm Measuring Length : 4mm	Ry ≤ 0.7μm 5 μinch Ra(Avg.) Cut off Length : 0.25mm Measuring Length : 1.25mm
Polishing	Machining Finish	Machining Finish	Electro Polishing Finish

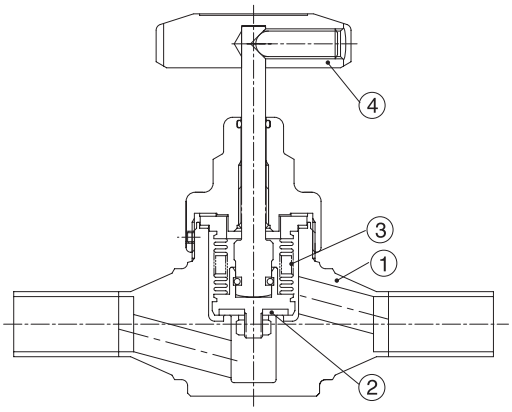

MATERIAL

NO.	NAME	MATERIAL
1	Body	316L Stainless Steel 316L Stainless Steel VAR 304 Stainless Steel
2	Disk	PTFE
3	Bellows	316L Stainless Steel
4	Handle	Aluminum

ORDERING INFORMATION

S	15	ABV	–	TW	–	X1	–	P
Material	Size	Product		Connection		Option		Grade

MATERIAL		SIZE		CONNECTION		GRADE	
S	316L Stainless Steel	15	15A	TW	Butt Weld	AP	AP Grade
D	316L Stainless Steel VAR	T16	1″	FL	Flange(JIS 10K)	BLANK	BA Grade
4S	304 Stainless Steel	20	20A			P	EP Grade
		25	25A				

MODEL	CONNECTION	SIZE	A	B	C	D	E	G	L
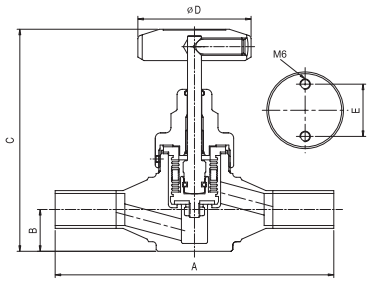	Butt Weld	15A	190	24	131	65	30		
		1″	200	28	143	65	35		
		20A	200	28	143	65	35		
		25A	210	33	161	79	40		

MODEL	CONNECTION	SIZE	A	B	C	D	E	F	G	N-H
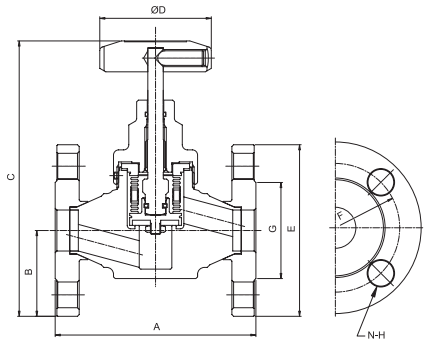	Flange	15A	108	47.5	155	65	95	70	51	4-Ø15
		1″	117	50	165	65	100	75	56	4-Ø15
		20A	117	50	165	65	100	75	56	4-Ø15
		25A	127	62.5	191	79	125	90	67	4-Ø19

LOW PRESSURE PNEUMATIC BELLOWS VALVE

FORGED A TYPE

FEATURES

- Forged body reduced the total weight
- The valve seat is designed to produce less dust and gas residue

MAJOR SPECIFICATIONS

Size	15A	1"	20A	25A
Cv Value	2.9	4.1	4.1	6.9
Orifice Size	15mm	19mm	19mm	25mm
Max. Working Pressure (G.)	1MPa			
Operating Pressure (G.)	0.4 ~ 0.7MPa			
Max. Working Temp.	-10°C ~ 80°C			
Internal Leakage Allowance (He) Test Pressure ≤ 1×10^{-2} Torr Holding Time ≥ 15 sec.	1×10^{-6} Pa · m^3/s			
External Leakage Allowance (He) Test Pressure ≤ 1×10^{-2} Torr Holding Time ≥ 1 min.	1×10^{-6} Pa · m^3/s			
Particle Inspection (EP only) Pressure : 60~80psi N_2 Gas Sample Volume : 1CFM 0.1μm and Larger	No count			

PRODUCT GRADE

GRADE	AP	BA	EP
Inner Surface Roughness	Ry ≤ 25μm Cut off Length : 2.5mm Measuring Length : 12.5mm	Ry ≤ 3.0μm 10 μinch Ra(Avg.) Cut off Length : 0.8mm Measuring Length : 4mm	Ry ≤ 0.7μm 5 μinch Ra(Avg.) Cut off Length : 0.25mm Measuring Length : 1.25mm
Polishing	Machining Finish	Machining Finish	Electro Polishing Finish

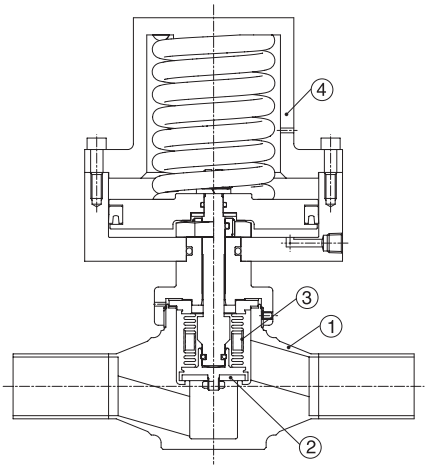

MATERIAL

NO.	NAME	MATERIAL
1	Body	316L Stainless Steel 316L Stainless Steel VAR 304 Stainless Steel
2	Disk	PCTFE
3	Bellows	316L Stainless Steel
4	Actuator	Aluminum

ORDERING INFORMATION

S	15	APBV	–	TW	–	C	–	X1	–	P
Material	Size	Product		Connection		Operation Method		Option		Grade

MATERIAL		SIZE		CONNECTION		OPERATION METHOD		GRADE	
S	316L Stainless Steel	15	15A	TW	Butt Weld	C	Normally Close	AP	AP Grade
D	316L Stainless Steel VAR	T16	1″	FL	Flange (JIS 10K)	O	Normally Open	BLANK	BA Grade
4S	304 Stainless Steel	20	20A					P	EP Grade
		25	25A						

MODEL	CONNECTION	SIZE	A	B	C	D	E
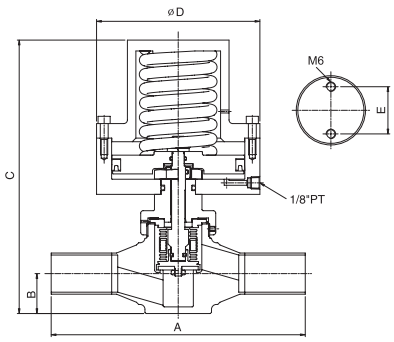	Butt Weld	15A	190	24	204	110	30
		1″	200	28	215	135	35
		20A	200	28	215	135	35
		25A	210	33	226	135	40

MODEL	CONNECTION	SIZE	A	B	C	D	E	F	G	N-H
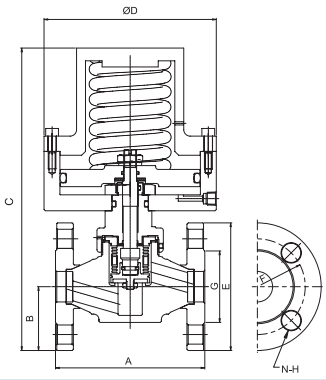	Flange	15A	108	47.5	228	110	95	70	51	4-Ø15
		1″	117	50	237	135	100	75	56	4-Ø15
		20A	117	50	237	135	100	75	56	4-Ø15
		25A	127	62.5	256	135	125	90	67	4-Ø19

LOW PRESSURE MANUAL BELLOWS VALVE (32A ~ 50A)

CASTING A TYPE

MAJOR SPECIFICATIONS

Size	32A	40A	2"	50A
Cv Value	16	16	16	21
Orifice Size	40mm	40mm	40mm	45mm
Max. Working Pressure (G.)	1MPa			
Max. Working Temp.	-10°C ~ 80°C			
Internal Leakage Allowance (He) **Test Pressure ≤ 1×10^{-2} Torr** **Holding Time ≥ 30 sec.**	1×10^{-6} Pa · m^3/s			
External Leakage Allowance (He) **Test Pressure ≤ 1×10^{-2} Torr** **Holding Time ≥ 1 min.**	1×10^{-6} Pa · m^3/s			
Particle Inspection (EP only) **Pressure : 60~80psi N_2 Gas** **Sample Volume : 1CFM** **0.1μm and Larger**	No count			

PRODUCT GRADE

GRADE	AP	BA	EP
Inner Surface Roughness	Ry ≤ 25μm Cut off Length : 2.5mm Measuring Length : 12.5mm	Ry ≤ 3.0μm 10 μinch Ra(Avg.) Cut off Length : 0.8mm Measuring Length : 4mm	Ry ≤ 0.7μm 5 μinch Ra(Avg.) Cut off Length : 0.25mm Measuring Length : 1.25mm
Polishing	Machining Finish	Machining Finish	Electro Polishing Finish

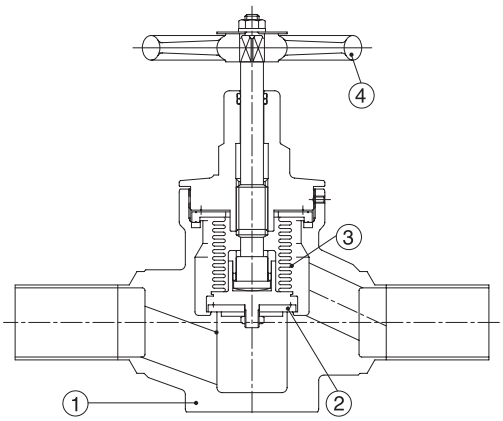

MATERIAL

NO.	NAME	MATERIAL
1	Body	SCS16 SCS13
2	Disk	PTFE
3	Bellows	316L Stainless Steel
4	Handle	SCS13

ORDERING INFORMATION

S	32	ABV	–	TW	–	X1	–	P
Material	Size	Product		Connection		Option		Grade

MATERIAL		SIZE		CONNECTION		GRADE	
S	SCS16	32	32A	TW	Butt Weld	AP	AP Grade
4S	SCS13	40	40A	FL	Flange(JIS 10K)	BLANK	BA Grade
		T32	2″			P	EP Grade
		50	50A				

MODEL	CONNECTION	SIZE	A	B	C	D
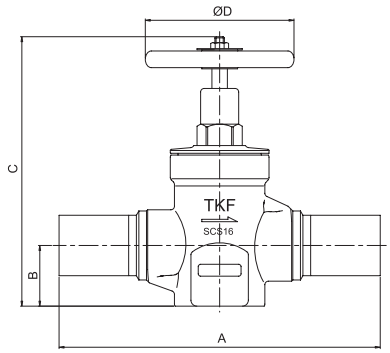	Butt Weld	32A	270	51	239	125
		40A	270	51	239	125
		2″	270	51	239	125
		50A	295	61	295	160

MODEL	CONNECTION	SIZE	A	B	C	D	E	F	G	N-H
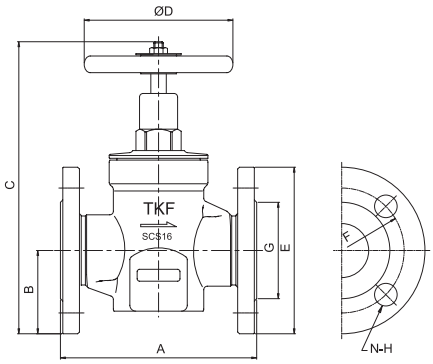	Flange	32A	165	67.5	256.0	125	135	100	76	4-Ø19
		40A	165	70.0	258.0	125	140	105	81	4-Ø19
		2″	165	70.0	258.0	125	140	105	81	4-Ø19
		50A	203	77.5	311.5	160	155	120	96	4-Ø19

LOW PRESSURE MANUAL BELLOWS VALVE (65A ~ 500A)

CASTING A TYPE

MAJOR SPECIFICATIONS

Size	65A	80A	100A	125A	150A	200A	250A	300A	350A	400A	450A	500A
Cv Value	81	132	200	302	434	772	1200	1600	2000	2650	3100	3400
Orifice Size	65	80	100	124	148	200	250	300	350	400	450	490
Max. Working Pressure (G.)	1MPa											
Max. Working Temp.	-10°C ~ 80°C											
Internal Leakage Allowance (He) **Test Pressure ≤ 1×10^{-2} Torr** **Holding Time ≥ 30 sec.**	1×10^{-6} Pa · m^3/s											
External Leakage Allowance (He) **Test Pressure ≤ 1×10^{-2} Torr** **Holding Time ≥ 1 min.**	1×10^{-6} Pa · m^3/s											
Particle Inspection (EP only) **Pressure : 60~80psi N_2 Gas** **Sample Volume : 1CFM** **0.1μm and Larger**	No count											

PRODUCT GRADE

GRADE	AP	BA	EP
Inner Surface Roughness	Ry ≤ 25μm Cut off Length : 2.5mm Measuring Length : 12.5mm	Ry ≤ 3.0μm 10 μinch Ra(Avg.) Cut off Length : 0.8mm Measuring Length : 4mm	Ry ≤ 0.7μm 5 μinch Ra(Avg.) Cut off Length : 0.25mm Measuring Length : 1.25mm
Polishing	Machining Finish	Machining Finish	Electro Polishing Finish

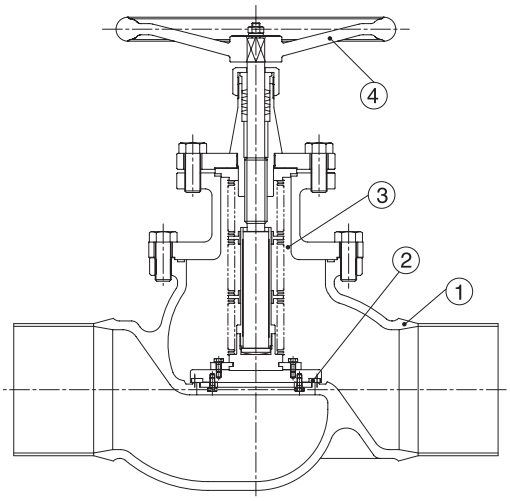

MATERIAL

NO.	NAME	MATERIAL
1	Body	SCS16 SCS13
2	Disk	PTFE
3	Bellows	316L Stainless Steel
4	Handle	SCS13

ORDERING INFORMATION

S	65	ABV	–	TW	–	X1	–	P
Material	Size	Product		Connection		Option		Grade

MATERIAL		SIZE		CONNECTION		GRADE	
S	SCS16	65	65A	TW	Butt Weld	AP	AP Grade
4S	SCS13	80	80A	FL	Flange(JIS 10K)	BLANK	BA Grade
		100	100A			P	EP Grade
		125	125A				
		150	150A				
		200	200A				
		250	250A				
		300	300A				
		350	350A				
		400	400A				
		450	450A				
		500	500A				

MODEL	CONNECTION	SIZE	A	B	C	D
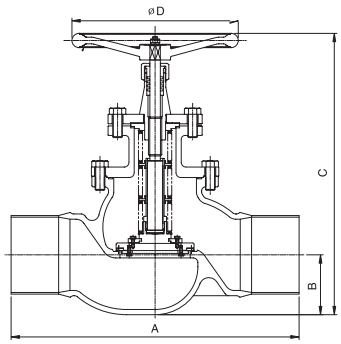	Butt Weld	65A	416	68	347	160
		80A	441	80	381	200
		100A	492	94	476	200
		125A	556	111	616	300
		150A	606	126	632	300
		200A	795	157	847	400
		250A	1022	190	1085	450
		300A	1100	216	1228	500
		350A	1187	241	1286	710
		400A	1314	268	1318	710
		450A	1440	305	1454	800

MODEL	CONNECTION	SIZE	A	B	C	D
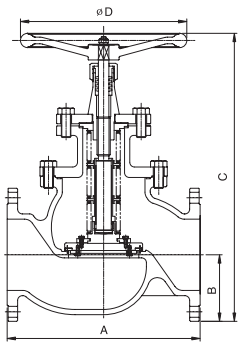	Flange	65A	216	87.5	367	160
		80A	241	92.5	394	200
		100A	292	105	487	200
		125A	356	125	630	300
		150A	406	140	646	300
		200A	495	165	855	400
		250A	622	200	1095	450
		300A	698	222.5	1235	500
		350A	787	245	1290	710
		400A	914	280	1330	710
		450A	1040	310	1579	800
		500A	1040	338	1630	800

NOTE : When order for 50A Size, part no. must be 50 ABV-TW-X388 / 50ABV-FL-X388

LOW PRESSURE PNEUMATIC BELLOWS VALVE (32A ~ 50A)

CASTING A TYPE

MAJOR SPECIFICATIONS

Size	32A	40A	2"	50A
Cv Value	16	16	16	21
Orifice Size	40mm	40mm	40mm	45mm
Max. Working Pressure (G.)	1MPa			
Operating Pressure (G.)	0.4 ~ 0.7MPa			
Max. Working Temp.	-10°C ~ 80°C			
Internal Leakage Allowance (He) **Test Pressure ≤ 1×10^{-2} Torr** **Holding Time ≥ 15 sec.**	1×10^{-6} Pa · m^3/s			
External Leakage Allowance (He) **Test Pressure ≤ 1×10^{-2} Torr** **Holding Time ≥ 1 min.**	1×10^{-6} Pa · m^3/s			
Particle Inspection (EP only) **Pressure : 60~80psi N_2 Gas** **Sample Volume : 1CFM** **0.1μm and Larger**	No count			

PRODUCT GRADE

GRADE	AP	BA	EP
Inner Surface Roughness	Ry ≤ 25μm Cut off Length : 2.5mm Measuring Length : 12.5mm	Ry ≤ 3.0μm 10 μinch Ra(Avg.) Cut off Length : 0.8mm Measuring Length : 4mm	Ry ≤ 0.7μm 5 μinch Ra(Avg.) Cut off Length : 0.25mm Measuring Length : 1.25mm
Polishing	Machining Finish	Machining Finish	Electro Polishing Finish

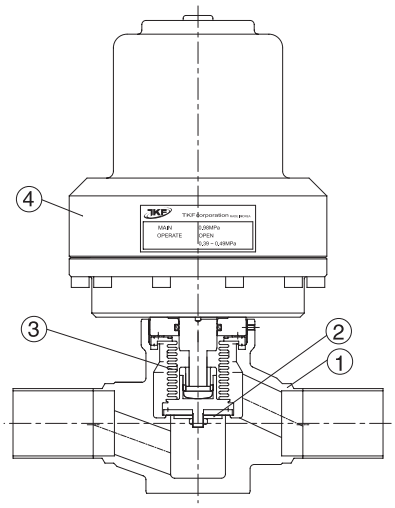

MATERIAL

NO.	NAME	MATERIAL
1	Body	SCS16 SCS13
2	Disk	PTFE
3	Bellows	316L Stainless Steel
4	Actuator	Aluminum

ORDERING INFORMATION

S	40	APBV	–	TW	–	C	–	X1	–	P
Material	Size	Product		Connection		Operation Method		Option		Grade

MATERIAL		SIZE		CONNECTION		OPERATION METHOD		GRADE	
S	SCS16	32	32A	TW	Butt Weld	C	Normally Close	AP	AP Grade
4S	SCS13	40	40A	FL	Flange (JIS 10K)	O	Normally Open	BLANK	BA Grade
		T32	2″					P	EP Grade
		50	50A						

MODEL	CONNECTION	SIZE	A	B	C	D
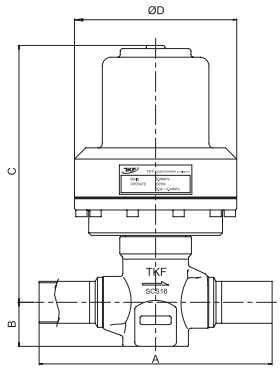	Butt Weld	32A	270	51	309	188
		40A	270	51	309	188
		2″	270	51	309	188
		50A	295	57	350	188

MODEL	CONNECTION	SIZE	A	B	C	D	E	F	G	N-H
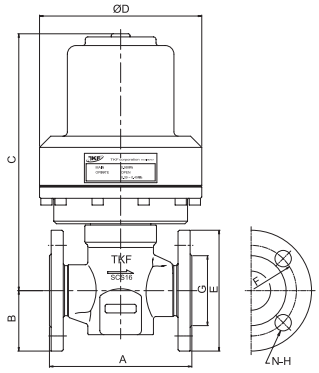	Flange	32A	165	67.5	309	188	135	100	76	4-Ø19
		40A	165	70.0	309	188	140	105	81	4-Ø19
		2″	165	70.0	309	188	140	105	81	4-Ø19
		50A	203	77.5	350	188	155	120	96	4-Ø19

LOW PRESSURE FULL FLOW MANUAL BELLOWS VALVE

Y TYPE

FEATURES

- Achieved large Cv value
- Inner surface has uniform surface roughness
- The valve seat is designed to produce less dust and gas residue
- Cast steel valves suitable for works demanding strength, shock resistance, elongation and heat resistance(40A~200A)

MAJOR SPECIFICATIONS

Size	1/2"	3/4"	1"
Cv Value	17	23	38
Max. Working Pressure (G.)	1MPa		
Max. Working Temp.	-10°C ~ 80°C		
Internal Leakage Allowance (He) Test Pressure ≤ 1×10^{-2} Torr Holding Time ≥ 30 sec.	4×10^{-10} Pa · m^3/s		1×10^{-6} Pa · m^3/s
External Leakage Allowance (He) Test Pressure ≤ 1×10^{-2} Torr Holding Time ≥ 1 min.	4×10^{-10} Pa · m^3/s		1×10^{-6} Pa · m^3/s
Particle Inspection (EP only) Pressure : 60~80psi N_2 Gas Sample Volume : 1CFM 0.1μm and Larger	No count		No count

PRODUCT GRADE

GRADE	AP	BA	EP
Inner Surface Roughness	Ry ≤ 25μm Cut off Length : 2.5mm Measuring Length : 12.5mm	Ry ≤ 3.0μm 10 μinch Ra(Avg.) Cut off Length : 0.8mm Measuring Length : 4mm	Ry ≤ 0.7μm 5 μinch Ra(Avg.) Cut off Length : 0.25mm Measuring Length : 1.25mm
Polishing	Machining Finish	Machining Finish	Electro Polishing Finish

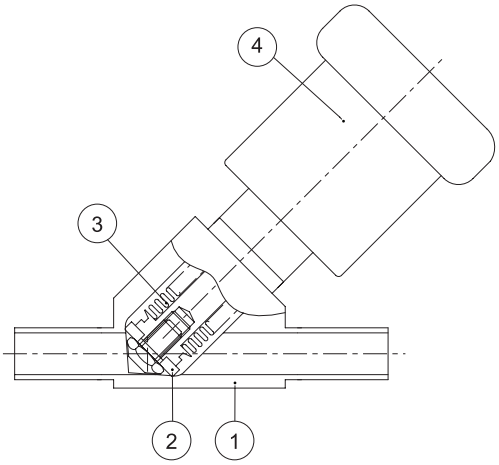

MATERIAL

NO.	NAME	MATERIAL
1	Body	316L Stainless Steel 316L Stainless Steel VAR 304 Stainless Steel
2	Disk	PCTFE / PTFE
3	Bellows	316L Stainless Steel
4	Handle	Aluminum

ORDERING INFORMATION

S	T8	YBV	–	TW	–	X1	–	P
Material	Size	Product		Connection		Option		Grade

MATERIAL		SIZE				CONNECTION		GRADE	
S	316L Stainless Steel	T8	1/2″	80	80A	TW	Butt Weld	AP	AP Grade
D	316L Stainless Steel VAR	T12	3/4″	100	100A			BLANK	BA Grade
4S	304 Stainless Stainless Steel	T16	1″	125	125A			P	EP Grade
S	SCS16(40A~200A)	40	40A	150	150A				
4S	SCS13(40A~200A)	50	50A	200	200A				
		65	65A						

MODEL	CONNECTION	SIZE	A	B	C	D
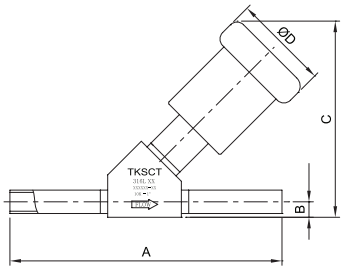	Butt Weld	1/2″	180	8.4	109	52
		3/4″	200	11.5	127	59
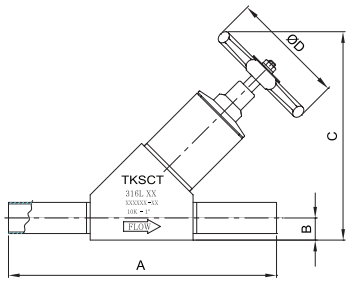	Butt Weld	1″	257	17.7	187	65
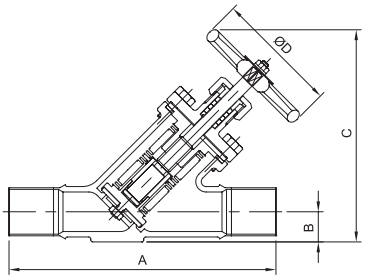	Butt Weld	40A	270	30.5	214.6	125
		50A	340	38.5	251.8	160
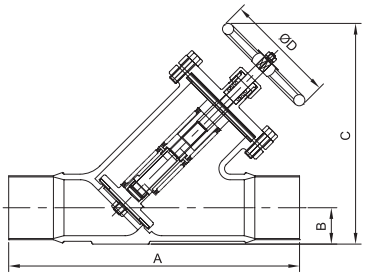	Butt Weld	65A	380	46	315.4	200
		80A	420	54	348.4	200
		100A	520	65	413.1	250
		125A	620	77.5	487.7	300
		150A	720	91	543.1	300
		200A	900	114	676.1	400

LOW PRESSURE FULL / HALF FLOW PNEUMATIC BELLOWS VALVE

YPBV TYPE

FEATURES

- Achieved large Cv value
- Inner surface has uniform surface roughness
- The valve seat is designed to produce less dust and gas residue

MAJOR SPECIFICATIONS

	FULL FLOW		HALF FLOW
Size	**1/2″**	**3/4″**	**1″**
Cv Value	17	20	36
Max. Working Pressure (G.)	1MPa		
Operating Pressure (G.)	1/2″~1″ : 0.4 ~ 0.7MPa		
Max. Working Temp.	-10°C ~ 80°C		
Internal Leakage Allowance (He) **Test Pressure ≤ 1×10^{-2} Torr** **Holding Time ≥ 30 sec.**	1×10^{-6} Pa · m^3/s		
External Leakage Allowance (He) **Test Pressure ≤ 1×10^{-2} Torr** **Holding Time ≥ 1 min.**	1×10^{-6} Pa · m^3/s		
Particle Inspection (EP only) **Pressure : 60~80psi N_2 Gas** **Sample Volume : 1CFM** **0.1μm and Larger**	No count		

PRODUCT GRADE

GRADE	AP	BA	EP
Inner Surface Roughness	Ry ≤ 25μm Cut off Length : 2.5mm Measuring Length : 12.5mm	Ry ≤ 3.0μm 10 μinch Ra(Avg.) Cut off Length : 0.8mm Measuring Length : 4mm	Ry ≤ 0.7μm 5 μinch Ra(Avg.) Cut off Length : 0.25mm Measuring Length : 1.25mm
Polishing	Machining Finish	Machining Finish	Electro Polishing Finish

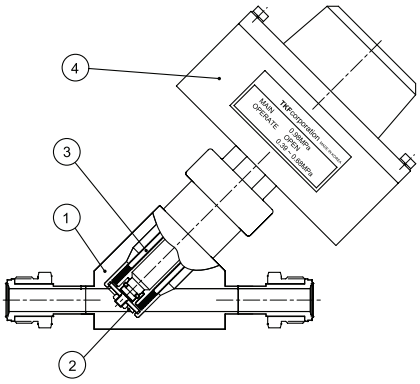

MATERIAL

NO.	NAME	MATERIAL
1	Body	316L Stainless Steel 316L Stainless Steel VAR 304 Stainless Steel
2	Disk	PCTFE / PTFE
3	Bellows	316L Stainless Steel
4	Actuator	Aluminum

ORDERING INFORMATION

S	4	YPBV	–	TW	–	C	–	X1	–	P
Material	Size	Product		Connection		Operation Method		Option		Grade

MATERIAL		SIZE		PRODUCT		CONNECTION		OPERATION METHOD		GRADE	
S	316L Stainless Steel	T8	1/2″	YPBVK	Full Flow	VM	MFS Male	C	Normally Close	AP	AP Grade
D	316L Stainless Steel VAR	T12	3/4″	YPHBVK	Half Flow	VF	MFS Female	O	Normally Open	BLANK	BA Grade
4S	304 Stainless Stainless Steel	T16	1″			TW	Butt Weld			P	EP Grade

MODEL

BODY SIZE : 1/2″, 3/4″, 1″

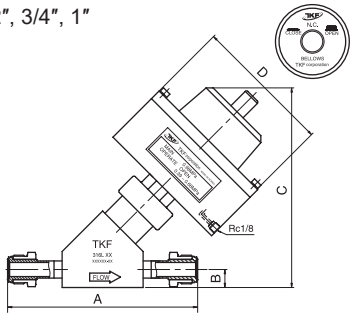

Full Flow

CONNECTION	SIZE	A	B	C	D
VM	1/2″	162	15	175	120
VM	3/4″	211.2	20	222	155
TW	3/4″	260	20	222	155
VM	1″	214	17.7	230	169
TW	1″	270	17.7	230	169

Half Flow

CONNECTION	SIZE	A	B	C	D
VM	1/2″	162	15	175	120
VM	3/4″	211.2	20	228	155
TW	3/4″	260	20	228	155
VM	1″	214	17.7	228	169
TW	1″	270	17.7	228	169

HIGH FLOW MANUAL BELLOWS VALVE

STD TYPE

FEATURES

- Achieved large Cv value
- The valve seat is designed to produce less dust and gas residue.
- Electropolished, D.I. water cleaned, assembled, tested and packaged in a certified clean room

MAJOR SPECIFICATIONS

Size	1/2"	3/4"
Cv Value	2.0	2.8
Orifice Size	10.2mm	12.0mm
Max. Working Pressure (G.)	1MPa	
Max. Working Temp.	-10°C ~ 80°C	
Internal Leakage Allowance (He) **Test Pressure ≤ 1×10^{-2} Torr** **Holding Time ≥ 30 sec.**	5×10^{-10} Pa · m^3/s	
External Leakage Allowance (He) **Test Pressure ≤ 1×10^{-2} Torr** **Holding Time ≥ 1 min.**	5×10^{-10} Pa · m^3/s	
Particle Inspection (EP only) **Pressure : 60~80psi N_2 Gas** **Sample Volume : 1CFM** **0.1μm and Larger**	No count	

PRODUCT GRADE

GRADE	AP	BA	EP
Inner Surface Roughness	Ry ≤ 25μm Cut off Length : 2.5mm Measuring Length : 12.5mm	Ry ≤ 3.0μm 10 μinch Ra(Avg.) Cut off Length : 0.8mm Measuring Length : 4mm	Ry ≤ 0.7μm 5 μinch Ra(Avg.) Cut off Length : 0.25mm Measuring Length : 1.25mm
Polishing	Machining Finish	Machining Finish	Electro Polishing Finish

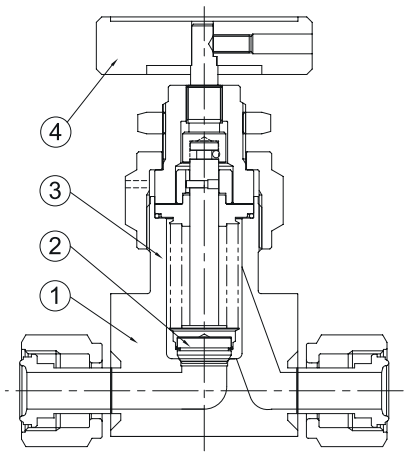

MATERIAL

NO.	NAME	MATERIAL
1	Body	316L Stainless Steel 316L Stainless Steel VAR 304 Stainless Steel
2	Disk	PCTFE
3	Bellows	316L SS
4	Handle	Aluminum

ORDERING INFORMATION

S	8	HFBV	—	VF	—	X1	—	P
Body Material	Size	Product		Connection Type		Option		Grade

MATERIAL		SIZE		CONNECTION		GRADE	
S	316L Stainless Steel	8	1/2"	VM	MFS Male	AP	AP Grade
D	316L Stainless Steel VAR	12	3/4"	VF	MFS Female	BLANK	BA Grade
4S	304 Stainless Steel					P	EP Grade

MODEL	CONNECTION	SIZE	A	B	C	D	E	F	G
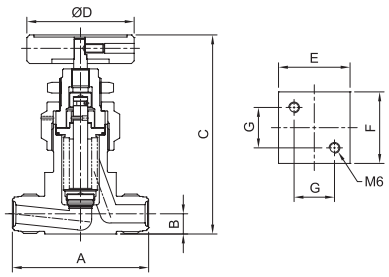	MFS Male	1/2"	76.2	11.1	111.9	60	40	34	22.6
		3/4"	85	22	119.5	60	40	40	22.6
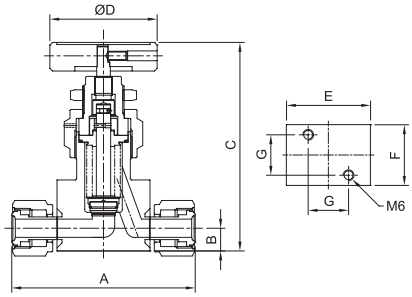	MFS Female	1/2"	102.6	12.7	117.2	60	52	34	22.6
			149	22	118.5	60	47	34	22.6

HIGH FLOW PNEUMATIC BELLOWS VALVE

STD TYPE

FEATURES

- Achieved large Cv value
- The valve seat is designed to produce less dust and gas residue.
- Electropolished, D.I. water cleaned, assembled, tested and packaged in a certified clean room

MAJOR SPECIFICATIONS

Size	1/2"	3/4"
Cv Value	2.0	2.8
Orifice Size	10.2mm	12.0mm
Max. Working Pressure (G.)	1MPa	
Operating Pressure (G.)	0.34 ~ 0.59MPa	
Max. Working Temp.	-10°C ~ 80°C	
Internal Leakage Allowance (He) Test Pressure ≤ 1×10^{-2} Torr Holding Time ≥ 30 sec.	5×10^{-10} Pa · m^3/s	
External Leakage Allowance (He) Test Pressure ≤ 1×10^{-2} Torr Holding Time ≥ 1 min.	5×10^{-10} Pa · m^3/s	
Particle Inspection (EP only) Pressure : 60~80psi N_2 Gas Sample Volume : 1CFM 0.1μm and Larger	No count	

PRODUCT GRADE

GRADE	AP	BA	EP
Inner Surface Roughness	Ry ≤ 25μm Cut off Length : 2.5mm Measuring Length : 12.5mm	Ry ≤ 3.0μm 10 μinch Ra(Avg.) Cut off Length : 0.8mm Measuring Length : 4mm	Ry ≤ 0.7μm 5 μinch Ra(Avg.) Cut off Length : 0.25mm Measuring Length : 1.25mm
Polishing	Machining Finish	Machining Finish	Electro Polishing Finish

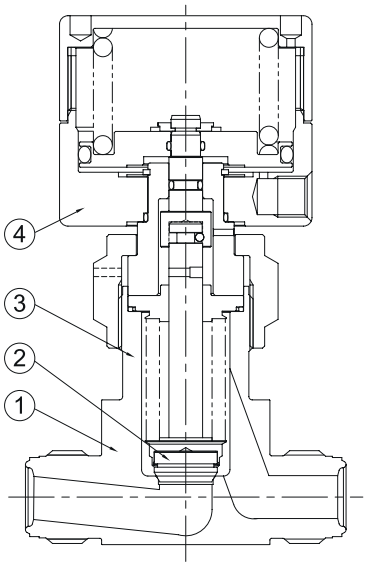

MATERIAL

NO.	NAME	MATERIAL
1	Body	316L Stainless Steel 316L Stainless Steel VAR 304 Stainless Steel
2	Disk	PCTFE
3	Bellows	316L SS
4	Actuator	Aluminum

ORDERING INFORMATION

S	8	HFPBV	–	VM	–	C	–	X1	–	P
Body Material	Size	Product		Connection Type		Operation Method		Option		Grade

MATERIAL		SIZE		CONNECTION		OPTION		GRADE	
S	316L Stainless Steel	8	1/2"	VM	MFS Male	C	Normally Close	AP	AP Grade
D	316L Stainless Steel VAR	12	3/4"	VF	MFS Female	O	Normally Open	BLANK	BA Grade
4S	304 Stainless Steel							P	EP Grade

MODEL	CONNECTION	SIZE	A	B	C	D	E	F	G
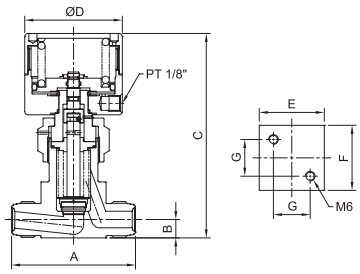	MFS Male	1/2"	76.2	11.1	125.7	60	40	34	22.6
		3/4"	85	22	133.4	60	40	40	22.6
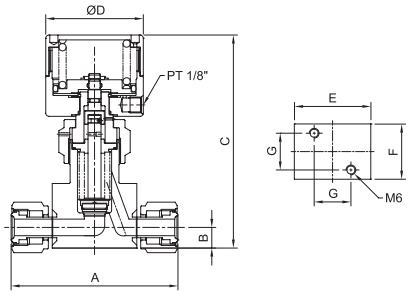	MFS Female	1/2"	102.6	12.7	131	60	52	34	22.6
		3/4"	149	22	132.4	60	47	34	22.6

CHECK VALVE

STD TYPE

FEATURES

- Using SUS316L as a material , corrosion resistance is improved
- All-welded design provides reliable containment of system fluid
- Conserves panel space
- Noise free operations
- Cleanroom assembled and packaged

MAJOR SPECIFICATIONS

Size	1/4"	3/8", 1/2"
Cv Value	0.55	0.7
Max. Working Pressure (G.)	20.6MPa	
Nominal Reseal Pressure (G.)	27.6KPa	
Nominal Cracking Pressure (G.)	13.8KPa	
Max. Working Temp.	-10°C ~ 80°C	
External Leakage Allowance (He) **Test Pressure ≤ 1×10^{-2} Torr** **Holding Time ≥ 1 min.**	1×10^{-10} Pa · m^3/s	
Particle Inspection (EP only) **Pressure : 60~80psi N_2 Gas** **Sample Volume : 1CFM** **0.1μm and Larger**	No count	

PRODUCT GRADE

GRADE	AP	BA	EP
Inner Surface Roughness	Ry ≤ 25μm Cut off Length : 2.5mm Measuring Length : 12.5mm	Ry ≤ 3.0μm 10 μinch Ra(Avg.) Cut off Length : 0.8mm Measuring Length : 4mm	Ry ≤ 0.7μm 5 μinch Ra(Avg.) Cut off Length : 0.25mm Measuring Length : 1.25mm
Polishing	Machining Finish	Machining Finish	Electro Polishing Finish

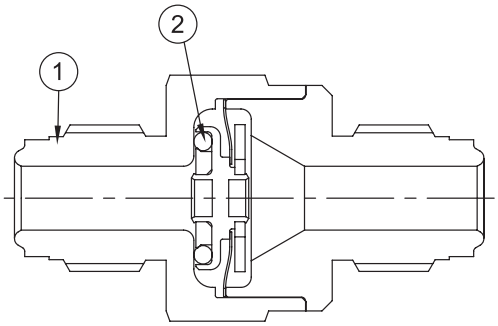

MATERIAL

NO.	NAME	MATERIAL
1	Body	316L Stainless Steel 316L Stainless Steel VAR
2	Seal Ring	FKM / Neoprene /
3	Spring	Hastelloy C-22

ORDERING INFORMATION

S	4	CHV1	–	VM	–	X1	–	P
Material	Size	Product		Connection		Option		Grade

MATERIAL		SIZE		CONNECTION		GRADE	
S	316L Stainless Steel	4	1/4″	VM	MFS Male	AP	AP Grade
D	316L Stainless Steel VAR	8	1/2″			BLANK	BA Grade
						P	EP Grade

MODEL	CONNECTION	SIZE	A	B
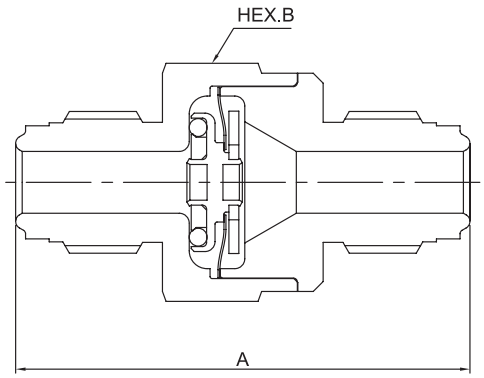	MFS Male	1/4″	45.8	22
		1/2″	52.3	27

HIGH PRESSURE CYLINDER VALVE

DIAPHRAGM SEAL TYPE

FEATURES

- Ultra high purity gas available
- Minimized dead space
- Springless type
- Handwheel smoothly control
- Secondary sealing type
- Outlet connection changeable
  (CGA, CGA DISS, DIN, JIS Standard)

MAJOR SPECIFICATIONS

Cv Value	0.35
Orifice Size	4mm
Max. Working Pressure (G.)	20.6MPa
Max. Working Temp.	-40°C ~ 70°C
Internal Leakage Allowance (He) Test Pressure ≤ 1×10^{-2} Torr Holding Time ≥ 30 sec.	1×10^{-10} Pa · m^3/s
External Leakage Allowance (He) Test Pressure ≤ 1×10^{-2} Torr Holding Time ≥ 1 min.	1×10^{-10} Pa · m^3/s
Particle Inspection Pressure : 60~80psi N_2 Gas Sample Volume : 1CFM 0.1μm and Larger	No count
Inner Surface Roughness	Ry ≤ 3.0μm 10 μinch Ra(Avg.) Cut off Length : 0.8mm Measuring Length : 4mm

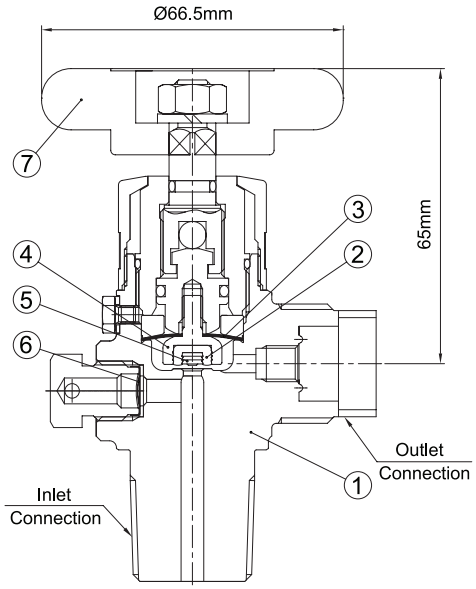

MATERIAL

NO.	NAME	MATERIAL
1	Body	316L Stainless Steel 316L Stainless Steel VAR 304 Stainless Steel
2	Seat	PCTFE
3	Diaphragm	Ni-Co Alloy
4	Seat Holder	316L Stainless Steel
5	Seat Pin	316L Stainless Steel
6	Burst Disc	Nickel
7	Handle	Aluminum

ORDERING INFORMATION

S	CLV4	–	12N	–	724	–	K	–	X1
Material	Product		Inlet Connection		Outlet Connection		Standard		Option

MATERIAL		INLET CONNECTION		OUTLET CONNECTION		STANDARD	
S	316L Stainless Steel	8N	1/2″-14NGT Thread	632	CGA632	K	KS Standard
D	316L Stainless Steel VAR	12N	3/4″-14NGT Thread	640	CGA640	G	CGA Standard
4S	304 Stainless Steel	16N	1″-11 1/2NGT Thread	724	CGA724		
		W28	W28-14	W22	W22-14		
			⋮ (Customer Option)		⋮ (Customer Option)		

SAFETY DEVICES

▪ Burst Disc

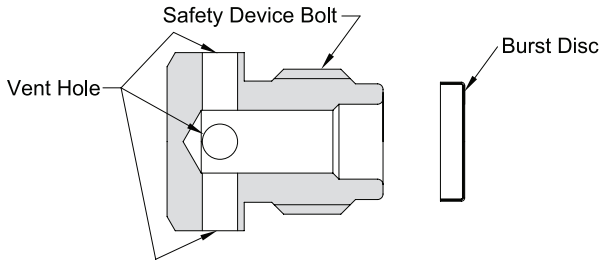

▪ Fusible Alloy (option)

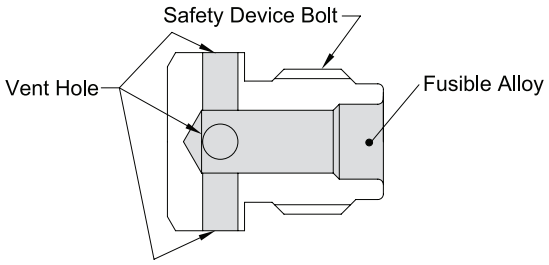

OUTLET CAP DESIGNS

A TYPE	B TYPE	C TYPE	D TYPE	E TYPE
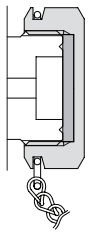	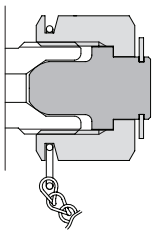	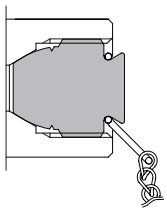	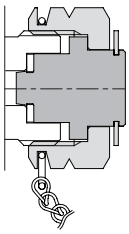	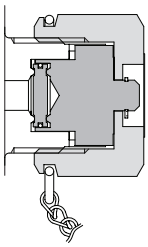

A TYPE : CGA 170, 180, 320, 330, 660, 670
B TYPE : CGA 290, 326, 346, 350, 540
C TYPE : CGA 296, 510, 580, 590
D TYPE : CGA 678, 679
E TYPE : CGA DISS SERIES (632 ~ 642, 712 ~ 728)

HIGH PRESSURE MANUAL METERING VALVE

FLOW CONTROL TYPE

FEATURES

- Precisely tapered valve stem accurately controls flow
- 316L forged body construction
- Panel or in-line mounting
- IN-line pattens
- Valve stem thread not in contact with process fluid
- Optional handle

MAJOR SPECIFICATIONS

Size	1/4"
Cv Value	0.03
Stem Taper	3°
Tums to Open	9+/-1
Orifice Size	1.35mm
Max. Working Pressure (G.)	6.89MPa
Max. Working Temp.	-10°C ~ 150°C
External Leakage Allowance (He) Test Pressure ≤ 1×10^{-2} Torr Holding Time ≥ 1 min.	1×10^{-10} Pa · m^3/s
Particle Inspection (EP only) Pressure : 60~80psi N_2 Gas Sample Volume : 1CFM 0.1μm and Larger	No count

PRODUCT GRADE

GRADE	AP	BA	EP
Inner Surface Roughness	Ry ≤ 25μm Cut off Length : 2.5mm Measuring Length : 12.5mm	Ry ≤ 3.0μm 10 μinch Ra(Avg.) Cut off Length : 0.8mm Measuring Length : 4mm	Ry ≤ 0.7μm 5 μinch Ra(Avg.) Cut off Length : 0.25mm Measuring Length : 1.25mm
Polishing	Machining Finish	Machining Finish	Electro Polishing Finish

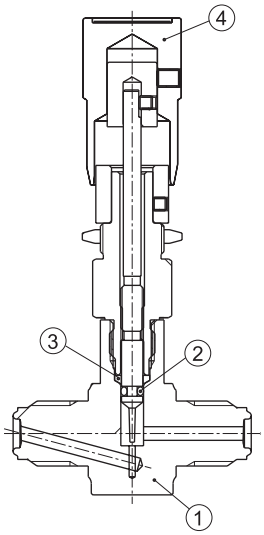

MATERIAL

NO.	NAME	MATERIAL
1	Body	316L Stainless Steel 316L Stainless Steel VAR
2	O-Ring	FKM
3	Grand Ring	Teflon
4	Handle	Aluminum

ORDERING INFORMATION

S	4	MVM	—	VM	—	V	—	P
Body Material	Connection Size	Orifice		Connection		Handle Type		Grade

MATERIAL		SIZE		ORIFICE		CONNECTION		HANDLE TYPE		GRADE	
S	316L Stainless Steel	4	1/4″	MVM	1.35	VM	MFS Male	K	Knurled	AP	AP Grade
						SW	Lok	KS	Knurled with Slot	BLANK	BA Grade
										P	EP Grade
								V	Vernier		

MODEL	CONNECTION	A	B	C	D	E	F	G
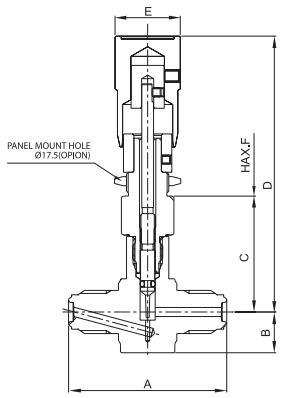	MFS Male	52.4	13.5	38.4	91	21.6	4.5	
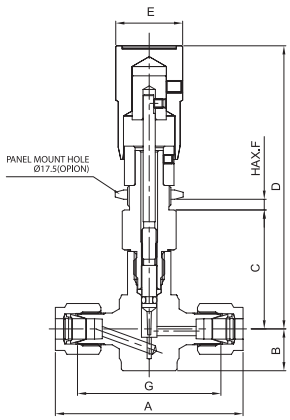	Lok	60.6	13.5	38.4	91	21.6	4.5	46.3

ULTRA - HIGH PURITY VACUUM GENERATORS

VG1 SERIES

FEATURES

- High Performance Design
- Stainless Steel 316L Construction
- Metal Face Seal and Tube Butt-Weld Connections

TECHNICAL DATA

Ultimate Pressure	50torr (66.7mbar)
Gas Flow at Ultimate	60ℓ / min
Gas Pressure at Ultimate	80psig
Optimize working Pressure	80 ~ 100psig
Max. Working Pressure	150psig (10kgf/cm^2)
Operating Temperature	0 ~ 150°C

* measured when operating gas flow is over 60LPM and extension vent tube length is over 20mm.

Note1. The dimension of drawing is for reference only. Please contact us for customer drawing and special product.

PRODUCT FEATURES

- 50torr(66.7mbar) vacuum generated with a minimum source Nitrogen pressure of 80psig
- Ultrasonic and D.I. water cleaned for semiconductor Ultra-high purity
- Cleaned, welded, assembled, tested and packaged in a Class 100 or 10 clean room
- 100% tested for vacuum performance and Helium leakage

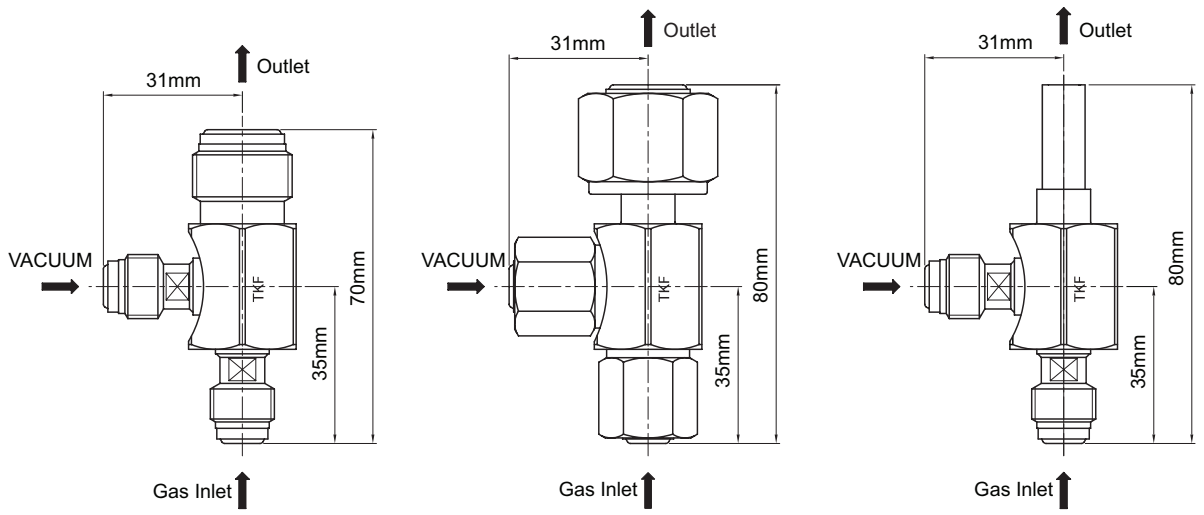

ORDERING INFORMATION

S	4	x	8	x	4	VG1	—	VM	VM	VM	—	X1	—	P
Material	Inlet Size		Outlet Size		Vacuum Size	Product		Inlet Connection	Outlet Connection	Vacuum Connection		Option		Grade

MATERIAL		SIZE		CONNECTION		GRADE	
S	316L Stainless Steel	4	1/4″	VM	MFS Male	A	AP Grade
D	316L Stainless Steel VAR	6	3/8″	VF	MFS Female	Blank	BA Grade
		8	1/2″	TW	Tube Butt Weld	P	EP Grade

VACUUM AND FLOW SPECIFICATIONS

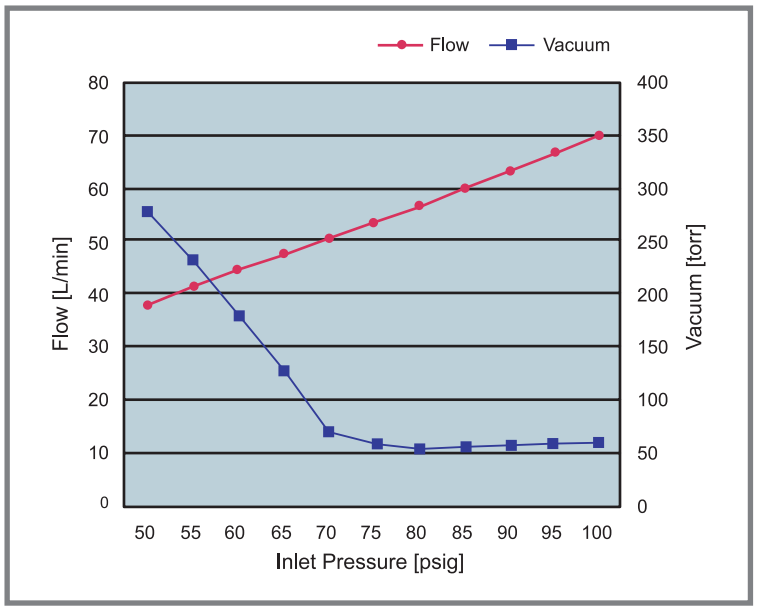

OIL FREE

TK-FUJIKIN Ball Valves

Clean Ball Valves

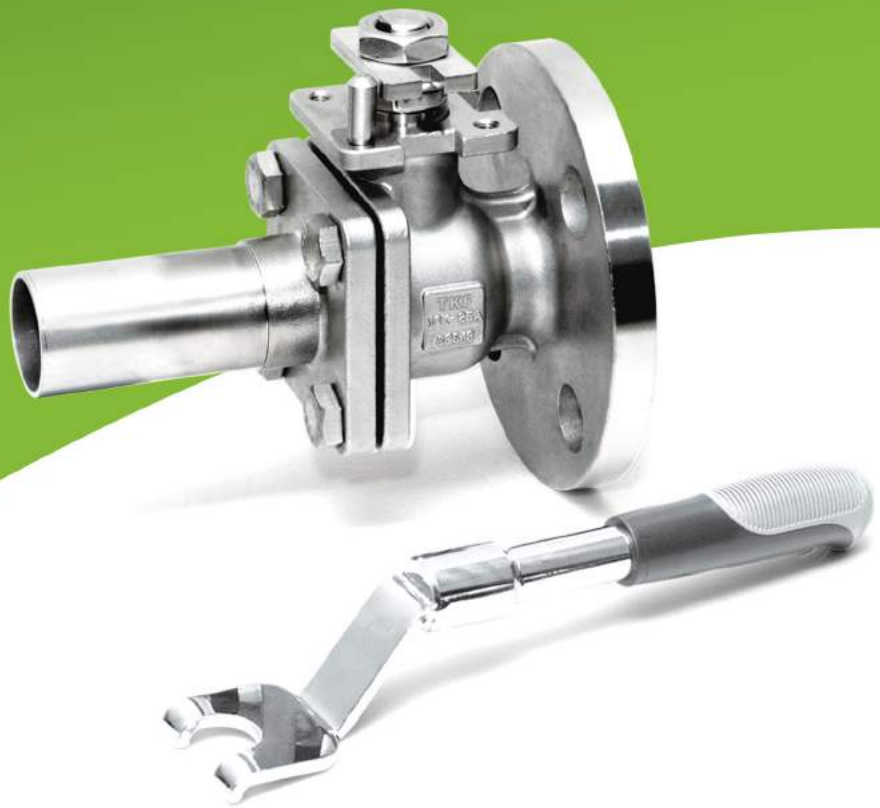

TK-FUJIKIN CORPORATION

Fujikin Carp Group

The Semiconductor manufacturing process demands that valves, Whether for high purity bulk gas or process cooling water distribution, perform at the highest levels possible.
Leak integrity, cleanliness, high flow and safety, provided at the lowest installed cost is what makes TKF Clean Ball Valves the number one specified ball valve of fabs around the world.

ORDERING INFORMATION

S	4	BL1	–	SW	–	X1	–	P
Material	Size	Product		Connection		Option		Grade

MATERIAL		SIZE		CONNECTION		GRADE	
S	316L Stainless Steel	4	1/4"	SW	Lok	AP	AP Grade
4S	304 Stainless Steel	6	3/8"	TW	Butt Weld	BLANK	BA Grade
		8	1/2"			P	EP Grade
		12	3/4"				
		16	1"				

TWO - PIECES BALL VALVE (HEX. TYPE)

- Feat Seat Material : PTFE
- Max. Pressure : 6.9 Mpa (1000PSI)
- Max. Temperature : -10°C ~ 80°Cures

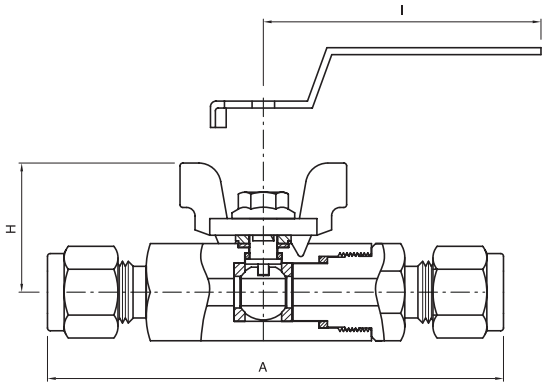

Order Number	Orifice	End Connection	Dimensions			Order Number	Orifice	End Connection	Dimensions		
			A	H	I				A	H	I
□ 4BL1-SW	5.0	1/4" Lok	80	23	56	□ 12BL1-SW	12.5	3/4" Lok	107.0	38	103
□ 6BL1-SW	7.5	3/8" Lok	92	29	81	□ 16BL1-SW	16.0	1" Lok	131.0	45	103
□ 8BL1-SW	9.0	1/2" Lok	102	35	81						

TWO - PIECES BALL VALVE (JIS 10K)

- Seat Material : PTFE
- Max. Pressure : 1Mpa (145 PSI)
- Max. Temperature : -10°C ~ 80°C

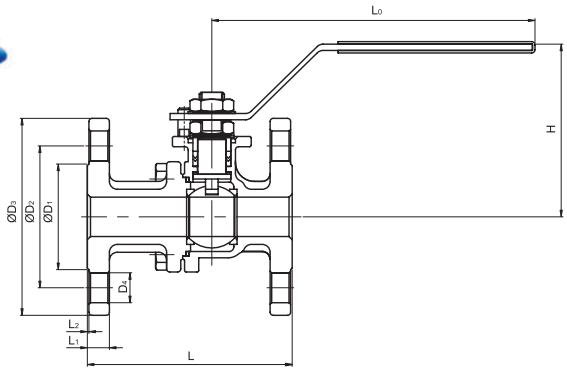

Order Number	End Connection	Dimensions								
		L	L_0	L_1	L_2	D_1	D_2	D_3	D_4	H
□ 15ABL1-FL	15A Flange	108	140	12	1	51	70	95	4 - Ø 15	80
□ 20ABL1-FL	20A Flange	117	140	14	1	57	75	100	4 - Ø 15	80
□ 25ABL1-FL	25A Flange	127	160	14	1	67	90	125	4 - Ø 19	113
□ 32ABL1-FL	32A Flange	140	160	16	2	79	100	135	4 - Ø 19	120
□ 40ABL1-FL	40A Flange	165	200	16	2	85	105	140	4 - Ø 19	135
□ 50ABL1-FL	50A Flange	178	200	16	2	95	120	155	4 - Ø 19	143
□ 65ABL1-FL	65A Flange	190	320	18	2	116	140	175	4 - Ø 19	165
□ 80ABL1-FL	80A Flange	203	320	18	2	126	150	185	8 - Ø 19	177
□ 100ABL1-FL	100A Flange	229	460	18	2	151	175	210	8 - Ø 19	190

* Option : It two pieces Ball Valve is end connection with TW and TW x FL, Our company can make the item by your order.
* End Connection : TW (Butt Weld) / TW x FL (Butt Weld Flange)

THREE - PIECES BALL VALVE

- Seat Material : PTFE
- Max. Pressure : 1Mpa (145 PSI)
- Max. Temperature : -10°C ~ 80°C

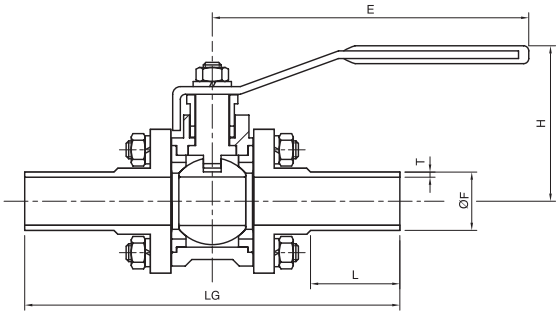

Order Number	End Connection	Dimensions						
		F	E	H	L	T		LG
						S5S	S10S	
□ 15ABL-TW	15A Pipe	21.7	101	58	37	1.65	2.1	140
□ 20ABL-TW	20A Pipe	27.2	101	58	37	1.65	2.1	140
□ 25ABL-TW	25A Pipe	34.0	152	70	37	1.65	2.8	152
□ 32ABL-TW	32A Pipe	42.7	183	95	47	1.65	2.8	190
□ 40ABL-TW	40A Pipe	48.6	183	95	47	1.65	2.8	190
□ 50ABL-TW	50A Pipe	60.5	183	105	47	1.65	2.8	212
□ 60ABL-TW	65A Pipe	76.3	256	143	52	2.10	3.0	250
□ 80ABL-TW	80A Pipe	89.1	256	154	52	2.10	3.0	258
□ 100ABL-TW	100A Pipe	114.3	302	167	52	2.10	3.0	326

SP Series

Springless Diaphragm Valves for high performance

FEATURES

- Suitable for Ultra High-Purity Applications
- 316L Stainless Steel, 316L Stainless Steel VAR Body
- Low-Pressure and High-Pressure Models
- Metal Seal, Tube Butt Weld, Lok End Connections
- Manual or Pneumatic Actuation

TK-FUJIKIN CORPORATION

Fujikin Carp Group

ORDERING INFORMATION

Number	Series	End Connection	Flow	Manual Handle	Handle	Pneumatic	Option	Grade
S : 316L Stainless steel D : 316L Stainless steel VAR	**Low - Pressure Diaphragm Valve** • 4SP(Manual) • 4PSP(Pneumatic) **High - Pressure Diaphragm Valve** • 4HSP(Manual) • 4HPSP(Pneumatic)	TW VF RM VM SW	1 2 3 4 5 6 7 8 9 10 BLABK : Straight Type	D(Directional Handle) L(Locking Handle) R(Round Handle) T(Toggle Handle)	BK - Black RD - Red BL - Blue SBL - Sky Blue WH - White GR - Green YW - Yellow OR - Orange	C - Normally Closed O - Normally Open	X **	BLANK - BA Grade P - EP Grade

GRADE	BA	EP
Inner Surface Roughness	Ry ≤ 3.0μm 10μinch Ra(Avg.) Cut Off Length : 0.8mm Measuring Length : 4mm	Ry ≤ 0.7μm 5μinch Ra(Avg.) Cut Off Length : 0.25mm Measuring Length : 1.25mm
Polishing	Machining Finish	Electro Polishing Finish

EXAMPLE PART NUMBERS

Ordering	S4SP-VM-L-GR-P	D4HPSP-VFVFVF-7-C
Material	316L Stainless Steel	316L Stainless Steel VAR
Series	Low - Pressure Manual Diaphragm Valve	High - Pressure Pneumatic Diaphragm Valve
End Connection	1/4″ Male Integral MFS Fitting	1/4″ Female Integral MFS Fitting
Flow	Straight Type	3 Port
Manual Handle	Locking Handle	-
Handle Color	Green	-
Pneumatic	-	Normally Closed
Grade	EP Grade	BA Grade

COLOR CODED HANDLES

- BL	- SBL	- OR	- YW	- GR	- RD	- BK	- WH
Blue	Sky Blue	Orange	Yellow	Green	Red	Black	White

* Eight handle colors are available
* Low-Pressure valves have blue handles as standard
* High-pressure valves have white handles as standard

FLOW PATH

Ports	Schematic	Flow Path: Closed	Flow Path: Open	Designator
4 Port				4
		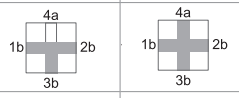		5
3 Port		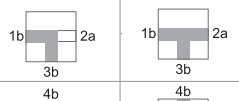		1
		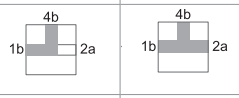		2
		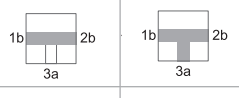		3
		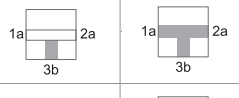		6
		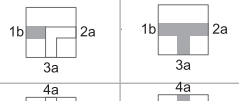		7
2 Port		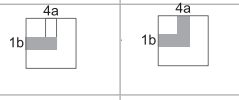		8
				9
		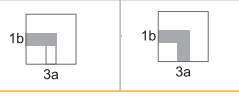		10

END CONNECTIONS

Designator			Dimensions, mm(inch) L	H	M
1/4 in. Tube Butt Weld		TW	44.2 (1.74)	22.1 (0.87)	19.3 (0.76)
1/4 in. Female MFS Fitting		VF	70.6 (2.78)	35.3 (1.39)	41.4 (1.63)
1/4 in.Male Integral MFS Fitting		VM	58.4 (2.30)	29.2 (1.15)	-
1/4 in. Lok Tube Fittings		SW	69.5 (2.74)	34.7 (1.37)	-

Top

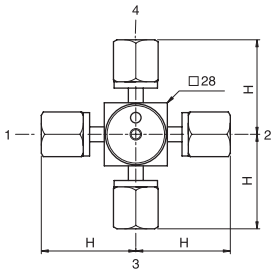

Side

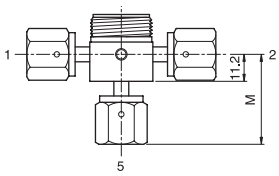

ACTUATOR OPTIONS

PNEUMATIC ACTUATORS

LOW-PRESSURE MODELS

- Pressure rating : 250 psig (17bar)
- Temperature rating :
  -10 to 150˚F (-23 to 65˚C)
- Flow coefficient : 0.27

HIGH-PRESSURE MODELS

- Pressure rating : 3045 psig (210bar)
- Temperature rating :
  -10 to 150˚F (-23 to 65˚C)
- Flow coefficient : 0.20

MANUAL ACTUATORS

Low-pressure valves have blue handle as standard.
High-pressure vlaves have white handle as standard.

DIRECTIONAL

- Quick, quarter-turn actuation
- Handle shape provides visual indication of OPEN and CLOSED position
- Available on high and low-pressure models

LOCKING

- Quick, quarter-turn actuation
- Lockable in the CLOSED position for safety
- Handle shape and window indicator provides visual indication of OPEN and CLOSED position.
- Available on high and low-pressure models

TOGGLE

- Spring-loaded toggle design for quick actuation
- Lockable in the CLOSED position for safety
- Handle position provides visual indication of OPEN and CLOSED positions
- Available on low-pressure models

ROUND

- Quick, quarter-turn actuation
- Handle with window provides visual indication of OPEN and CLOSED positions
- Available on high and low-pressure models

DIMENSIONS

LOW - PRESSURE VALVES

PNEUMATIC ACATUATOR
Male Integral MFS Fittings

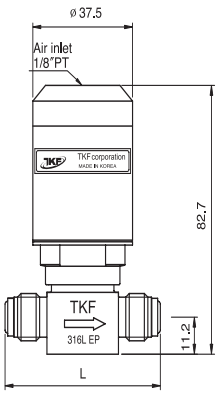

DIRECTIONAL AND ROUND HANDLE
Tube Butt Weld Ends

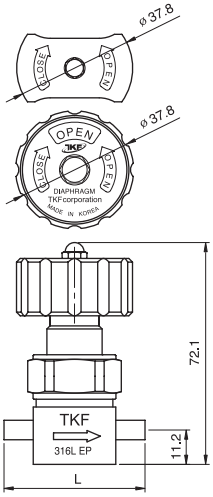

TOGGLE HANDLE
Male Rotatable MFS Fittings

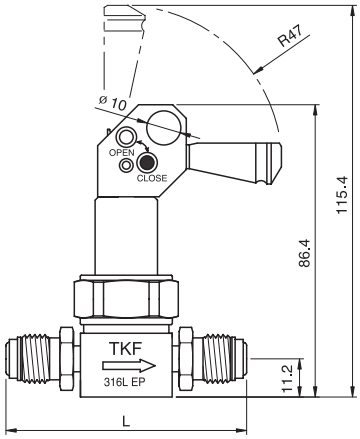

* Dimensions, in millimeters, are for reference only and are subject to change.
* Dimensions L - page 5

LOCKING HANDLE
Female MFS Fittings

Open

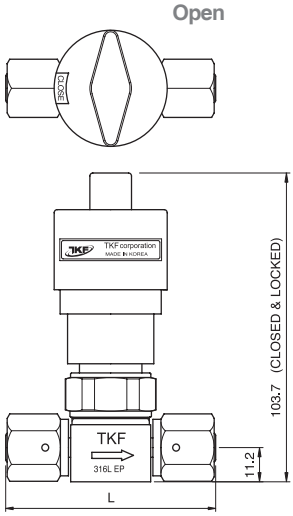

Closed and Locked

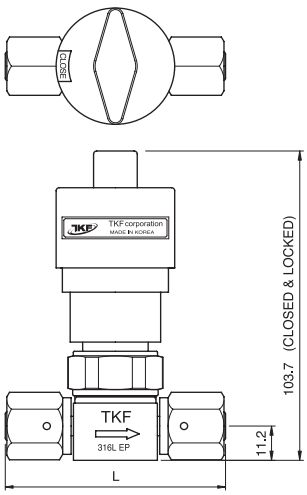

Bottom

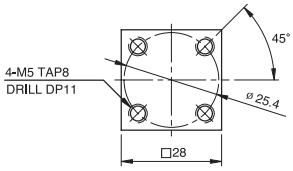

MATERIAL

Body	316L Stainless Steel 316L Stainless Steel VAR
Seat	PCTFE
Diaphragm	Ni-Co Alloy
O-Ring	Viton

MAJOR SPECIFICATIONS

	Low - Pressure Models	
	Manual Actuators	Pneumatic Actuators
Cv Valve	0.27	0.27
Orifice Size	4.0mm	4.0mm
Max. Working Pressure (G.)	Vacuum to 250psig (17bar)	
Operating Pressure (G.)	-	60 ~ 120psig (4.1 ~ 8.2bar)
Burst Pressure (G.)	3,200 psig (220bar)	
Max. Working Temp.	-10 ~ 150˚F (-23 ~ 65˚C)	
Internal Leakage Allowance (He) Test Pressure ≤ 1 x 10^{-2} Torr	≤ 1 x 10^{-9} atm · cc/sec	
External Leakage Allowance (He) Test Pressure ≤ 1 x 10^{-2} Torr	≤ 1 x 10^{-9} atm · cc/sec	
Particle Inspection (BA, EP) Pressure : 60 ~ 80psi N_2 Gas Sample Volume : 1CFM 0.1μm and Larger	No count	

DIMENSIONS

LOW - PRESSURE VALVES

PNEUMATIC ACTUATOR
Tube Butt Weld Ends

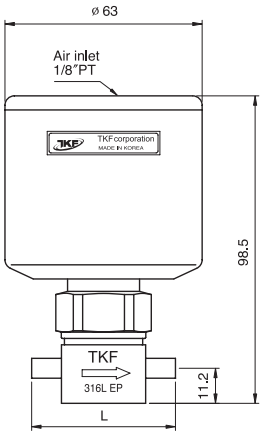

DIRECTIONAL AND ROUND HANDLE
Female MFS Fittings

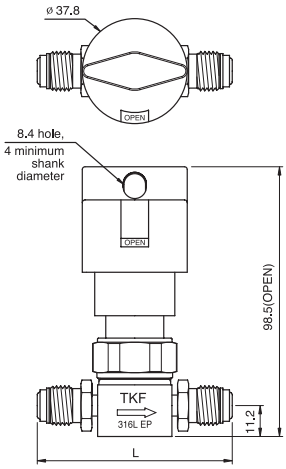

* Dimensions, in millimeters, are for reference only and are subject to change.
* Dimensions L - page 5

LOCKING HANDLE
Male Rotatable MFS Fittings

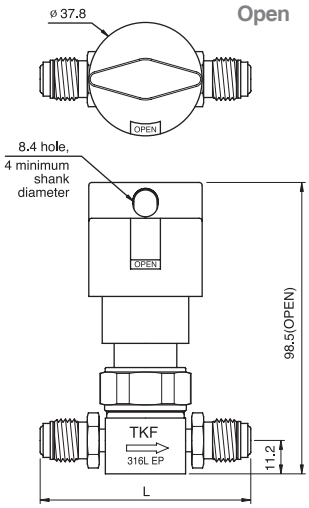

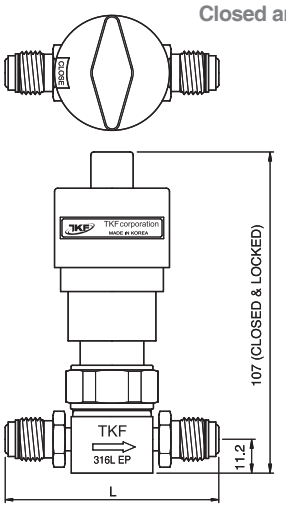

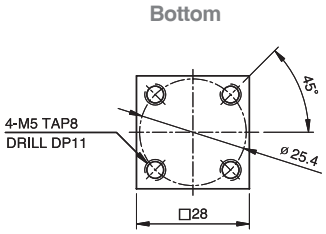

MATERIAL

Body	316L Stainless Steel 316L Stainless Steel VAR
Seat	PCTFE
Diaphragm	Ni-Co Alloy
O-Ring	FKM

MAJOR SPECIFICATIONS

	High - Pressure Models	
	Manual Actuators	Pneumatic Actuators
Cv Valve	0.2	0.2
Orifice Size	4.0mm	4.0mm
Max. Working Pressure (G.)	Vacuum to 3,045psig (210bar)	
Operating Pressure (G.)	-	70~120psig (4.8~8.2bar)
Burst Pressure (G.)	12,200 psig (840bar)	
Max. Working Temp.	-10 ~ 150˚F (-23 ~ 65˚C)	
Internal Leakage Allowance (He) Test Pressure ≤ 1 x 10^{-2} Torr	≤ 1 x 10^{-9} atm · cc/sec	
External Leakage Allowance (He) Test Pressure ≤ 1 x 10^{-2} Torr	≤ 1 x 10^{-9} atm · cc/sec	
Particle Inspection (BA, EP) Pressure : 60 ~ 80psi N_2 Gas Sample Volume : 1CFM 0.1μm and Larger	No count	

SF Series

Springless Diaphragm Valves

FEATURES

Suitable for Ultra High-Purity Applications
316L Single Melt, Double Melt Stainless Steel Body
Metal Seal, Tube Butt Weld, Tube End Connections
Manual or Pneumatic Actuation

TK-FUJIKIN CORPORATION
Fujikin Carp Group

ORDERING INFORMATION

Number	Series	End Connection	Flow	Manual Handle	Handle	Pneumatic	Option	Grade
S : 316L Stainless steel **D** : 316L Stainless steel VAR	•8SF (Manual) •8PSF (Pneumatic) 8 : 1/2"	VF RM TW	1 2 3 4 5 6 7 8 9 10 BLANK : Straight Type	L(Locking Handle) R(Round Handle)	BK - Black RD - Red BL - Blue SBL - Sky Blue WH - White GR - Greem YW - Yellow OR - Orange	C - Narmally Closed D - Narmally Open	X**	BLANK - BA Grade P- EP Grade

GRADE	BA	EP
Inner Surface Roughness	Ry ≤ 3.0μm 10μinch Ra (Avg.) Cut Off Length : 0.8mm Measuring Length : 4mm	Ry ≤ 0.7μm 5μinch Ra (Avg.) Cut Off Length : 0.25mm Measuring Length : 1.25mm
Polishing	Machining Finish	Electro Polishing Finish

EXAMPLE PART NUMBERS

Ordering	S8SF-VM-L-GR-P
Material	316L Stainless Steel
Series	Manual Diaphragm Valve
End Connection	1/2″ Male Integral MFS Fitting
Flow	Straight Type
Manual Handle	Locking Handle
Handle Color	Green
Pneumatic	-
Grade	EP Grade

COLOR CODED HANDLES

- BL	- SBL	- OR	- YW	- GR	- RD	- BK	-WH
Blue	Sky Blue	Orange	Yellow	Green	Red	Black	White

* Eight handle colors are available
* Blue Handle as standard

ACTUATOR OPTIONS

PNEUMATIC ACTUATORS

LOW-PRESSURE MODELS

- Pressure rating : 150 psig (10bar)
- Temperature rating :
  -10 to 150˚F (-23 to 65˚C)

MANUAL ACTUATORS

ROUND

- Quick, quarter-turn actuation
- Handle with window provides Visual indication of OPEN and CLOSED position
- Pressure rating : 300 psig (20.8bar)

LOCKING

- Quick, quarter-turn actuatio
- Lockable in the CLOSED position for safety
- Handle shape and window indicator provides visual indication of OPEN and CLOSED position
- Pressure rating : 300 psig (20.8bar)

DIMENSIONS

PNEUMATIC ACTUATOR

Male Integral MFS Fittings

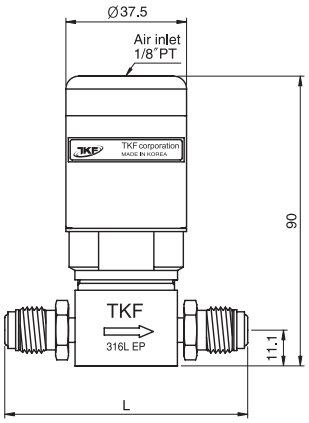

DIRECTIONAL AND ROUND HANDLE

Tube Butt Weld Ends

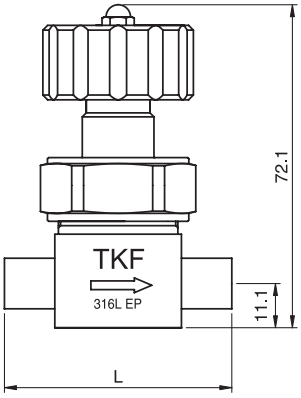

Side & Top

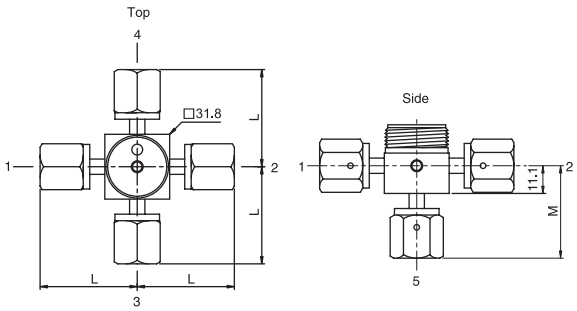

LOCKING HANDLE

Female MFS Fittings

Open

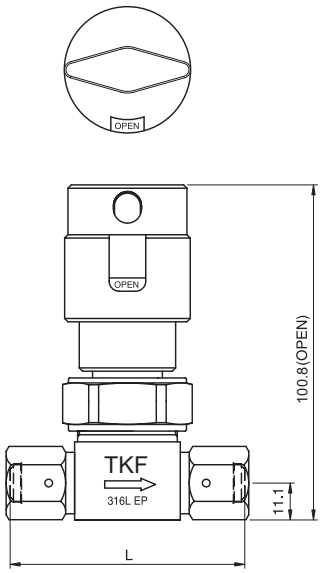

Closed and Locked

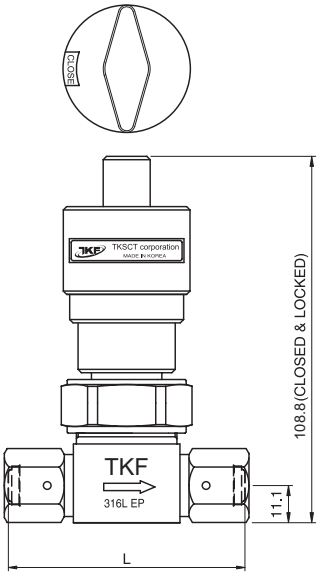

Bottom

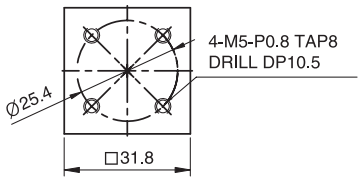

MATERIAL

Body	316L Stainless Steel 316L Stainless Steel VAR
Seat	PCTFE
Diaphragm	Ni-Co Alloy
O-Ring	FKM

MAJOR SPECIFICATIONS

	Manual Actuators	Pneumatic Actuators
Cv Valve	0.6	0.6
Orifice Size	5.8mm	5.8mm
Max. Working Pressure (G.)	Vacuum to 300 psig (20.8bar)	Vacuum to 150 psig (10bar)
Operating Pressure (G.)	-	60 ~ 100 psig (4.1 ~ 7bar)
Burst Pressure (G.)	3,200 psig (220bar)	
Max. Working Temp.	-10 ~ 150˚F (-23 ~ 65˚C)	
Internal Leakage Allowance (He) Test Pressure ≤ 1 x 10^{-2} Torr	≤ 1 x 10^{-9} atm · cc/sec	
External Leakage Allowance (He) Test Pressure ≤ 1 x 10^{-2} Torr	≤ 1 x 10^{-9} atm · cc/sec	
Particle Inspection (BA, EP) Pressure : 60 ~ 80psi N_2 Gas Sample Volume : 1CFM 0.1μm and Larger	No count	

FLOW PATH

Ports	Schematic	Flow Path		Designator
		Closed	Open	
4 Port	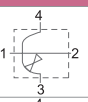	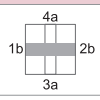	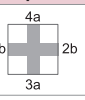	4
	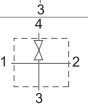	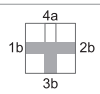		5
3 Port				1
		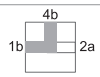		2
				3
				6
				7
2 Port		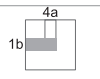		8
				9
				10

END CONNECTIONS

End Connection		Basic Ordering		L mm(inch)
Inlet/Outlet	Size	Number		
Female MFS Fittings	1/2”		S8SF-VF-	106 (4.16)
Male MFS Fittings	1/2”		S8SF-RM-	106 (4.16)
Tube Butt Weld	1/2”		S8SF-TW-	57.1 (2.25)

ULTRA HIGH PURITY PRODUCTS

OTHER PRODUCTS

Regulators

MGC (Multi Gas component)

Gas Filters

IGS (Integrated Gas System)

MFC (Mass Flow Controller)FUJIKIN

PT1 Sensor

PT2 Sensor

PT3 Sensor

TDP Series

Canister

Regulators

High Purity Gas Pressure

FEATURES

- 100% Helium leak tested
- 100% Clean room welded and assembled
- 100% DI water Cleaned
- Full line of high to low and low to high pressure control features.

TK-FUJIKIN CORPORATION

Fujikin Carp Group

REGULATORS |

SINGLE STAGE REGULATORS - LOW PRESSURE

Model	Size	Material	Hastelloy Internal	Tied Diaphragm	Inlet Pressure	Outlet Pressure	Leak Rate (atm cc/sec)	Cv	Grade
RG1	1/4"	S SH DH	○		600 PSIG	1~250 PSIG	1.0E-9	0.2	BA EP
RG2	3/8" 1/2"	S SH D DH	○		1000 PSIG 600 PSIG	1~150 PSIG	1.0E-9	0.5	BA EP
RG3	1/4"	S SH DH	○	●	1000 PSIG 600 PSIG	1~250 PSIG	1.0E-9	0.2	BA EP
RG4	3/8" 1/2"	S SH DH	○	●	1000 PSIG 600 PSIG	1~150 PSIG	1.0E-9	0.5	BA EP
PRG1	1/4" 3/8" 1/2"	S SH DH	○	●	1000 PSIG 600 PSIG	1~150 PSIG	1.0E-9	0.15	BA EP

SINGLE STAGE REGULATORS - HIGH PRESSURE

Model	Size	Material	Hastelloy Internal	Tied Diaphragm	Inlet Pressure	Outlet Pressure	Leak Rate (atm cc/sec)	Cv	Grade
RG1	1/4"	S SH DH	○		3500 PSIG	1~250 PSIG	1.0E-9	0.06	BA EP
RG2	3/8" 1/2"	S SH D DH	○		3500 PSIG	1~150 PSIG	1.0E-9	0.5	BA EP
RG3	1/4"	S SH DH	○	●	3500 PSIG	1~250 PSIG	1.0E-9	0.2	BA EP
RG4	3/8" 1/2"	S SH DH	○	●	3500 PSIG	1~150 PSIG	1.0E-9	0.5	BA EP
PRG1	1/4" 3/8" 1/2"	S SH DH	○	●	3500 PSIG	1~150 PSIG	1.0E-9	0.06	BA EP

DOUBLE STAGE REGULATORS - HIGH PRESSURE

Model	Size	Material	Hastelloy Internal	Tied Diaphragm	Inlet Pressure	Outlet Pressure	Leak Rate (atm cc/sec)	Cv	Grade
TRG	1/4"	S SH DH	○		3500 PSIG	1~150 PSIG	1.0E-9	0.06	BA EP

SINGLE STAGE REGULATORS - MICRO REGULATORS

Model	Size	Material	Hastelloy Internal	Tied Diaphragm	Inlet Pressure	Outlet Pressure	Leak Rate (atm cc/sec)	Cv	Grade
MRG3	1/4" 3/8"	S SH DH	○		150 PSIG	1~100 PSIG	1.0E-9	0.06	BA EP
BRG3	1/4" 3/8"	S SH DH	○		150 PSIG	1~100 PSIG	1.0E-9	0.06	BA EP
MRG4 MRG6	1/4" 1.125" 1.5"	S SH DH HH	○		150 PSIG	1~100 PSIG	1.0E-9	0.08	BA EP
MRG5 MRG7	1/4"	S SH DH	○		500 PSIG	1~100 PSIG	1.0E-9	0.1	BA EP

SINGLE STAGE REGULATORS - HIGH FLOW

Model	Size	Material	Hastelloy Internal	Tied Diaphragm	Inlet Pressure	Outlet Pressure	Leak Rate (atm cc/sec)	Cv	Grade
HFRG	1/4"~1/2"	S D			500 PSIG	1~150 PSIG	2.0E-8	0.85	BA EP
HFRG2	1/4"~3/4"	S D			250 PSIG	1~100 PSIG	1.0E-9	1.6	BA EP
HFRG3	3/8"~1" 15A~25A	S D			500 PSIG	1~100 PSIG	1.0E-9	1.0	BA EP
HFRG4	1/2" 3/4" 1"	S			300 PSIG	1~150 PSIG	2.0E-8	5.0	BA EP
AHFRG	15A~50A	S			300 PSIG	1~130 PSIG	2.0E-8	8.0	BA EP

CROSSOVER BOARD

Model	Size	Material	Hastelloy Internal	Tied Diaphragm	Inlet Pressure	Outlet Pressure	Leak Rate (atm cc/sec)	Cv	Grade
CORG	1/4"	S			3500 PSIG	1~150 PSIG	2.0E-8	0.06	BA

LEGEND

○	Standard
●	Optional

GRADE

BA	10 RA µinch
EP	Electropolishing 5 RA µinch

MATERIAL

Division	Body	Wetted parts	Valve spring	Seat	Diaphragm
S	316L Stainless Steel	316L Stainless Steel	SUS316L-WPA	PCTFE PFA PI	HASTELLOY C-22
SH	316L Stainless Steel	HASTELLOY C-22	INCONEL 750		
D	316L Stainless Steel VAR	316L Stainless Steel VAR	SUS316L-WPA		
DH	316L Stainless Steel VAR	HASTELLOY C-22	INCONEL 750		

SELECTION GUIDE

No.	GAS NAME		TK-FUJIKIN REGULATOR																									
			RG1 SERIES		RG2 SERIES		PRG1 SERIES		PRG2 SERIES		MRG3 SERIES		MRG4 SERIES		MRG5 SERIES		BRG3 SERIES		HFRG SERIES		HFRG2 SERIES		HFRG3 SERIES		HFRG4 SERIES		AHFRG SERIES	
			SUS	HAS	SUS	HAS	SUS	HAS	SUS	HAS	SUS	HAS	SUS	HAS	SUS	HAS	SUS	HAS	SUS	HAS	SUS	HAS	SUS	HAS	SUS	HAS	SUS	HAS
1	ARGON	Ar	O	O	O	O	O	O	O	O	O	O	O	O	O	O	O	O	O	O	O	O	O	O	O	O	O	O
2	ARSINE	AsH_3	O	X	O	X	O	X	O	X	O	X	O	X	O	X	O	X	O	X	O	X	O	X	O	X	O	X
3	DIBORANE	B_2H_6	O	O	O	O	O	O	O	O	O	O	O	O	O	O	O	O	O	O	O	O	O	O	O	O	O	O
4	BORON TRICHLORIDE	BCl_3	O	O	O	O	O	O	O	O	O	O	O	O	O	O	O	O	X	X	O	O	O	O	X	X	X	X
5	HALOCARBON-116 HEXAFLUOROETHANE	$C2F_6$	O	O	O	O	O	O	O	O	O	O	O	O	O	O	O	O	O	O	O	O	O	O	O	O	O	O
6	Ethene,Ethylene	$C2H_4$	O	O	O	O	O	O	O	O	O	O	O	O	O	O	O	O	O	O	O	O	O	O	O	O	O	O
7	PERFLUOROPROPANE	$C3F_8$	O	O	O	O	O	O	O	O	O	O	O	O	O	O	O	O	O	O	O	O	O	O	O	O	O	O
8	Sifren® 46 Hexafluorobutadiene	$C4F_6$	-	O	-	O	-	O	-	O	-	O	-	O	-	O	-	O	-	X	-	O	-	O	-	X	-	X
9	Octafluorocyclobutane	$C4F_8$	O	O	O	O	O	O	O	O	O	O	O	O	O	O	O	O	X	X	O	O	O	O	X	X	X	X
10	Octafluorocyclopentene	$C5F_8$	-	O	-	O	-	O	-	O	-	O	-	O	-	O	-	O	-	O	-	O	-	O	-	O	-	O
11	Tetrafluoromethane	CF_4	O	O	O	O	O	O	O	O	O	O	O	O	O	O	O	O	O	O	O	O	O	O	O	O	O	O
12	Difluoromethane	CH_2F_2	-	O	-	O	-	O	-	O	-	O	-	O	-	O	-	O	-	O	-	O	-	O	-	O	-	O
13	Methyl Fluoride	CH_3F	O	O	O	O	O	O	O	O	O	O	O	O	O	O	O	O	O	O	O	O	O	O	O	O	O	O
14	Methane	CH_4	O	O	O	O	O	O	O	O	O	O	O	O	O	O	O	O	O	O	O	O	O	O	O	O	O	O
15	Trifluoromethane	CHF_3	O	O	O	O	O	O	O	O	O	O	O	O	O	O	O	O	O	O	O	O	O	O	O	O	O	O
16	Chlorine	Cl_2	O	O	O	O	O	O	O	O	O	O	O	O	O	O	O	O	X	X	O	O	O	O	X	X	X	X
17	Chlorotrifluoromethane	ClF_3	-	O	-	O	-	O	-	O	-	O	-	O	-	O	-	O	-	X	-	O	-	O	-	X	-	X
18	Carbon Monoxide	CO	O	O	O	O	O	O	O	O	O	O	O	O	O	O	O	O	O	O	O	O	O	O	O	O	O	O
19	Carbon Dioxide	CO_2	O	O	O	O	O	O	O	O	O	O	O	O	O	O	O	O	O	O	O	O	O	O	O	O	O	O
20	Deuterium	D_2	O	O	O	O	O	O	O	O	O	O	O	O	O	O	O	O	O	O	O	O	O	O	O	O	O	O
21	≤20%Fluorine	$\leq 20\%F_2$	-	O	-	O	-	O	-	O	-	O	-	O	-	O	-	O	-	X	-	O	-	O	-	X	-	X
22	Germane	GeH_4	O	O	O	O	O	O	O	O	O	O	O	O	O	O	O	O	O	O	O	O	O	O	O	O	O	O
23	Hydrogen	H_2	O	O	O	O	O	O	O	O	O	O	O	O	O	O	O	O	X	X	O	O	O	O	X	X	X	X
24	Hydrogen Bromide	HBr	O	O	O	O	O	O	O	O	O	O	O	O	O	O	O	O	X	X	O	O	O	O	X	X	X	X
25	Hydrogen Chloride	HCl	X	O	X	O	X	O	X	O	X	O	X	O	X	O	X	O	X	X	X	O	X	O	X	X	X	X
26	Helium	He	O	O	O	O	O	O	O	O	O	O	O	O	O	O	O	O	O	O	O	O	O	O	O	O	O	O
27	Hydrogen Fluoride	HF	X	O	X	O	X	O	X	O	X	O	X	O	X	O	X	O	X	X	X	O	X	O	X	X	X	X
28	AMMONIA	NH_3	O	O	O	O	O	O	O	O	O	O	O	O	O	O	O	O	X	X	O	O	O	O	X	X	X	X
29	Nitrogen	N_2	O	O	O	O	O	O	O	O	O	O	O	O	O	O	O	O	O	O	O	O	O	O	O	O	O	O
30	Nitrous Oxide	N_2O	O	O	O	O	O	O	O	O	O	O	O	O	O	O	O	O	X	X	O	O	O	O	X	X	X	X
31	Nitrogen Trifluoride	NF_3	O	O	O	O	O	O	O	O	O	O	O	O	O	O	O	O	X	X	O	O	O	O	X	X	X	X
32	Nitrogen Monoxide	NO	O	O	O	O	O	O	O	O	O	O	O	O	O	O	O	O	O	O	O	O	O	O	O	O	O	O
33	Oxygen	O_2	O	O	O	O	O	O	O	O	O	O	O	O	O	O	O	O	O	O	O	O	O	O	O	O	O	O
34	Phosphene	PH_3	O	O	O	O	O	O	O	O	O	O	O	O	O	O	O	O	X	X	O	O	O	O	X	X	X	X
35	Sulfur Hexafluoride	SF_6	O	O	O	O	O	O	O	O	O	O	O	O	O	O	O	O	O	O	O	O	O	O	O	O	O	O
36	Disilane	Si2H6	O	O	O	O	O	O	O	O	O	O	O	O	O	O	O	O	X	X	O	O	O	O	X	X	X	X
37	Silicon Tetrafluoride	SiF_4	X	O	X	O	X	O	X	O	X	O	X	O	X	O	X	O	X	X	X	O	X	O	X	X	X	X
38	Dichlorosilane	$SiH2Cl_2$	X	O	X	O	X	O	X	O	X	O	X	O	X	O	X	O	X	X	X	O	X	O	X	X	X	X
39	Silane	SiH_4	O	O	O	O	O	O	O	O	O	O	O	O	O	O	O	O	O	O	O	O	O	O	O	O	O	O
40	Trichlorosilane	$SiHCl_3$	O	O	O	O	O	O	O	O	O	O	O	O	O	O	O	O	O	O	O	O	O	O	O	O	O	O
41	Sulfur Dioxide	SO_2	O	O	O	O	O	O	O	O	O	O	O	O	O	O	O	O	X	X	O	O	O	O	X	X	X	X
42	Tungsten Hexafluoride	WF_6	X	O	X	O	X	O	X	O	X	O	X	O	X	O	X	O	X	X	X	O	X	O	X	X	X	X
43	Xenon	Xe	O	O	O	O	O	O	O	O	O	O	O	O	O	O	O	O	O	O	O	O	O	O	O	O	O	O
44	Boron Trifluoride	BF_3	X	O	X	O	X	O	X	O	X	O	X	O	X	O	X	O	X	X	X	O	X	O	X	X	X	X
45	Chlorine	Cl_2	O	O	O	O	O	O	O	O	O	O	O	O	O	O	O	O	O	O	O	O	O	O	O	O	O	O
46	Halocarbon 13	$CClF_3$	O	O	O	O	O	O	O	O	O	O	O	O	O	O	O	O	O	O	O	O	O	O	O	O	O	O
47	Halocarbon 115	C_2CLF_5	O	O	O	O	O	O	O	O	O	O	O	O	O	O	O	O	O	O	O	O	O	O	O	O	O	O
48	Trimethylamine	$(CH_3)_3 3N$	O	O	O	O	O	O	O	O	O	O	O	O	O	O	O	O	O	O	O	O	O	O	O	O	O	O
49	Hydrogen Selenide	H_2Se	O	O	O	O	O	O	O	O	O	O	O	O	O	O	O	O	O	O	O	O	O	O	O	O	O	O
50	Krypton	Kr	O	O	O	O	O	O	O	O	O	O	O	O	O	O	O	O	O	O	O	O	O	O	O	O	O	O
51	Neon	Ne	O	O	O	O	O	O	O	O	O	O	O	O	O	O	O	O	O	O	O	O	O	O	O	O	O	O
52	Ozone	O_3	X	X	X	X	X	X	X	X	X	X	X	X	X	X	X	X	X	X	X	X	X	X	X	X	X	X
53	Phosphorous Trifluoride	PF_3	X	O	X	O	X	O	X	O	X	O	X	O	X	O	X	O	X	X	X	O	X	O	X	X	X	X
54	Silicon Tetrachloride	$SiCl_4$	X	O	X	O	X	O	X	O	X	O	X	O	X	O	X	O	X	X	X	O	X	O	X	X	X	X
55	Trimethylsilane	$SiH(CH_3)_3$	O	O	O	O	O	O	O	O	O	O	O	O	O	O	O	O	O	O	O	O	O	O	O	O	O	O

O : 사용가능 X : 사용불가 – : 사용검토

RG1 SERIES

ULTRA HIGH PURITY REGULATOR

- Designed for point-of-use medium flow to be used in process gas cabinets for gas companies, equipment manufactures and semiconductor manufacturers.
- Precise control of gas pressure at or near the process tool for flow rates of up to 250 SLPM at 300 PSIaG inlet.
- All internal surfaces are finished with 10Ra or 5Ra to ensure minimal particle generation and entrapment. Metal-to-metal diaphragm seals provide enhanced leak tight integrity.
- Every step of assembly, welding, testing and final cleaning finished in Class 100 Cleanrooms.

SPECIFICATIONS

Fluid Media	
All gases corrosive or non-corrosive or those requiring high purity regulation compatible with materials of construction. For other media, consult with factory.	
Pressure Rating (Per criteria of ANSI / ASME B31.3.)	
Max. rated inlet pressure	3500 or 600 PSIG (241 or 41 bar)
Outlet pressure ranges	1-30, 1-60, 1-100, 1-150 or 1-250 PSIG (.1-2.1, .1-4.1, .1-6.9, .1-10.3 or .1-17.3bar)
Design proof pressure	150% of Maximum rated pressure
Materials in Contact with Media	
Body	316L Stainless Steel with BA, Electropolish
Seat	PCTFE (PI optional for 3500 PSIG model only)
Diaphragm	Hastelloy C-22
Gas contact parts	316L Stainless Steel / Hastelloy C-22 / Inconel 750
Other Parameters	
Flow coefficient	Cv = 0.06 (3500 PSIG model), Cv = 0.2 (600 PSIG model)
Certified maximum inboard leak rate	1 x 10^{-9} atm cc / sec He
Internal surface finish	10Ra or 5Ra microinch (.25 or .13 micrometer)
Operating temperature — PCTFE seat	-15°F to +176°F (-26°C to +80°C)
Operating temperature — PI seat	-15°F to +350°F (-26°C to +177°C)
Weight (w/o gauges)	2.0lbs. (0.9kg)

FLOW CURVES

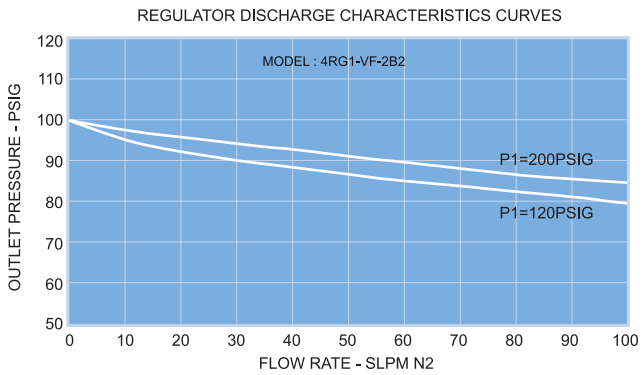

MATERIAL

Wetted Parts	RG1 Series
Body	316L Stainless Steel
Seat Holder	316L Stainless Steel Hastelloy C-22
Main Valve	316L Stainless Steel Hastelloy C-22
Valve Spring	316 Stainless Steel Inconel 750
Valve Bush	316L Stainless Steel Hastelloy C-22
Seat	PCTFE (Option : PI)
Diaphragm	Hastelloy C-22

ORDERING INFORMATION

S	4	RG1	–	VF	–	1	1	C	2	3	–	X-NO.	–	P
1	2	3		4		5	6	7	8	9		10		11

1 Material	S = 316L Stainless steel	SH = 316L Stainless steel with Hastelloy internals DH = 316L Stainless steel VAR with Hastelloy internals
2 Connection Size	4 = 1/4"	
3 Product	RG1 Series	
4 Connection Type	NF = Female NPT Thread SW = Compression Lok Fitting TW = Tube Butt Weld	VF = Female Type Face Seal VM = Male Type Face Seal VMF = Fixed Male Type Face Seal
5 Maximum Inlet Pressure	1 = 3500 PSIG	2 = 600 PSIG
6 Maximum Range of Inlet Gauge	1 = 600 PSIG 2 = 1000 PSIG 3 = 3500 PSIG	4 = 4000 PSIG Blank = No Gauge
7 Gauge Port Configuration	A = No Gauge Port (Fig. A) B = 1/4" Internal Face Seal (Fig. C) C = 1/4" Internal Face Seal (Fig. B) D = 1/4" Internal Face Seal (Fig. D) E = 1/4" Male Face Seal (Fig. D) F = 1/4" Male Face Seal (Fig. C) G = 1/4" Male Face Seal (Fig. B) H = 1/4" Female Face Seal (Fig. D)	I = 1/4" Female Face Seal (Fig. C) J = 1/4" Female Face Seal (Fig. B) K = 1/4" Fixed Male Face Seal (Fig. B) L = 1/4" Fixed Male Face Seal (Fig. C) M = 1/4" Fixed Male Face Seal (Fig. D) N = 1/4" Female NPT Thread (Fig.B) O = 1/4" Female NPT Thread (Fig.C) P = 1/4" Female NPT Thread (Fig.D)
8 Outlet Pressure Range	0 = 1 ~ 30 PSIG 1 = 1 ~ 60 PSIG 2 = 1 ~ 100 PSIG	3 = 1 ~ 250 PSIG 4 = 1 ~ 150 PSIG
9 Maximum Range of Outlet Gauge	0 = 30 PSIG 1 = 60 PSIG 2 = 100 PSIG 3 = 160 PSIG	4 = 200 PSIG 5 = 300 PSIG Blank = No Gauge
10 User Option	Customization (※Standard : Blank)	
11 Grade	Blank = BA Standard (10 Ra µinch) P = Electropolishing (5 Ra µinch) PX = Electropolishing (5 Ra µinch)	

GAUGE PORT INFORMAITON

1/4" INTERNAL FACE SEAL

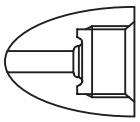

1/4" FEMALE NPT THREAD

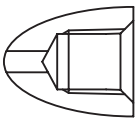

1/4" MALE FACE SEAL

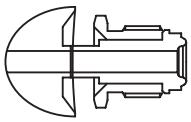

1/4" FEMALE FACE SEAL

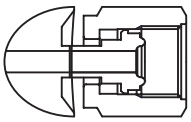

1/4" FIXED MALE FACE SEAL

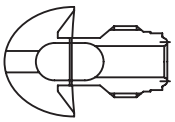

PORT CONFIGURATION

Major Configuration

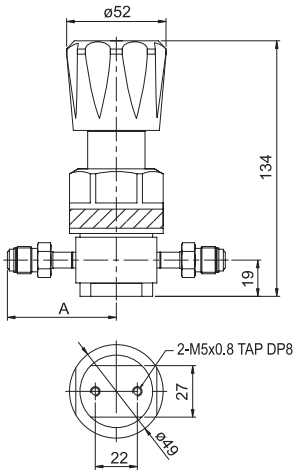

Inlet / Outlet		
Size	Connection	A±0.5
1/4"	VF	47
1/4"	VM	57/47(-X84)
1/4"	SW	47.5
1/4"	TW	38
1/4"	NF	24.5
1/4"	VM X VF	47

Port Configurations

Fig.A (NO GAUGE)

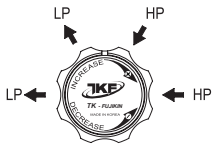

Fig.B (2 GAUGE)

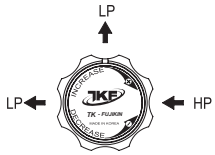

Fig.C (1 GAUGE)

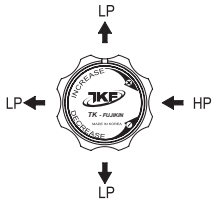

Fig.D (2 GAUGE)

RG2 SERIES

ULTRA HIGH PURITY REGULATOR

- Designed for point-of-use high flow to be used in process gas cabinets for gas companies, equipment manufactures and semiconductor manufacturers.
- The RG2 provides precise control of process gas pressure at or near the tool for flow rates of up to 600 SLPM at 300 PSIG inlet.
- All internal surfaces are finished with 10Ra or 5Ra to ensure minimal particle generation and entrapment. Metal-to-metal diaphragm seals provide enhanced leak tight integrity.
- Every step of assembly, welding, testing and final cleaning finished in Class 100 Cleanrooms.

SPECIFICATIONS

Fluid Media		
All gases corrosive or non-corrosive or those requiring high purity regulation compatible with materials of construction. For other media, consult with factory.		
Pressure Rating (Per criteria of ANSI / ASME B31.3.)		
Max. rated inlet pressure		600, 1000, 3500 PSIG (41, 69, 241 bar)
Outlet pressure ranges		1-30, 1-60, 1-100 and 1-150 PSIG (.1-2.1, .1-4.1, .1-6.9 and .1-10.3bar)
Design proof pressure		150% of Maximum rated pressure
Materials in Contact with Media		
Body		316L Stainless Steel with BA, Electropolish
Seat		3500 PSIG - PI / 1000 PSIG - PCTFE / 600 PSIG - PFA
Diaphragm		Hastelloy C-22
Gas contact parts		316L Stainless Steel / Hastelloy C-22 / Inconel 750
Other Parameters		
Flow coefficient		Cv = 0.5
Certified maximum inboard leak rate		1 x 10^{-9} atm cc / sec He
Internal surface finish		10Ra or 5Ra microinch (.25 or .13 micrometer)
Operating temperature	PFA seat	-15°F to + 159.8°F (-26°C to +71°C)
	PCTFE seat	-15°F to + 200°F (-26°C to +93°C)
	PI seat	-15°F to + 350°F (-26°C to +149°C)
Weight (w/o gauges)		3.5lbs. (1.6kg)

FLOW CURVES

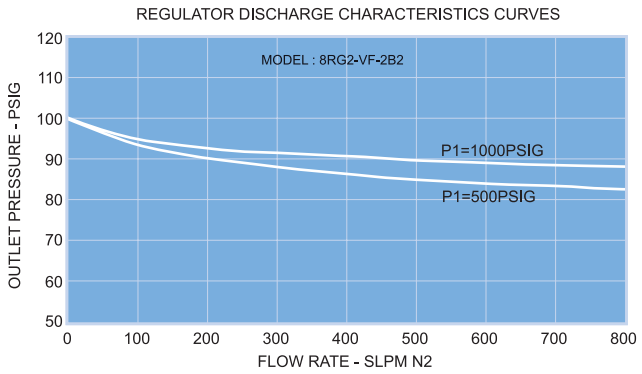

MATERIAL

Wetted Parts	RG2 Series
Body	316L Stainless Steel
Main Valve	316L Stainless Steel
Valve Spring	316 Stainless Steel Inconel 750
Seat	PFA PCTFE PI
Diaphragm	Hastelloy C-22

ORDERING INFORMATION

S	8	RG2	–	VF	–	3	1	C	1	2	–	X-NO.	–	P
1	2	3		4		5	6	7	8	9		10		11

1 Material	S = 316L Stainless steel D = 316L Stainless steel VAR	SH = 316L Stainless steel with Hastelloy internals DH = 316L Stainless steel VAR with Hastelloy internals
2 Connection Size	6 = 3/8" 8 = 1/2"	
3 Product	RG2 Series	
4 Connection Type	NF = Female NPT Thread SW = Compression Lok Fitting TW = Tube Butt Weld	VF = Female Type Face Seal VM = Male Type Face Seal VMF = Fixed Male Type Face Seal
5 Maximum Inlet Pressure	1 = 3500 PSIG 2 = 1000 PSIG	3 = 600 PSIG
6 Maximum Range of Inlet Gauge	1 = 600 PSIG 2 = 1000 PSIG 3 = 3500 PSIG	4 = 4000 PSIG Blank = No Gauge
7 Gauge Port Configuration	A = No Gauge Port (Fig. A) B = 1/4" Internal Face Seal (Fig. C) C = 1/4" Internal Face Seal (Fig. B) D = 1/4" Internal Face Seal (Fig. D) E = 1/4" Male Face Seal (Fig. D) F = 1/4" Male Face Seal (Fig. C) G = 1/4" Male Face Seal (Fig. B) H = 1/4" Female Face Seal (Fig. D)	I = 1/4" Female Face Seal (Fig. C) J = 1/4" Female Face Seal (Fig. B) K = 1/4" Fixed Male Face Seal (Fig. B) L = 1/4" Fixed Male Face Seal (Fig. C) M = 1/4" Fixed Male Face Seal (Fig. D) N = 1/4" Female NPT Thread (Fig.B) O = 1/4" Female NPT Thread (Fig.C) P = 1/4" Female NPT Thread (Fig.D)
8 Outlet Pressure Range	0 = 1 ~ 30 PSIG 1 = 1 ~ 60 PSIG	2 = 1 ~ 100 PSIG 3 = 1 ~ 150 PSIG
9 Maximum Range of Outlet Gauge	0 = 30 PSIG 1 = 60 PSIG 2 = 100 PSIG	3 = 160 PSIG 4 = 200 PSIG Blank = No Gauge
10 User Option	Customization (※Standard : Blank)	
11 Grade	Blank = BA Standard (10 Ra µinch) P = Electropolishing (5 Ra µinch) PX = Electropolishing (5 Ra µinch)	

GAUGE PORT INFORMAITON

1/4" INTERNAL FACE SEAL

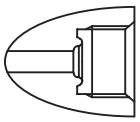

1/4" FEMALE NPT THREAD

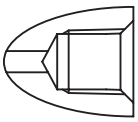

1/4" MALE FACE SEAL

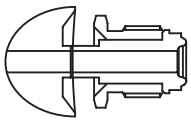

1/4" FEMALE FACE SEAL

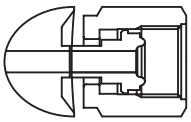

1/4" FIXED MALE FACE SEAL

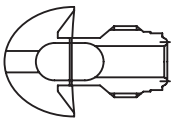

PORT CONFIGURATION

Major Configuration

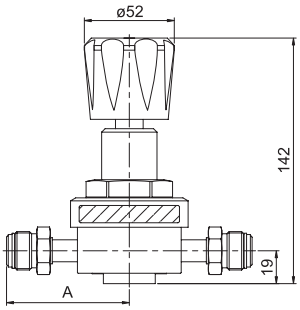

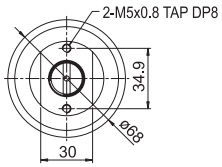

Inlet / Outlet		
Size	Connection	A±0.5
3/8"	SW	58.2
1/2"	VF	71
1/2"	VM	71
1/2"	SW	58.2
1/2"	TW	47
1/2"	NF	30

Port Configurations

Fig.A (NO GAUGE)

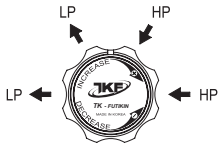

Fig.B (2 GAUGE)

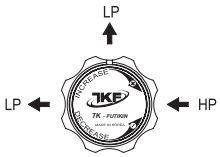

Fig.C (1 GAUGE)

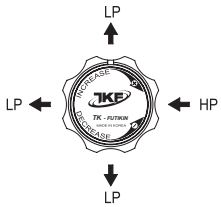

Fig.D (2 GAUGE)

RG1A SERIES

ULTRA HIGH PURITY REGULATOR

- Designed for point-of-use medium flow to be used in process gas cabinets for gas companies, equipment manufactures and semiconductor manufacturers.
- All internal surfaces are finished with 10Ra or 5Ra to ensure minimal particle generation and entrapment.
- Metal-to-metal diaphragm seals provide enhanced leak tight integrity.
- Every step of assembly, welding, testing and final cleaning finished in Class 100 or 10 cleanrooms.

SPECIFICATIONS

Fluid Media	
All gases corrosive or non-corrosive or those requiring high purity regulation compatible with materials of construction. For other media, consult with factory.	
Pressure Rating	**Per criteria of ANSI / ASME B31.3.**
Max. rated inlet pressure	3500 psig (241 bar)
Outlet pressure ranges	1-30, 1-60, 1-100, 1-150 psig (.1-2.1, .1-4.1, .1-16.9, .1-10.3 bar)
Design proof pressure	150% of Maximum rated pressure
Materials in Contact with Media	
Body	316L Stainless Steel with BA, Electropolish
Seat	PCTFE
Diaphragm	Hastelloy C-22
Gas contact parts	316L Stainless Steel / Hastelloy C-22 / Inconel X-750
Other Parameters	
Flow coefficient	Cv = 0.2
Certified maximum inboard leak rate	1 x 10^{-9} atm cc / sec He
Internal surface finish	10Ra or 5Ra microinch (.25 or .13 micrometer)
Operating temperature PCTFE seat	-15°F to + 176°F (-26°C to +80°C)
Weight (w/o gauges)	2.8lbs. (1.26kg)

FLOW CURVES

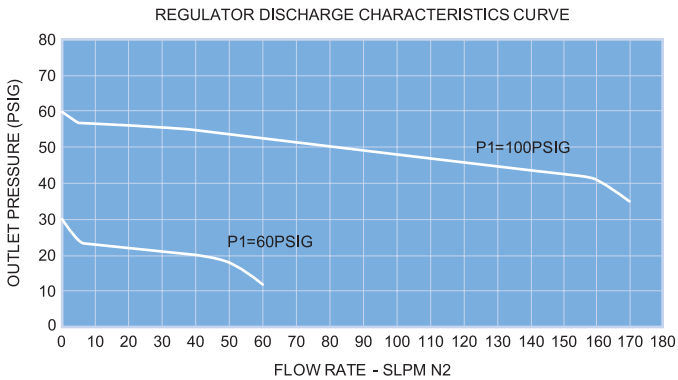

MATERIAL

Wetted Parts	RG1A Series
Body	316L Stainless Steel
Seat	PCTFE
Diaphragm	Hastelloy C-22
Gas Contact Parts	316L SS / Hastelloy C-22 / Inconel X-750

ORDERING INFORMATION

S	4	RG1A	–	VF	–	1	3	C	2	3	–	X123	–	P
1	2	3		4		5	6	7	8	9		10		11

1 Material	S = 316L Stainless steel
2 Connection Size	4 = 1/4"
3 Product	RG1A Series
4 Connection Type	NF = Female NPT Thread VF = Female Type Face Seal NSW = Female NPT Thread + Compression Lok Fitting
5 Maximum Inlet Pressure	1 = 3500 PSIG 2 = 600 PSIG
6 Maximum Range of Inlet Gauge	1 = 600 PSIG 2 = 1000 PSIG 3 = 3500 PSIG 4 = 4000 PSIG Blank = No Gauge
7 Gauge Port Configuration	A = No Gauge Port (Fig. A) B = 1/4" Internal Face Seal (Fig. C) C = 1/4" Internal Face Seal (Fig. B) D = 1/4" Internal Face Seal (Fig. D) E = 1/4" Male Face Seal (Fig. D) F = 1/4" Male Face Seal (Fig. C) H = 1/4" Female Face Seal (Fig. D) I = 1/4" Female Face Seal (Fig. C) N = 1/4" Female NPT Thread (Fig.B) O = 1/4" Female NPT Thread (Fig.C) P = 1/4" Female NPT Thread (Fig.D)
8 Outlet Pressure Range	0 = 1 ~ 30 PSIG 1 = 1 ~ 60 PSIG 2 = 1 ~ 100 PSIG 3 = 1 ~ 150 PSIG
9 Maximum Range of Outlet Gauge	0 = 30 PSIG 1 = 60 PSIG 2 = 100 PSIG 3 = 150 PSIG 4 = 200 PSIG Blank = No Gauge
10 User Option	Customization
11 Grade	Blank = BA Standard (10 Ra µinch) P = Electropolishing (5 Ra µinch) PX = Electropolishing (5 Ra µinch)

PORT CONFIGURATION

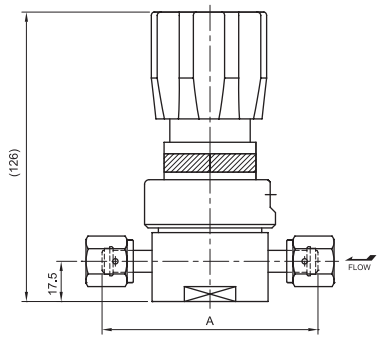

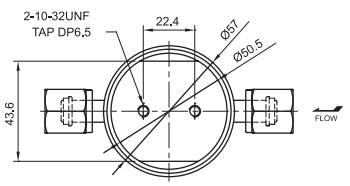

Inlet / Outlet		
Size	Connection	A
1/4"	VF	94
1/4"	NF	50.5
1/4"	NSW	91.1

Port Configurations

Fig.A(NO GAUGE)

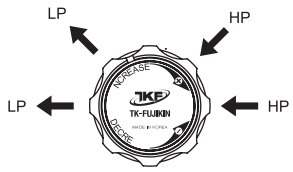

Fig.B(2 GAUGE)

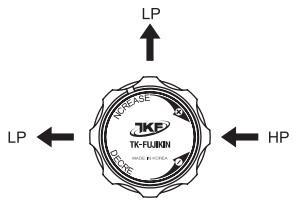

Fig.C(1 GAUGE)

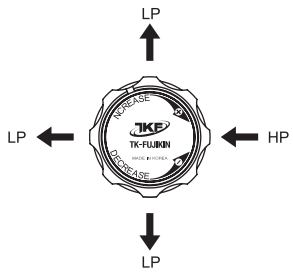

Fig.D(2 GAUGE)

REGULATORS |

RG2A SERIES

ULTRA HIGH PURITY REGULATOR

- Designed for point-of-use high flow to be used in process gas cabinets for gas companies, equipment manufactures and semiconductor manufacturers.
- All internal surfaces are finished with 10Ra or 5Ra to ensure minimal particle generation and entrapment. Metal-to-metal diaphragm seals provide enhanced leak tight integrity.
- Every step of assembly, welding, testing and final cleaning finished in Class 100 or 10 cleanrooms.

SPECIFICATIONS

Fluid Media	
All gases corrosive or non-corrosive or those requiring high purity regulation compatible with materials of construction. For other media, consult with factory.	
Pressure Rating	**Per criteria of ANSI / ASME B31.3.**
Max. rated inlet pressure	1700 psig (117 bar)
Outlet pressure ranges	1-30, 1-60, 1-100, 1-150 psig (.1-2.1, .1-4.1, .1-16.9, .1-10.3 bar)
Design proof pressure	150% of Maximum rated pressure
Materials in Contact with Media	
Body	316L Stainless Steel with BA, Electropolish
Seat	PCTFE
Diaphragm	Hastelloy C-22
Gas contact parts	316L Stainless Steel
Other Parameters	
Flow coefficient	Cv = 1.2
Certified maximum inboard leak rate	1 x 10^{-9} atm cc / sec He
Internal surface finish	10Ra or 5Ra microinch (.25 or .13 micrometer)
Operating temperature PCTFE seat	-15°F to + 176°F (-26°C to +80°C)
Weight (w/o gauges)	4.1lbs. (1.87kg)

FLOW CURVES

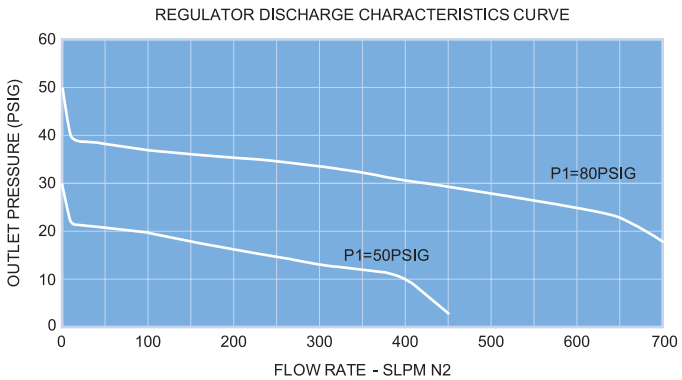

MATERIAL

Wetted Parts	RG2A Series
Body	316L Stainless Steel
Seat	PCTFE
Diaphragm	Hastelloy C-22
Gas Contact Parts	316L SS

ORDERING INFORMATION

S	8	RG2A	–	VF	–	1	1	C	2	3	–	X123	–	P
1	2	3		4		5	6	7	8	9		10		11

1 Material	S = 316L Stainless steel
2 Connection Size	8 = 1/2"
3 Product	RG2A Series
4 Connection Type	NF = Female NPT Thread VF = Female Type Face Seal NSW = Female NPT Thread + Compression Lok Fitting
5 Maximum Inlet Pressure	1 = 1700 psig
6 Maximum Range of Inlet Gauge	1 = 3500 PSIG Blank = No Gauge
7 Gauge Port Configuration	A = No Gauge Port (Fig. A) B = 1/4" Internal Face Seal (Fig. C) C = 1/4" Internal Face Seal (Fig. B) D = 1/4" Internal Face Seal (Fig. D) E = 1/4" Male Face Seal (Fig. D) F = 1/4" Male Face Seal (Fig. C) H = 1/4" Female Face Seal (Fig. D) I = 1/4" Female Face Seal (Fig. C) N = 1/4" Female NPT Thread (Fig.B) O = 1/4" Female NPT Thread (Fig.C) P = 1/4" Female NPT Thread (Fig.D)
8 Outlet Pressure Range	0 = 1 ~ 30 PSIG 1 = 1 ~ 60 PSIG 2 = 1 ~ 100 PSIG 3 = 1 ~ 150 PSIG
9 Maximum Range of Outlet Gauge	0 = 30 PSIG 1 = 60 PSIG 2 = 100 PSIG 3 = 150 PSIG 4 = 200 PSIG Blank = No Gauge
10 User Option	Customization
11 Grade	Blank = BA Standard (10 Ra µinch) P = Electropolishing (5 Ra µinch)

PORT CONFIGURATION

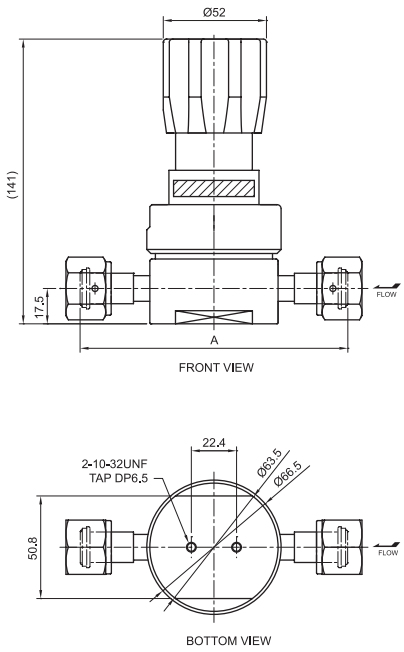

Inlet / Outlet		
Size	Connection	A
1/2"	VF	132.6
1/2"	NF	63.5
1/2"	NSW	114.2

Port Configurations

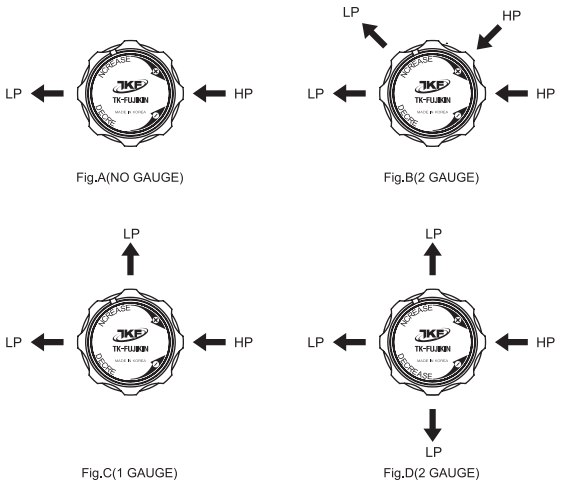

RG3 SERIES

TIED DIAPHRAGM TYPE REGULATOR

- Internal springless and added internal mesh are designed to minimize particle entrapment areas.
- Designed for point-of-use midium flow to be used in process gas cabinets for gas companies, equipment manufactures and semiconductor manufacturers.
- All internal surfaces are finished with 10Ra or 5Ra to ensure minimal particle generation and entrapment. Metal-to-metal diaphragm seals provide enhanced leak tight integrity.
- Every step of assembly, welding, testing and final cleaning finished in Class 100 cleanrooms.

SPECIFICATIONS

Fluid Media		
All gases corrosive or non-corrosive or those requiring high purity regulation compatible with materials of construction. For other media, consult with factory.		
Pressure Rating		**Per criteria of ANSI / ASME B31.3.**
Max. rated inlet pressure		3500 or 600 PSIG (241 or 41 bar)
Outlet pressure ranges		1-30, 1-60, 1-100, 1-150 or 1-250 psig (.1-2.1, .1-4.1, .1-6.9, .1-10.3 or .1-17.2 bar)
Design proof pressure		150% of Maximum rated pressure
Materials in Contact with Media		
Body		316L Stainless Steel with BA, Electropolish
Seat		3500 PSIG - PCTFE / 600 PSIG - PFA
Diaphragm		Hastelloy C-22
Gas contact parts		316L Stainless Steel / Hastelloy C-22
Other Parameters		
Flow coefficient		Cv = 0.2
Certified maximum inboard leak rate		1 x 10^{-9} atm cc / sec He
Internal surface finish		10Ra or 5Ra microinch (.25 or .13 micrometer)
Operating temperature	PCTFE seat	-15°F to +140°F (-26°C to +60°C)
	PFA seat	-15°F to +160°F (-26°C to +71°C)
Weight (w/o gauges)		2.2lbs. (1.0kg)

FLOW CURVES

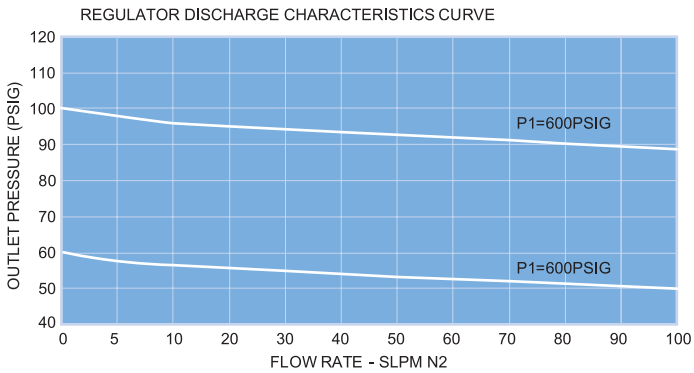

MATERIAL

Wetted Parts	RG3 Series
Body	316L Stainless Steel
Main Valve	316L Stainless Steel Hastelloy C-22
Seat	PCTFE (Option : PI)
Diaphragm	Hastelloy C-22

ORDERING INFORMATION

S	4	RG3	–	VF	–	1	3	C	2	3	–	X123	–	P
1	2	3		4		5	6	7	8	9		10		11

1 Material	S = 316L Stainless steel	SH = 316L Stainless steel with Hastelloy internals DH = 316L Stainless steel VAR with Hastelloy internals
2 Connection Size	4 = 1/4"	
3 Product	RG3 Series	
4 Connection Type	NF = Female NPT Thread VF = Female Type Face Seal SW = Compression Lok Fitting	VM = Male Type Face Seal TW = Tube Butt Weld VMF = Fixed Male Type Face Seal
5 Maximum Inlet Pressure	1 = 3500 PSIG	2 = 600 PSIG
6 Maximum Range of Inlet Gauge	1 = 600 PSIG 2 = 1000 PSIG 3 = 3500 PSIG	4 = 4000 PSIG Blank = No Gauge
7 Gauge Port Configuration	A = No Gauge Port (Fig. A) B = 1/4" Internal Face Seal (Fig. C) C = 1/4" Internal Face Seal (Fig. B) D = 1/4" Internal Face Seal (Fig. D) E = 1/4" Male Face Seal (Fig. D) F = 1/4" Male Face Seal (Fig. C) H = 1/4" Female Face Seal (Fig. D)	I = 1/4" Female Face Seal (Fig. C) L = 1/4" Fixed Male Face Seal (Fig. C) M = 1/4" Fixed Male Face Seal (Fig. D) N = 1/4" Female NPT Thread (Fig.B) O = 1/4" Female NPT Thread (Fig.C) P = 1/4" Female NPT Thread (Fig.D)
8 Outlet Pressure Range	0 = 1 ~ 30 PSIG 1 = 1 ~ 60 PSIG 2 = 1 ~ 100 PSIG	3 = 1 ~ 150 PSIG 4 = 1~ 250 PSIG
9 Maximum Range of Outlet Gauge	0 = 30 PSIG 1 = 60 PSIG 2 = 100 PSIG 3 = 160 PSIG	4 = 200 PSIG 5 = 300 PSIG Blank = No Gauge
10 User Option	Customization (※Standard : Blank)	
11 Grade	Blank = BA Standard (10 Ra µinch) P = Electropolishing (5 Ra µinch) PX = Electropolishing (5 Ra µinch)	

PORT CONFIGURATION

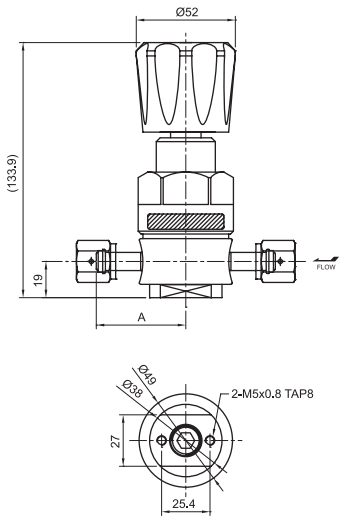

Inlet / Outlet		
Size	Connection	A±0.5
1/4"	VF	47
1/4"	VM	57/47(-X84)
1/4"	SW	47.5
1/4"	TW	38
1/4"	NF	24.5
1/4"	VM X VF	47

Port Configurations

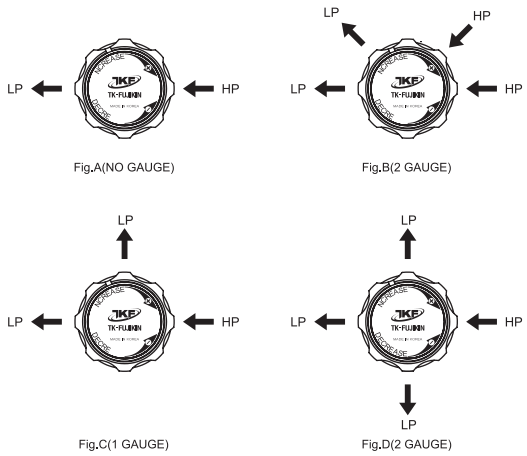

RG4 SERIES

TIED DIAPHRAGM TYPE REGULATOR

- Internal springless and added internal mesh are designed to minimize particle entrapment areas.
- Designed for point-of-use midium flow to be used in process gas cabinets for gas companies, equipment manufactures and semiconductor manufacturers.
- All internal surfaces are finished with 10Ra or 5Ra to ensure minimal particle generation and entrapment. Metal-to-metal diaphragm seals provide enhanced leak tight integrity.
- Every step of assembly, welding, testing and final cleaning finished in Class 100 cleanrooms.

SPECIFICATIONS

Fluid Media		
All gases corrosive or non-corrosive or those requiring high purity regulation compatible with materials of construction. For other media, consult with factory.		
Pressure Rating		**Per criteria of ANSI / ASME B31.3.**
Max. rated inlet pressure		3500 or 1000, 600 PSIG (241 or 69, 41 bar)
Outlet pressure ranges		1-30, 1-60, 1-100, 1-150 psig (.1-2.1, .1-4.1, .1-6.9, .1-10.3 bar)
Design proof pressure		150% of Maximum rated pressure
Materials in Contact with Media		
Body		316L Stainless Steel with BA, Electropolish
Seat		3500 PSIG - PI / 1000 PSIG - PCTFE / 600 PSIG - PFA
Diaphragm		Hastelloy C-22
Gas contact parts		316L Stainless Steel / Hastelloy C-22
Other Parameters		
Flow coefficient		Cv = 0.5
Certified maximum inboard leak rate		1 X 10^{-9} atm cc / sec He
Internal surface finish		10Ra or 5Ra microinch (.25 or .13 micrometer)
Operating temperature	PCTFE seat	-15°F to +140°F (-26°C to +60°C)
	PFA seat	-15°F to +160°F (-26°C to +71°C)
	PI seat	-15°F to +300°F (-26°C to +149°C)
Weight (w/o gauges)		301lbs. (1.4kg)

FLOW CURVES

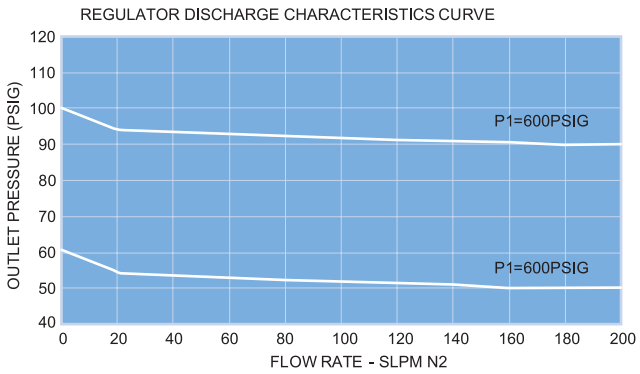

MATERIAL

Wetted Parts	RG4 Series
Body	316L Stainless Steel
Main Valve	316L Stainless Steel Hastelloy C-22
Seat	PFA PCTFE PI
Diaphragm	Hastelloy C-22

ORDERING INFORMATION

S	8	RG4	–	VF	–	1	3	C	2	3	–	X123	–	P
1	2	3		4		5	6	7	8	9		10		11

1 Material	S = 316L Stainless steel D = 316L Stainless Steel VAR	SH = 316L Stainless steel with Hastelloy internals DH = 316L Stainless steel VAR with Hastelloy internals
2 Connection Size	6 = 3/8"	8 = 1/2"
3 Product	RG4 Series	
4 Connection Type	NF = Female NPT Thread VF = Female Type Face Seal SW = Compression Lok Fitting	VM = Male Type Face Seal TW = Tube Butt Weld
5 Maximum Inlet Pressure	1 = 3500 PSIG 2 = 1000 PSIG	3 = 600 PSIG
6 Maximum Range of Inlet Gauge	1 = 600 PSIG 2 = 1000 PSIG 3 = 3500 PSIG	4 = 4000 PSIG Blank = No Gauge
7 Gauge Port Configuration	A = No Gauge Port (Fig. A) B = 1/4" Internal Face Seal (Fig. C) C = 1/4" Internal Face Seal (Fig. B) D = 1/4" Internal Face Seal (Fig. D) E = 1/4" Male Face Seal (Fig. D) F = 1/4" Male Face Seal (Fig. C) H = 1/4" Female Face Seal (Fig. D)	I = 1/4" Female Face Seal (Fig. C) L = 1/4" Fixed Male Face Seal (Fig. C) M = 1/4" Fixed Male Face Seal (Fig. D) N = 1/4" Female NPT Thread (Fig.B) O = 1/4" Female NPT Thread (Fig.C) P = 1/4" Female NPT Thread (Fig.D)
8 Outlet Pressure Range	0 = 1 ~ 30 PSIG 1 = 1 ~ 60 PSIG	2 = 1 ~ 100 PSIG 3 = 1 ~ 150 PSIG
9 Maximum Range of Outlet Gauge	0 = 30 PSIG 1 = 60 PSIG 2 = 100 PSIG	3 = 160 PSIG 4 = 200 PSIG Blank = No Gauge
10 User Option	Customization (※Standard : Blank)	
11 Grade	Blank = BA Standard (10 Ra µinch) P = Electropolishing (5 Ra µinch) PX = Electropolishing (5 Ra µinch)	

PORT CONFIGURATION

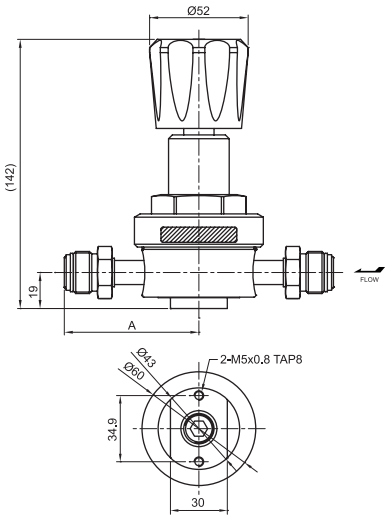

Inlet / Outlet		
Size	Connection	A±0.5
3/8"	SW	58.2
1/2"	VF	71
1/2"	VM	71
1/2"	SW	58.2
1/2"	TW	47
1/2"	NF	30

Port Configurations

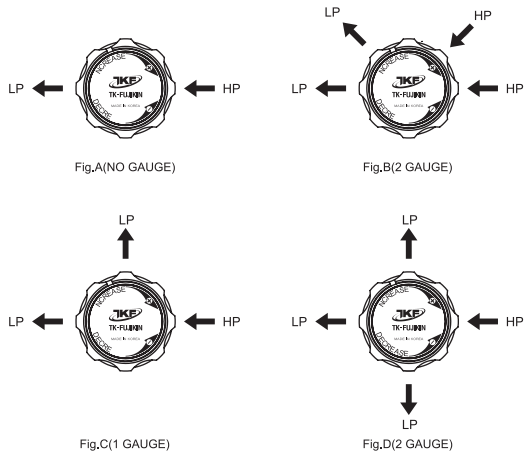

PRG1 SERIES (TIED DIAPHRAGM)

POSITIVE SHUTOFF SEAL REGULATOR

- No internal springs and threadless design to minimize particle entrapment areas.
- Positive shutoff seal reduces pressure creep.
- Metal to metal diaphragm seal enhances leak tight integrity.
- All internal surfaces are finished with 10Ra or 5Ra to ensure minimal particle generation and entrapment. Metal-to-metal diaphragm seals provide enhanced leak tight integrity.
- Every step of assembly, welding, testing and final cleaning finished in Class 100 Cleanrooms.

SPECIFICATIONS

Pressure Rating		
Max. rated inlet pressure		600, 1000, 3500 PSIG
Outlet pressure ranges		1-30, 1-60, 1-100 or 1-150 PSIG
Design proof pressure		150% of Maximum rated pressure
Materials in Contact with Media		
Body		316L Stainless Steel / Hastelloy C-22
Seat		PCTFE (PI optional for 3,500 PSIG model only)
Diaphragm		Hastelloy C-22
Gas contact parts		316L Stainless Steel / Hastelloy C-22
Other Parameters		
Flow coefficient		3500 PSIG Inlet : Cv = 0.06 600, 1000 PSIG Inlet : Cv = 0.15
Operating temperature	PCTFE seat	-40°F to +65°C
	PI seat	-26°F to +149°C
Inboard leak rate		1 x 10^{-9} atm cc / sec He
Weight (w/o gauges)		2.0lbs. (0.9kg)

FLOW CURVES

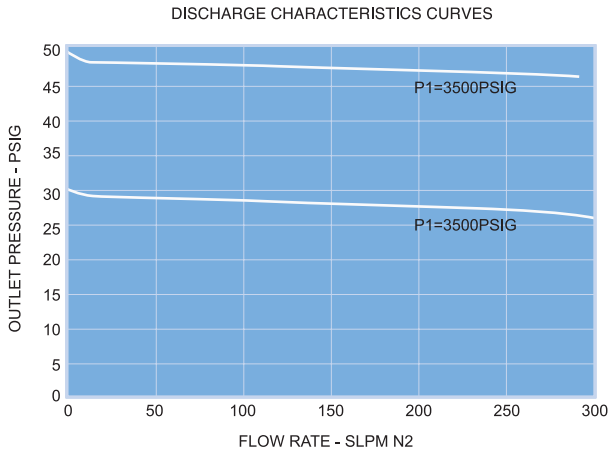

MATERIAL

Wetted Parts	PRG1 Series
Body	316L Stainless Steel
Main Valve	316L Stainless Steel Hastelloy C-22
Seat	PCTFE (Option : PI)
Diaphragm	Hastelloy C-22

ORDERING INFORMATION

S	4	PRG1	–	VM	–	1	1	C	1	2	–	X-NO.	–	P
1	2	3		4		5	6	7	8	9		10		11

1 Material	S = 316L Stainless steel	SH = 316L Stainless steel with Hastelloy internals DH = 316L Stainless steel VAR with Hastelloy internals
2 Connection Size	4 = 1/4" 6 = 3/8"	8 = 1/2"
3 Product	PRG1 Series	
4 Connection Type	NF = Female NPT Thread TW = Tube Butt Weld	VF = Female Type Face Seal VM = Male Type Face Seal
5 Maximum Inlet Pressure	1 = 3500 PSIG 2 = 1000 PSIG	3 = 600 PSIG
6 Maximum Range of Inlet Gauge	1 = 600 PSIG 2 = 1000 PSIG	3 = 3500 PSIG Blank = No Gauge
7 Gauge Port Configuration	A = No Gauge Port (Fig. A) B = 1/4" Internal Face Seal (Fig. C) C = 1/4" Internal Face Seal (Fig. B) D = 1/4" Internal Face Seal (Fig. D) E = 1/4" Male Face Seal (Fig. D) F = 1/4" Male Face Seal (Fig. C) G = 1/4" Male Face Seal (Fig. B) H = 1/4" Female Face Seal (Fig. D)	I = 1/4" Female Face Seal (Fig. C) J = 1/4" Female Face Seal (Fig. B) K = 1/4" Fixed Male Face Seal (Fig. B) L = 1/4" Fixed Male Face Seal (Fig. C) M = 1/4" Fixed Male Face Seal (Fig. D) N = 1/4" Female NPT Thread (Fig.B) O = 1/4" Female NPT Thread (Fig.C) P = 1/4" Female NPT Thread (Fig.D)
8 Outlet Pressure Range	0 = 1 ~ 30 PSIG 1 = 1 ~ 60 PSIG	2 = 1 ~ 100 PSIG 3 = 1 ~ 150 PSIG
9 Maximum Range of Outlet Gauge	0 = 30 PSIG 1 = 60 PSIG 2 = 100 PSIG	3 = 160 PSIG Blank = No Gauge
10 User Option	Customization (※Standard : Blank)	
11 Grade	Blank = BA Standard (10 Ra µinch) P = Electropolishing (5 Ra µinch) PX = Electropolishing (5 Ra µinch)	

GAUGE PORT INFORMAITON

1/4" INTERNAL FACE SEAL

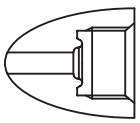

1/4" FEMALE NPT THREAD

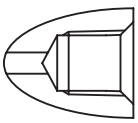

1/4" MALE FACE SEAL

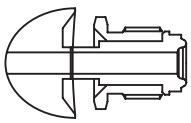

1/4" FEMALE FACE SEAL

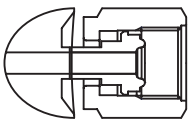

1/4" FIXED MALE FACE SEAL

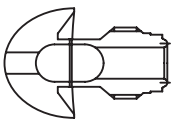

PORT CONFIGURATION

Major Configuration

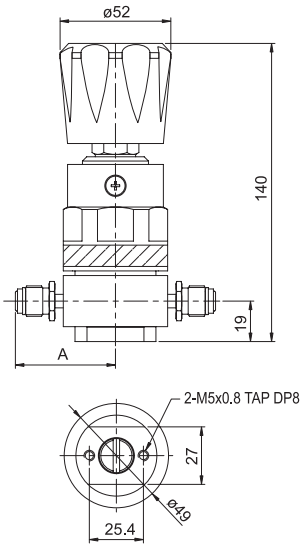

Inlet / Outlet		
Size	Connection	A±0.5
1/4"	VF	47
1/4"	VM	47
1/4"	TW	38

Port Configurations

Fig.A (NO GAUGE)

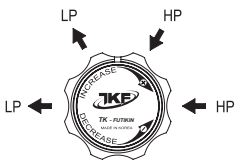

Fig.B (2 GAUGE)

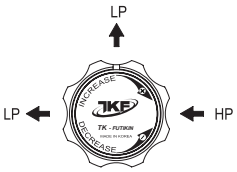

Fig.C (1 GAUGE)

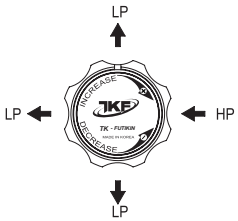

Fig.D (2 GAUGE)

TRG SERIES

ULTRA HIGH PURITY REGULATOR

- Designed for point-of-use medium flow to be used in process gas cabinets for gas companies, equipment manufactures and semiconductor manufacturers.
- All internal surfaces are finished with 10Ra or 5Ra to ensure minimal particle generation and entrapment.
- Metal-to-metal diaphragm seals provide enhanced leak tight integrity.
- Every step of assembly, welding, testing and final cleaning finished in Class 100 Cleanrooms.

SPECIFICATIONS

Fluid Media	
All gases corrosive or non-corrosive or those requiring high purity regulation compatible with materials of construction. For other media, consult with factory.	
Per criteria of ANSI / ASME B31.3.	
Max. rated inlet pressure	3500 PSIG (241bar)
Outlet pressure ranges	1-30, 1-60, 1-100, 1-150 PSIG (0.1, 2.1, 0.1- 4.1, 0.1- 6.9, 0.1-10.3 bar)
Design proof pressure	150% of Maximum rated pressure
Materials in Contact with Media	
Body	316L Stainless Steel with BA, Electropolish
Seat	PCTFE
Diaphragm	Hastelloy C-22
Gas contact parts	316L Stainless Steel / Hastelloy C-22 / Inconel 750
Other Parameters	
Flow coefficient	Cv=0.06
Certified maximum inboard leak rate	1 x 10^{-9} atm cc / sec He
Internal surface finish	10Ra or 5Ra microinch (.25 or .13 micrometer)
Operating temperature PCTFE seat	-15°F to +176°F (-26°C to +80°C)
Weight (w/o gauges)	3.5 lbs. (1.6kg)

FLOW CURVES

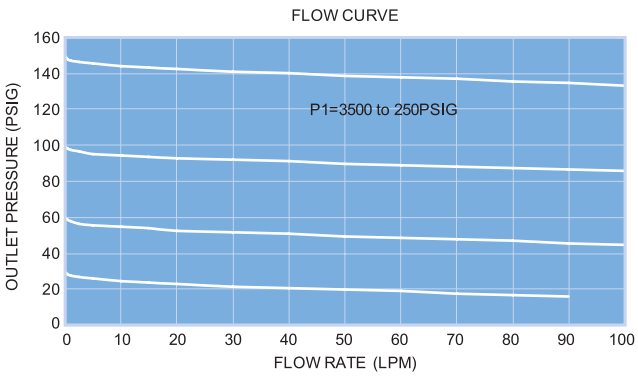

MATERIAL

Wetted Parts	RG1 Series
Body	316L Stainless Steel
Seat Holder	316L Stainless Steel Hastelloy C-22
Main Valve	316L Stainless Steel Hastelloy C-22
Valve Spring	316 Stainless Steel Inconel 750
Valve Bush	316L Stainless Steel Hastelloy C-22
Seat	PCTFE (Option : PI)
Diaphragm	Hastelloy C-22

ORDERING INFORMATION

S	4	TRG	–	VF	–	1	1	C	2	3	–	X-NO.	–	P
1	2	3		4		5	6	7	8	9		10		11

1 Material	S = 316L Stainless steel SH = 316L Stainless steel with Hastelloy internals DH = 316L Stainless steel VAR with Hastelloy internals
2 Connection Size	4 = 1/4"
3 Product	TRG Series
4 Connection Type	VF = Female Type Face Seal TW = Tube Butt Weld VM = Male Type Face Seal VF x VM = Female Type Face Seal x Male Type Face Seal
5 Maximum Inlet Pressure	1 = 3500 PSIG
6 Maximum Range of Inlet Gauge	1 = 4000 PSIG Blank = No Gauge
7 Gauge Port Configuration	A = No Gauge Port (Fig. A) B = 1/4" Internal Face Seal (Fig. C) C = 1/4" Internal Face Seal (Fig. B) D = 1/4" Internal Face Seal (Fig. D) E = 1/4" Male Face Seal (Fig. D) F = 1/4" Male Face Seal (Fig. C) G = 1/4" Male Face Seal (Fig. B) I = 1/4" Female Face Seal (Fig. C) J = 1/4" Female Face Seal (Fig. B) K = 1/4" Fixed Male Face Seal (Fig. B) L = 1/4" Fixed Male Face Seal (Fig. C) M = 1/4" Fixed Male Face Seal (Fig. D) N = 1/4" Female NPT Thread (Fig.B)
8 Outlet Pressure Range	0 = 1 ~ 30 PSIG 1 = 1 ~ 60 PSIG 2 = 1 ~ 100 PSIG 3 = 1 ~ 150 PSIG
9 Maximum Range of Outlet Gauge	0 = 30 PSIG 1 = 60 PSIG 2 = 100 PSIG 3 = 150 PSIG 4 = 200 PSIG Blank = No Gauge
10 User Option	Customization (※Standard : Blank)
11 Grade	Blank = BA Standard (10 Ra µinch) P (PX) = Electropolishing (5 Ra µinch)

PORT CONFIGURATION

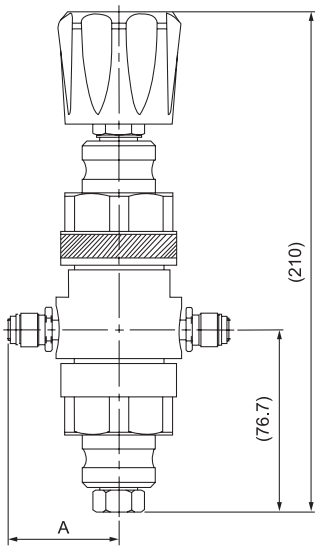

Inlet / Outlet		
Size	Connection	A±0.5
1/4"	VF	47
1/4"	VM	47
1/4"	TW	38.1
1/4"	VF X VM	47

Port Configurations

Fig.A(NO GAUGE)

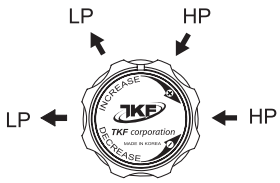

Fig.B(2 GAUGE)

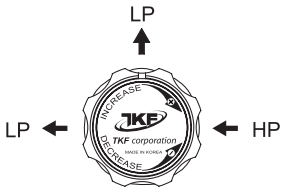

Fig.C(1 GAUGE)

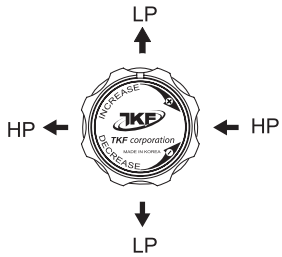

Fig.D(4 GAUGE)

BRG3 SERIES

MIRCRO BLOCK REGULATOR

- Compact size
- High performance with low hysteresis.
- All internal surfaces are finished with 10Ra or 5Ra to ensure minimal particle generation and entrapment. Metal-to-metal diaphragm seals provide enhanced leak tight integrity.
- Every step of assembly, welding, testing and final cleaning finished in Class 100 Cleanrooms.

SPECIFICATIONS

Pressure Rating	Per criteria of ANSI / ASME B31.3.
Max. rated inlet pressure	150 PSIG
Outlet pressure	1-30, 1-60, 1-100 PSIG
Design proof pressure	150% of Maximum rated pressure
Materials in Contact with Media	
Body	316L Stainless Steel
Seat	PCTFE
Diaphragm	Hastelloy C-22
Gas contact parts	316L Stainless Steel / Hastelloy C-22 / Inconel 750
Other Parameters	
Flow coefficient	Cv = 0.06 (1/8" Connection & Bellow 30psi : Cv = 0.04)
PCTFE seat	-40°C to +71°C
Inboard leak rate	1 x 10^{-9} atm cc / sec He
Weight (w/o gauges)	1.2lbs. (530kg)

FLOW CURVES

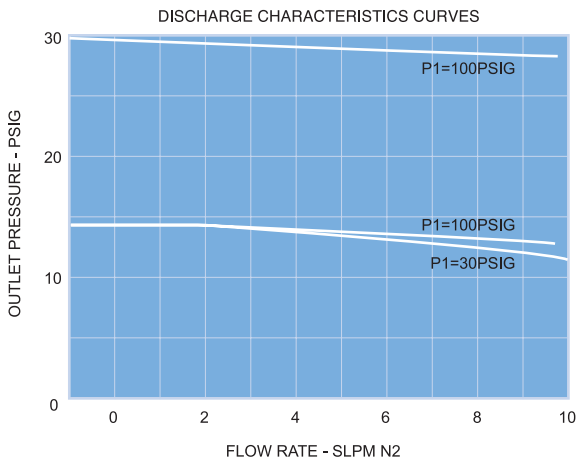

MATERIAL

Wetted Parts	BRG3 Series
Body	316L Stainless Steel
Seat Holder	316L Stainless Steel Hastelloy C-22
Main Valve	316L Stainless Steel Hastelloy C-22
Valve Spring	316 Stainless Steel Inconel 750
Seat	PCTFE
Diaphragm	Hastelloy C-22

ORDERING INFORMATION

S	4	BRG3	–	VM	–	1	B	1	2	–	X-NO.	–	P
1	2	3		4		5	6	7	8		9		10

1 Material	S = 316L Stainless steel SH = 316L Stainless steel with Hastelloy internals DH = 316L Stainless steel VAR with Hastelloy internals
2 Connection Size	4 = 1/4" 6= 3/8"
3 Product	BRG3 Series
4 Connection Type	TW = Tube Butt Weld VF = Female Type Face Seal VM = Male Type Face Seal VMF = Fixed Male Type Face Seal
5 Maximum Inlet Pressure	1 = 150 PSIG
6 Gauge Port Configuration	A = No Gauge Port B = 1/4" Internal Face Seal C = 1/4" Male Face Seal D = 1/4" Female Face Seal E = 1/4" Fixed Male Face Seal
7 Outlet Pressure Range	0 = 1 ~ 30 PSIG 1 = 1 ~ 60 PSIG 2 = 1 ~ 100 PSIG
8 Maximum Range of Outlet Gauge	0 = 30 PSIG 1 = 60 PSIG 2 = 100 PSIG Blank = No Gauge
9 User Option	Customization (※Standard : Blank)
10 Grade	Blank = BA Standard (10 Ra µinch) P = Electropolishing (5 Ra µinch) PX = Electropolishing (5 Ra µinch)

GAUGE PORT INFORMAITON

1/4" INTERNAL FACE SEAL

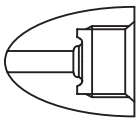

1/4" MALE FACE SEAL

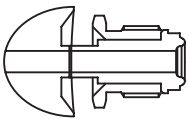

1/4" FEMALE FACE SEAL

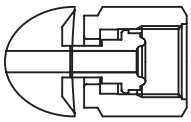

1/4" FIXED MALE FACE SEAL

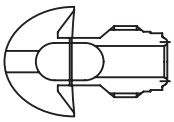

PORT CONFIGURATION

Major Configuration

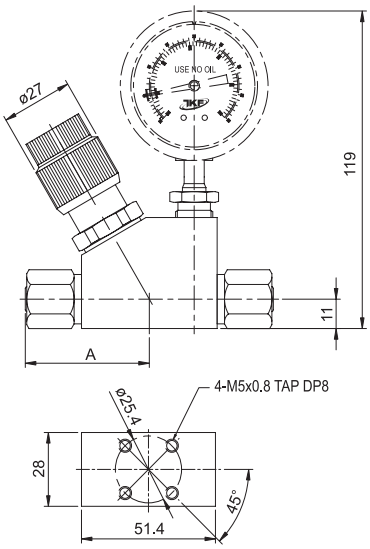

Inlet / Outlet		
Size	Connection	A±0.5
1/4"	VF	47
1/4"	VM	47

MRG3 SERIES

MIRCRO REGULATOR

- Compact size
- High performance with low hysteresis.
- All internal surfaces are finished with 10Ra or 5Ra to ensure minimal particle generation and entrapment. Metal-to-metal diaphragm seals provide enhanced leak tight integrity.
- Every step of assembly, welding, testing and final cleaning finished in Class 100 Cleanrooms.

SPECIFICATIONS

Pressure Rating	
Max. rated inlet pressure	150 PSIG
Outlet pressure	1-30, 1-60, 1-100 PSIG
Design proof pressure	150% of Maximum rated pressure
Materials in Contact with Media	
Body	316L Stainless Steel
Seat	PCTFE
Diaphragm	Hastelloy C-22
Gas contact parts	316L Stainless Steel / Hastelloy C-22 / Inconel 750
Other Parameters	
Flow coefficient	Cv = 0.06 (1/8" Connection & Bellow 30psi : Cv = 0.04)
Temperature	-40°C to +71°C
Inboard leak rate	1 x 10^{-9} atm cc / sec He
Weight (w/o gauges)	0.82lbs. (370g)

FLOW CURVES

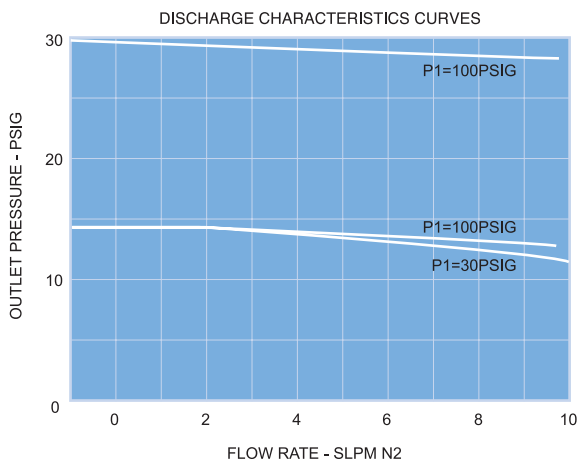

MATERIAL

Wetted Parts	MRG3 Series
Body	316L Stainless Steel
Seat Holder	316L Stainless Steel Hastelloy C-22
Main Valve	316L Stainless Steel Hastelloy C-22
Valve Spring	316 Stainless Steel Inconel 750
Seat	PCTFE
Diaphragm	Hastelloy C-22

ORDERING INFORMATION

S	4	MRG3	–	VM	–	1	B	1	2	–	X-NO.	–	P
1	2	3		4		5	6	7	8		9		10

1 Material	S = 316L Stainless steel SH = 316L Stainless steel with Hastelloy internals DH = 316L Stainless steel VAR with Hastelloy internals
2 Connection Size	4 = 1/4" 6= 3/8"
3 Product	MRG3 Series
4 Connection Type	TW = Tube Butt Weld VF = Female Type Face Seal VM = Male Type Face Seal VMF = Fixed Male Type Face Seal
5 Maximum Inlet Pressure	1 = 150 PSIG
6 Gauge Port Configuration	A = No Gauge Port (Fig. A) B = 1/4" Male Face Seal (Fig. B) C = 1/4" Female Face Seal (Fig. B) D = 1/4" Fixed Male Face Seal (Fig. B)
7 Outlet Pressure Range	0 = 1 ~ 30 PSIG 1 = 1 ~ 60 PSIG 2 = 1 ~ 100 PSIG
8 Maximum Range of Outlet Gauge	0 = 30 PSIG 1 = 60 PSIG 2 = 100 PSIG Blank = No Gauge
9 User Option	Customization (※Standard : Blank)
10 Grade	Blank = BA Standard (10 Ra µinch) P = Electropolishing (5 Ra µinch) PX = Electropolishing (5 Ra µinch)

GAUGE PORT INFORMAITON

1/4" MALE FACE SEAL

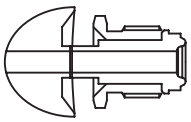

1/4" FEMALE FACE SEAL

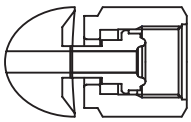

1/4" FIXED MALE FACE SEAL

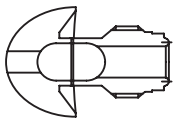

PORT CONFIGURATION

Major Configuration

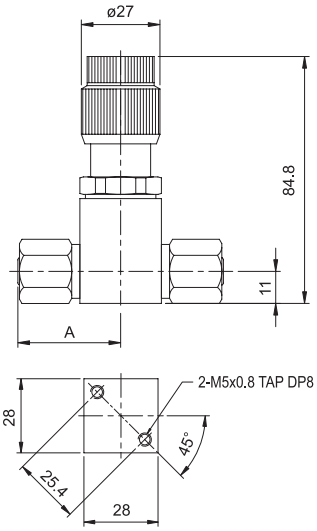

Inlet / Outlet		
Size	Connection	A±0.5
1/4"	VF	35.3
1/4"	VM	35.3
1/4"	SW	35.7

Port Configurations

Fig.A (NO GAUGE)

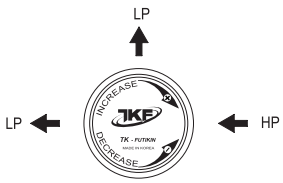

Fig.B (1 GAUGE)

MRG4 SERIES

MIRCRO REGULATOR

- Compact size
- High performance with low hysteresis.
- All internal surfaces are finished with 10Ra or 5Ra to ensure minimal particle generation and entrapment. Metal-to-metal diaphragm seals provide enhanced leak tight integrity.
- Every step of assembly, welding, testing and final cleaning finished in Class 100 Cleanrooms.

SPECIFICATIONS

Pressure Rating	
Max. rated inlet pressure	150 PSIG
Outlet pressure	3-30, 3-60, 3-100 PSIG
Design proof pressure	150% of Maximum rated pressure
Materials in Contact with Media	
Body	316L Stainless Steel with BA, Electropolish
Seat	PCTFE
Diaphragm	Hastelloy C-22
Gas contact parts	316L Stainless Steel / Hastelloy C-22 / Inconel 750
Other Parameters	
Flow coefficient	Cv = 0.08
Temperature	-40°C to +71°C
Inboard leak rate	1 x 10^{-9} atm cc / sec He

FLOW CURVES

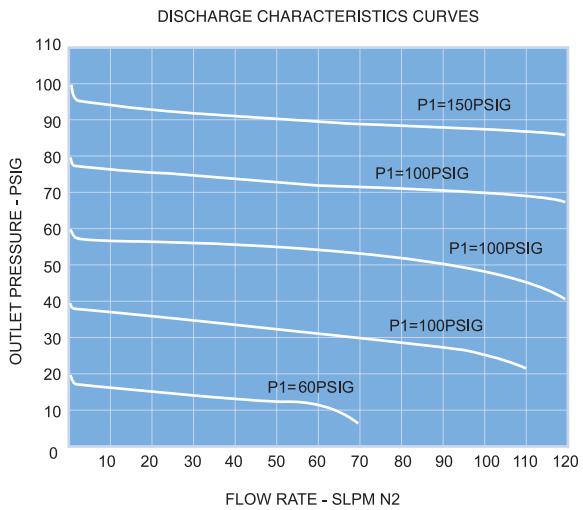

MATERIAL

Wetted Parts	MRG4 Series
Body	316L Stainless Steel
Seat Holder	316L Stainless Steel Hastelloy
Main Valve	316L Stainless Steel Hastelloy
Valve Spring	316 Stainless Steel Inconel 750
Seat	PCTFE
Diaphragm	Hastelloy C-22

ORDERING INFORMATION

DH	4	MRG4	–	VF	–	1A1	–	X-NO.	–	PX
1	2	3		4		5		6		7

1 Material	S = 316L Stainless steel SH = 316L Stainless steel with Hastelloy internals HH = Hastelloy DH = 316L Stainless steel VAR with Hastelloy internals
2 Size	4 = 1/4" 11 = 1.125" 15 = 1.5"
3 Product	MRG4 Series
4 Connection Type	VM = Male Type Face Seal VF = Female Type Face Seal TW = Tube Butt Weld 2W = W-Seal 2C = C-Seal
5 Outlet Pressure Range	1A0 = 3-30PSIG 1A1 = 3-60PSIG 1A2 = 3-100PSIG
6 User Option	Customization (※Standard : Blank)
7 Grade	Blank = BA Standard (10 Ra µinch) P = Electropolishing (5 Ra µinch) PX = Electropolishing (5 Ra µinch)

PORT CONFIGURATION

Major Configuration

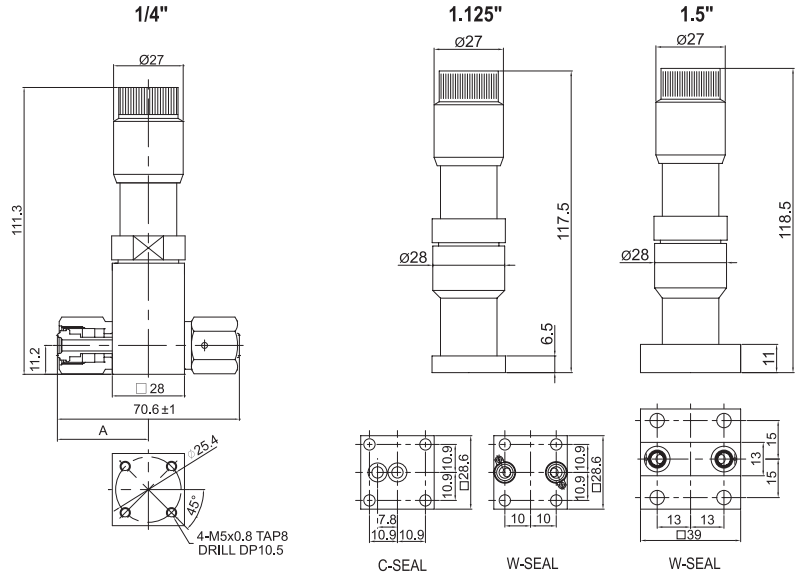

Inlet / Outlet		
Size	Connection	A±0.5
1/4"	VF	35.3
1/4"	VM	35.3
1/4"	TW	35.3

MRG6 SERIES

MIRCRO REGULATOR

- Compact size
- High performance with low hysteresis.
- All internal surfaces are finished with 10Ra or 5Ra to ensure minimal particle generation and entrapment. Metal-to-metal diaphragm seals provide enhanced leak tight integrity.
- Every step of assembly, welding, testing and final cleaning finished in Class 100 Cleanrooms.
- No spring or threads are exposed to the wetted area.

SPECIFICATIONS

Fluid Media	
All gases corrosive or non-corrosive or those requiring high purity regulation compatible with materials of construction. For other media, consult with factory.	
Pressure Rating	**Per criteria of ANSI / ASME B31.3.**
Max. rated inlet pressure	150 PSIG
Outlet pressure	-10-30, -10-60, -10-100 PSIG
Design proof pressure	150% of Maximum rated pressure
Materials in Contact with Media	
Body	316L Stainless Steel with BA, Electropolish
Seat	PFA
Diaphragm	Hastelloy C-22
Gas contact parts	316L Stainless Steel / Hastelloy C-22
Other Parameters	
Flow coefficient	Cv = 0.08
Certified maximum inboard leak rate	1 x 10^{-9} atm cc / sec He
Internal surface finish	10Ra or 5Ra microinch (.25 or .13 micrometer)
Operating temperature PCTFE seat	-40°F to +160°F (-40°C to +71°C)
Weight (w/o gauges)	0.54lbs. (244g)

FLOW CURVES

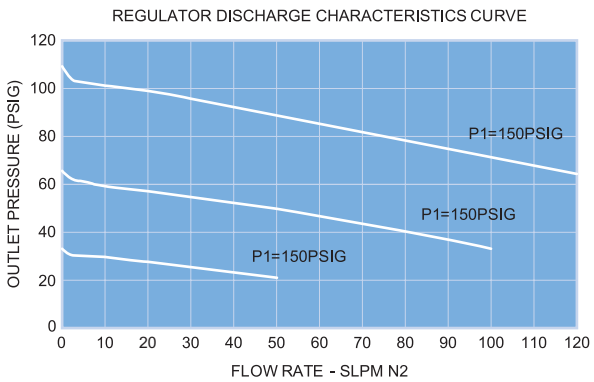

MATERIAL

Wetted Parts	MRG6 Series
Body	316L Stainless Steel
Seat Holder	316L Stainless Steel Hastelloy
Main Valve	316L Stainless Steel Hastelloy
Valve Spring	316 Stainless Steel Inconel 750
Seat	PCTFE
Diaphragm	Hastelloy C-22

ORDERING INFORMATION

DH	4	MRG6	–	VF	–	1	A	1	–	X-NO.	–	PX
1	2	3		4			5			6		7

1 Material	S = 316L Stainless steel HH = Hastelloy DH = 316L Stainless steel VAR with Hastelloy internals
2 Size	4 = 1/4" 11 = 1.125" 15 = 1.5"
3 Product	MRG6 Series
4 Connection Type	VM = Male Type Face Seal VF = Female Type Face Seal TW = Tube Butt Weld 2W = W-Seal 2C = C-Seal
5 Outlet Pressure Range	1A0 = 10- 30PSIG 1A1 = 10- 60PSIG 1A2 = 10-100PSIG
6 User Option	Customization
7 Grade	Blank = BA Standard (10 Ra µinch) P = Electropolishing (5 Ra µinch) PX = Electropolishing (5 Ra µinch)

PORT CONFIGURATION

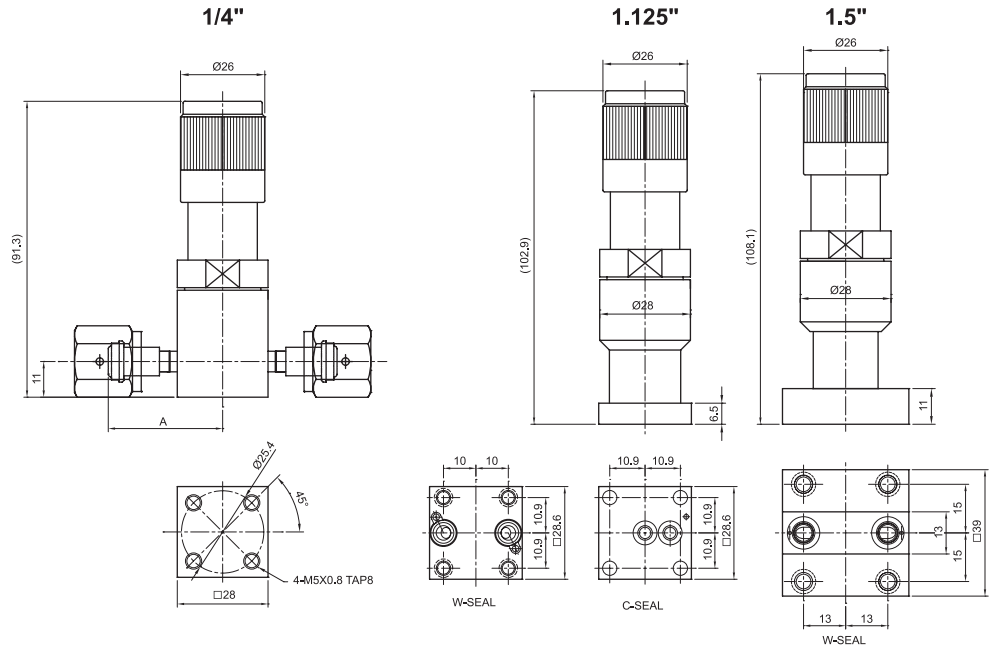

Inlet / Outlet		
Size	Connection	A±0.5
1/4"	VF	35.3
	VM	
	TW	

MRG5 SERIES

MIRCRO REGULATOR

- Compact size
- High performance with low hysteresis.
- All internal surfaces are finished with 10Ra or 5Ra to ensure minimal particle generation and entrapment. Metal-to-metal diaphragm seals provide enhanced leak tight integrity.
- Every step of assembly, welding, testing and final cleaning finished in Class 100 Cleanrooms.

SPECIFICATIONS

Pressure Rating	
Max. rated inlet pressure	500 PSIG
Outlet pressure	1-30, 1-60, 1-100 PSIG
Design proof pressure	150% of Maximum rated pressure
Materials in Contact with Media	
Body	316L Stainless Steel
Seat	PCTFE
Diaphragm	Hastelloy C-22
Gas contact parts	316L Stainless Steel / Hastelloy C-22
Other Parameters	
Flow coefficient	Cv = 0.1
Temperature	-40°C to +71°C
Inboard leak rate	1 x 10^{-9} atm cc / sec He
Weight (w/o gauges)	0.82lbs. (370g)

FLOW CURVES

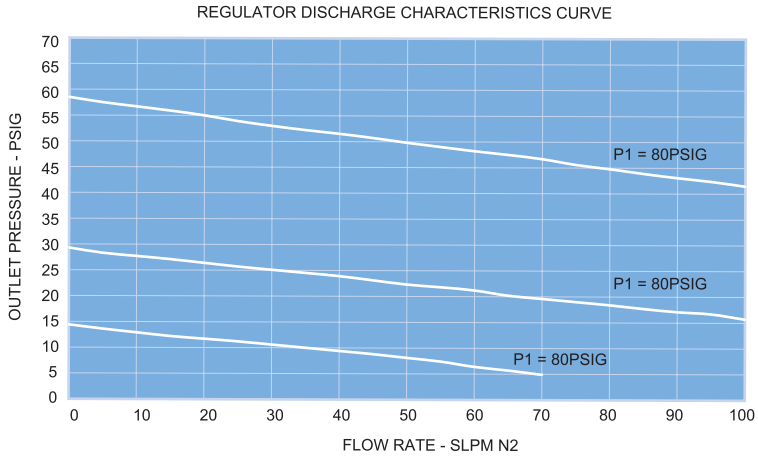

MATERIAL

Wetted Parts	MRG5 Series
Body	316L Stainless Steel
Seat Holder	316L Stainless Steel Hastelloy C-22
Main Valve	316L Stainless Steel Hastelloy C-22
Valve Spring	316 Stainless Steel Inconel 750
Seat	PCTFE
Diaphragm	Hastelloy C-22

ORDERING INFORMATION

S	4	MRG5	–	VM	–	1	F	1	2	–	X-NO.	–	P
1	2	3		4		5	6	7	8		9		10

1 Material	S = 316L Stainless steel	SH = 316L Stainless steel with Hastelloy internals DH = 316L Stainless steel VAR with Hastelloy internals
2 Connection Size	4 = 1/4"	
3 Product	MRG5 Series	
4 Connection Type	TW = Tube Butt Weld VF = Female Type Face Seal VM = Male Type Face Seal VMF = Fixed Male Type Face Seal	
5 Maximum Inlet Pressure	1 = 500 PSIG	
6 Gauge Port Configuration	A = No Gauge Port (Fig. A) B = 1/4" Male Face Seal (Fig. B) C = 1/4" Female Face Seal (Fig. B) D = 1/4" Fixed Male Face Seal (Fig. B) E = 1/4" Internal Face Seal (Fig. C) F = 1/4" Male Face Seal (Fig. C) G = 1/4" Female Face Seal (Fig. C) H = 1/4" Fixed Male Face Seal (Fig. C)	
7 Outlet Pressure Range	0 = 1~ 30 PSIG 1 = 1~ 60 PSIG 2 = 1~100 PSIG	
8 Maximum Range of Outlet Gauge	0 = 30 PSIG 1 = 60 PSIG 2 = 100 PSIG Blank = No Gauge	
9 User Option	Customization (※Standard : Blank)	
10 Grade	Blank = BA Standard (10 Ra µinch) P = Electropolishing (5 Ra µinch) PX = Electropolishing (5 Ra µinch)	

GAUGE PORT INFORMAITON

1/4" INTERNAL FACE SEAL

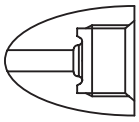

1/4" MALE FACE SEAL

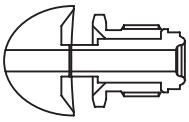

1/4" FEMALE FACE SEAL

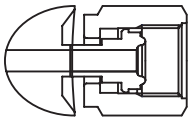

1/4" FIXED MALE FACE SEAL

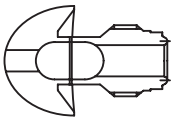

PORT CONFIGURATION

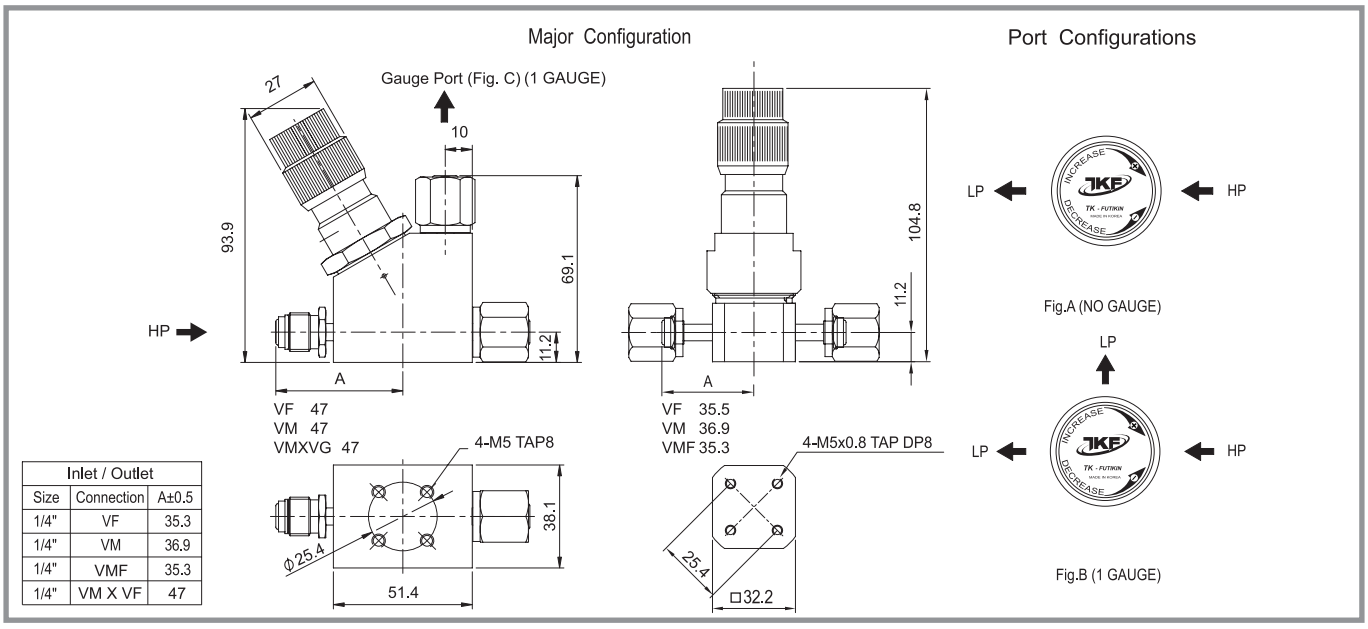

Inlet / Outlet		
Size	Connection	A±0.5
1/4"	VF	35.3
1/4"	VM	36.9
1/4"	VMF	35.3
1/4"	VM X VF	47

REGULATORS |

MRG7 SERIES

MIRCRO REGULATOR

- Compact size
- High performance with low hysteresis.
- All internal surfaces are finished with 10Ra or 5Ra to ensure minimal particle generation and entrapment. Metal-to-metal diaphragm seals provide enhanced leak tight integrity.
- Every step of assembly, welding, testing and final cleaning finished in Class 100 Cleanrooms.
- No spring or threads are exposed to the wetted area.

SPECIFICATIONS

Fluid Media	
All gases corrosive or non-corrosive or those requiring high purity regulation compatible with materials of construction. For other media, consult with factory.	
Pressure Rating	**Per criteria of ANSI / ASME B31.3.**
Max. rated inlet pressure	500 PSIG
Outlet pressure	-10-30, -10-60, -10-100 PSIG
Design proof pressure	150% of Maximum rated pressure
Materials in Contact with Media	
Body	316L Stainless Steel with BA, Electropolish
Seat	PFA
Diaphragm	Hastelloy C-22
Gas contact parts	316L Stainless Steel / Hastelloy C-22
Other Parameters	
Flow coefficient	Cv = 0.1
Temperature	1 x 10^{-9} atm cc / sec He
Inboard leak rate	10Ra or 5Ra microinch (.25 or .13 micrometer)
Operating temperature PCTFE seat	-40°F to +160°F (-40°C to +71°C)
Weight (w/o gauges)	0.87lbs. (369g)

FLOW CURVES

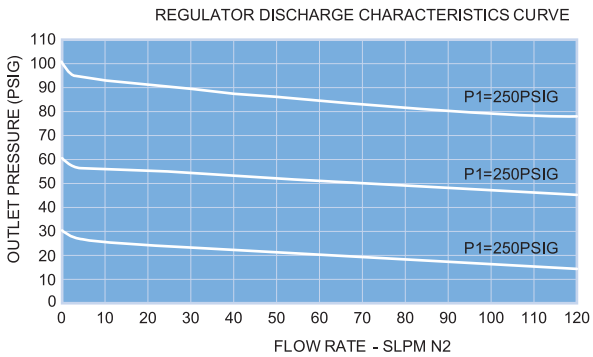

MATERIAL

Wetted Parts	MRG7 Series
Body	316L Stainless Steel
Seat Holder	316L Stainless Steel Hastelloy C-22
Main Valve	316L Stainless Steel Hastelloy C-22
Valve Spring	316 Stainless Steel Inconel 750
Seat	PCTFE
Diaphragm	Hastelloy C-22

ORDERING INFORMATION

DH	4	MRG7	–	VM	–	1	A	1	–	X123	–	PX
1	2	3		4			5			6		7

1 Material	S = 316L Stainless steel	SH = 316L Stainless steel with Hastelloy internals DH = 316L Stainless steel VAR with Hastelloy internals
2 Connection Size	4 = 1/4"	
3 Product	MRG7 Series	
4 Connection Type	TW = Tube Butt Weld VF = Female Type Face Seal VMF = Fixed Male Type Face Seal	
5 Outlet Pressure Range	1A0= -10- 30psig 1A1= -10- 60psig 1A2= -10-100psig	
6 User Option	Customization	
7 Grade	Blank = BA Standard (10 Ra µinch) P = Electropolishing (5 Ra µinch) PX = Electropolishing (5 Ra µinch)	

PORT CONFIGURATION

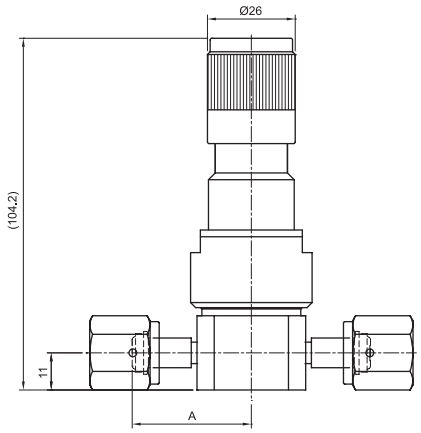

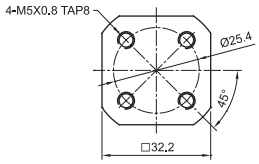

Inlet / Outlet		
Size	Connection	A±0.5
1/4"	VF	35.3
	VM	
	TW	

REGULATORS |

HFRG SERIES

HIGH FLOW REGULATOR

- A regulator for the control of high purity, corrosive, toxic, flammable and inert gases at high flow rate and low pressure.
- Every step of assembly, welding, testing and final cleaning finished in Class 100 Cleanrooms.

SPECIFICATIONS

Pressure Rating (Per criteria of ANSI / ASME B31.3.)	
Max. rated inlet pressure	200, 500 PSIG
Outlet pressure ranges	1-30, 2-75 and 5-150 PSIG
Design proof pressure	150% of Maximum rated pressure
Materials in Contact with Media	
Body	316L Stainless Steel
Seat	FKM (Contact manufacturer for the use of toxic gas)
Diaphragm	PTFE
Gas contact parts	316L Stainless Steel with BA, Electropolish
Other Parameters	
Flow coefficient	Cv = 0.85
Inboard leak rate	2 x 10^{-8} scc / sec He
Temperature	-15°F to +165°F (-26°C to +73°C)

FLOW CURVES

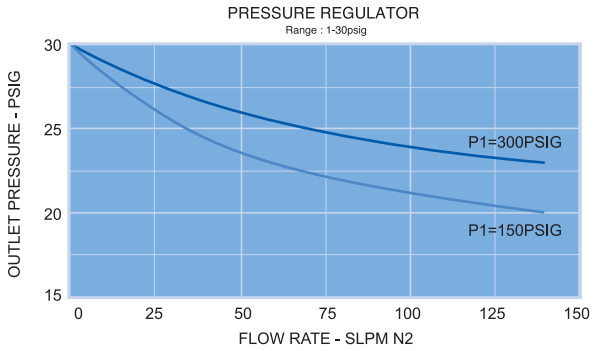

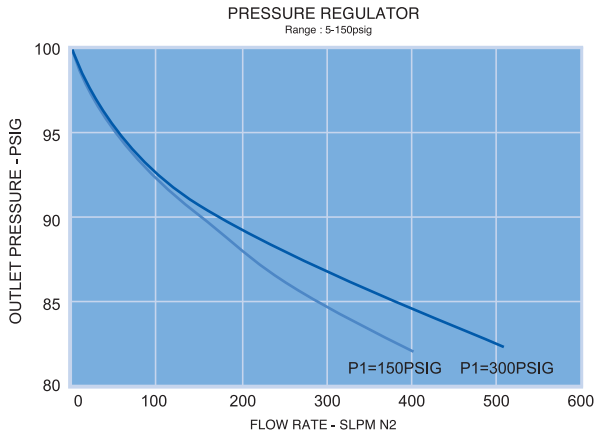

MATERIAL

Wetted Parts	HFRG Series
Body	316L Stainless Steel
Main Valve	316L Stainless Steel
Valve Spring	316 Stainless Steel
Seat	FKM
Diaphragm	PTFE

ORDERING INFORMATION

S	8	HFRG	–	VF	–	1	2	C	1	2	–	X-NO.	–	P
1	2	3		4		5	6	7	8	9		10		11

1 Material	S = 316L Stainless steel D = 316L Stainless steel VAR	
2 Connection Size	4 = 1/4" 6 = 3/8" 8 = 1/2"	
3 Product	HFRG SERIES	
4 Connection Type	NF = Female NPT Thread SW = Compression Lok Fitting TW = Tube Butt Weld	VF = Female Type Face Seal VM = Male Type Face Seal VMF = Fixed Male Type Face Seal
5 Maximum Inlet Pressure	1 = 500 PSIG 2 = 200 PSIG	
6 Maximum Range of Inlet Gauge	1 = 300 PSIG 2 = 600 PSIG Blank = No Gauge	
7 Gauge Port Configuration	A = NONE (fig. A) B = 1/4" Internal Face Seal (fig. C) C = 1/4" Internal Face Seal (fig. B) D = 1/4" Internal Face Seal (fig. D) E = 1/4" Male Face Seal (fig. D) F = 1/4" Male Face Seal (fig. C) H = 1/4" Female Face Seal (fig. D)	I = 1/4" Female Face Seal (fig. C) L = 1/4" Fixed Male Face Seal (fig. C) M = 1/4" Fixed Male Face Seal (fig. D) N = 1/4" Female NPT Thread (fig. B) O = 1/4" Female NPT Thread (fig. C) P = 1/4" Female NPT Thread (fig. D)
8 Outlet Pressure Range	0 = 1 ~ 30 PSIG 1 = 2 ~ 75 PSIG 2 = 5 ~ 150 PSIG	
9 Maximum Range of Outlet Gauge	0 = 30 PSIG 1 = 100 PSIG 2 = 160 PSIG 3 = 60 PSIG Blank = No Gauge	
10 User Option	Customization (※Standard:Blank)	
11 Grade	Blank = BA Standard (10 Ra µinch) P = Electropolishing (5 Ra µinch)	

GAUGE PORT INFORMAITON

1/4" INTERNAL FACE SEAL

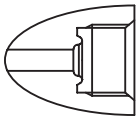

1/4" FEMALE NPT THREAD

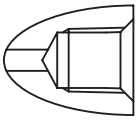

1/4" MALE FACE SEAL

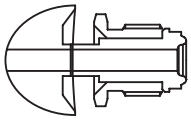

1/4" FEMALE FACE SEAL

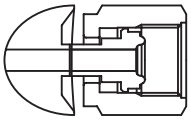

1/4" FIXED MALE FACE SEAL

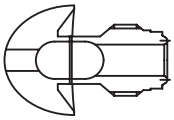

PORT CONFIGURATION

Inlet / Outlet		
Size	Connection	A±0.5
1/4"	VM	54.5
1/4"	VF	54.5
1/4"	SW	52.5
1/4"	TW	47.5
1/4"	NF	30
3/8"	TW	63.5
3/8"	SW	58.2
1/2"	VF	64.5
1/2"	VM	63.5
1/2"	SW	58.2
1/2"	TW	63.5
1/2"	NF	35

Major Configuration

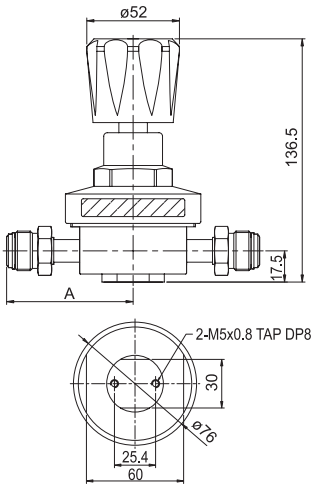

Port Configurations

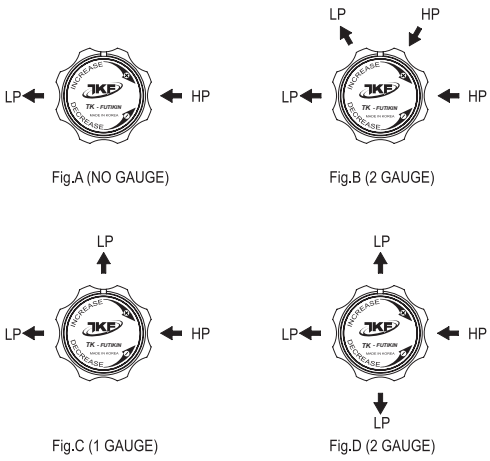

Fig.A (NO GAUGE)

Fig.B (2 GAUGE)

Fig.C (1 GAUGE)

Fig.D (2 GAUGE)

HFRG2 SERIES

HIGH FLOW REGULATOR

- A regulator for the control of high purity, corrosive, toxic, flammable and inert gases at high flow rate and low pressure.
- Metal to metal diaphragm seals provide enhances leak tight integrity.
- Every step of assembly, welding, testing and final cleaning finished in Class 100 Cleanrooms.

SPECIFICATIONS

Pressure Rating	
Max. rated inlet pressure	150 or 250 PSIG
Outlet pressure ranges	1-30, 1-60, 1-100 PSIG
Design proof pressure	150% of Maximum rated pressure
Materials in Contact with Media	
Body	316L Stainless Steel
Seat	PFA
Diaphragm	Hastelloy C-22
Gas contact parts	316L Stainless Steel
Other Parameters	
Flow coefficient	Cv = 1.6
Certified maximum inbord leak rate	1 x 10^{-9} atm cc / sec He
Internal Surface Finish	5 Ra or 10 Ra microinch
Operating temperature	-15°F to 200°F (-26°C to 93°C)
Weight (w/o gauges)	3.5lbs. (1.6kg)

FLOW CURVES

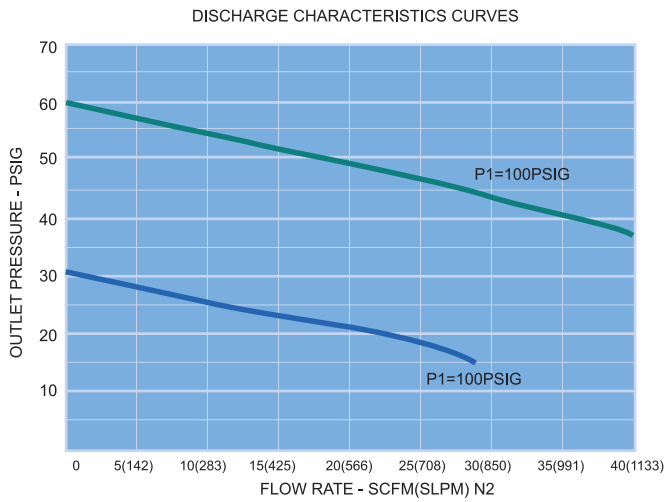

MATERIAL

Wetted Parts	HFRG2 Series
Body	316L Stainless Steel
Seat Holder	316L Stainless Steel
Main Valve	316L Stainless Steel
Valve Spring	316 Stainless Steel
Seat	PFA
Diaphragm	Hastelloy C-22

ORDERING INFORMATION

S	8	HFRG2	–	VM	–	1	2	C	1	1	–	X-NO.	–	P
1	2	3		4		5	6	7	8	9		10		11

1 Material	S = 316L Stainless steel D = 316L Stainless steel VAR	
2 Connection Size	4 = 1/4" 6 = 3/8" 8 = 1/2" 12 = 3/4"	
3 Product	HFRG2 SERIES	
4 Connection Type	TW = Tube Butt Weld VF = Female Type Face Seal VM = Male Type Face Seal	VMF = Fixed Male Type Face Seal SW = Compnession Lok Fitting VCO = VCO Type Face Seal
5 Maximum Inlet Pressure	1 = 250 PSIG 2 = 150 PSIG	
6 Maximum Range of Inlet Gauge	1 = 200 PSIG 2 = 300 PSIG Blank = No Gauge	
7 Gauge Port Configuration	A = NONE (fig. A) B = 1/4" Internal Face Seal (fig. C) C = 1/4" Internal Face Seal (fig. B) D = 1/4" Internal Face Seal (fig. D) E = 1/4" Male Face Seal (fig. D) F = 1/4" Male Face Seal (fig. C) H = 1/4" Female Face Seal (fig. D)	I = 1/4" Female Face Seal (fig. C) L = 1/4" Fixed Male Face Seal (fig. C) M = 1/4" Fixed Male Face Seal (fig. D) N = 1/4" Female NPT Thread (fig. B) O = 1/4" Female NPT Thread (fig. C) P = 1/4" Female NPT Thread (fig. D)
8 Outlet Pressure Range	0 = 1 ~ 30 PSIG 1 = 1 ~ 60 PSIG 2 = 1 ~ 100 PSIG	
9 Maximum Range of Outlet Gauge	0 = 30 PSIG 1 = 60 PSIG 2 = 100 PSIG	3 = 160 PSIG Blank = No Gauge
10 User Option	Customization (※Standard:Blank)	
11 Grade	Blank = BA Standard (10 Ra µinch) P = Electropolishing (5 Ra µinch)	

GAUGE PORT INFORMAITON

1/4" INTERNAL FACE SEAL 1/4" FEMALE NPT THREAD 1/4" MALE FACE SEAL 1/4" FEMALE FACE SEAL 1/4" FIXED MALE FACE SEAL

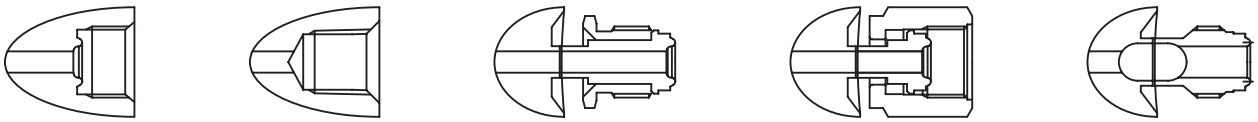

PORT CONFIGURATION

Major Configuration

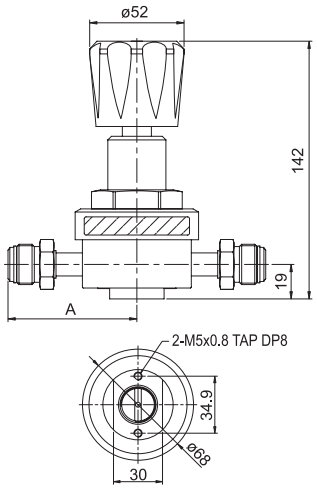

Inlet / Outlet		
Size	Connection	A±0.5
1/4"	VMF	50.4
1/4"	VF	52
1/4"	VM	52
1/4"	SW	52.5
1/2"	VF	71
1/2"	VM	71
1/2"	SW	58.2
1/2"	TW	47
1/2"	VCO	57
3/4"	TW	71
3/4"	VM	71
3/4"	VF	71
3/4"	SW	65

Port Configurations

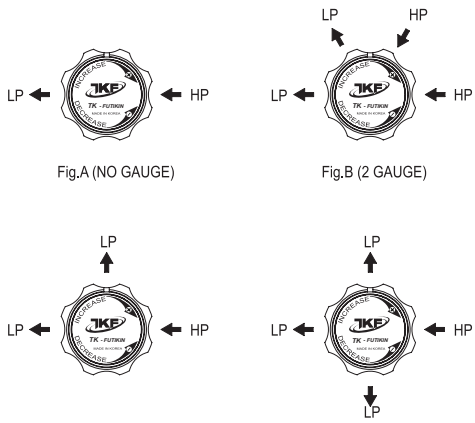

Fig.A (NO GAUGE) Fig.B (2 GAUGE) Fig.C (1 GAUGE) Fig.D (2 GAUGE)

HFRG3 SERIES

HIGH FLOW REGULATOR

- A regulator for the control of high purity, corrosive, toxic, flammable and inert gases at high flow rate.
- Metal to metal diaphragm seals provide enhances leak tight integrity.
- Every step of assembly, welding, testing and final cleaning finished in Class 100 Cleanrooms.

SPECIFICATIONS

Pressure (Rating per criteria of ANSI/ASME B31.3)	
Max. rated inlet pressure	500 PSIG
Outlet pressure ranges	1-25, 1-50, 1-100, 1-150 & 1-200 PSIG
Design proof pressure	150% of Maximum rated pressure
Materials in Contact with Media	
Body	316L Stainless Steel
Seat	PFA
Diaphragm	Hastelloy C-22
Gas contact parts	316L Stainless Steel, PTFE
Other Parameters	
Flow coefficient	Cv = 1.0
Certified maximum inbord leak rate	1 x 10^{-9} atm cc / sec He
Internal Surface Finish	5 Ra or 10 Ra microinch
Operating temperature	-15°F to 165°F (-26°C to 74°C)
Weight (w/o gauges)	3.7lbs. (1.7kg)

FLOW CURVES

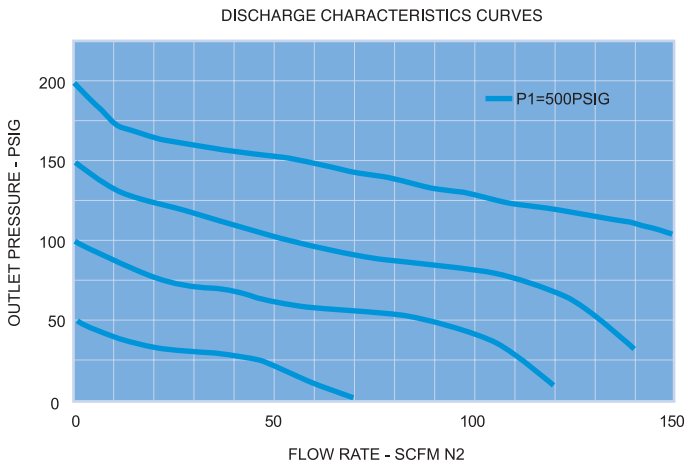

MATERIAL

Wetted Parts	HFRG3 Series
Body	316L Stainless Steel
Seat Holder	316L Stainless Steel
Main Valve	316L Stainless Steel
Valve Spring	316 Stainless Steel
Seat	PFA
Diaphragm	Hastelloy C-22

ORDERING INFORMATION

S	8	HFRG3	–	TW	–	2	1	C	2	2	–	X-NO.	–	P
1	2	3		4		5	6	7	8	9		10		11

1 Material	S = 316L Stainless steel	D = 316L Stainless steel VAR
2 Connection Size	6 = 3/8" 8 = 1/2" 12 = 3/4" 8 = 1/2"	16 = 1" 15A 20A 25A
3 Product	HFRG3 SERIES	
4 Connection Type	NF = Female NPT Thread TW = Tube Butt Weld VF = Female Type Face Seal	VM = Male Type Face Seal SW = Compression Lok Fitting
5 Maximum Inlet Pressure	2 = 500PSIG	
6 Maximum Range of Inlet Gauge	1 = 600 PSIG	Blank = No Gauge
7 Gauge Port Configuration	A = NONE (fig. A) B = 1/4" Internal Face Seal (fig. C) C = 1/4" Internal Face Seal (fig. B) D = 1/4" Internal Face Seal (fig. D) E = 1/4" Male Face Seal (fig. D) F = 1/4" Male Face Seal (fig. C) H = 1/4" Female Face Seal (fig. D)	I = 1/4" Female Face Seal (fig. C) L = 1/4" Fixed Male Face Seal (fig. C) M = 1/4" Fixed Male Face Seal (fig. D) N = 1/4"Female NPT Thread (fig. B) O = 1/4" Female NPT Thread (fig. C) P = 1/4" Female NPT Thread (fig. D)
8 Outlet Pressure Range	0 = 1 ~ 25PSIG 1 = 1 ~ 50PSIG 2 = 1 ~ 100PSI	3 = 1 ~ 150PSIG 4 = 1 ~ 200PSIG
9 Maximum Range of Outlet Gauge	0 = 30 PSIG 1 = 60 PSIG 2 = 160 PSIG 3 = 200 PSIG	4 = 300 PSIG 5 = 100 PSIG Blank = No Gauge
10 User Option	Customization (※Standard:Blank)	
11 Grade	Blank = BA Standard (10 Ra µinch)	P = Electropolishing (5 Ra µinch)

GAUGE PORT INFORMAITON

1/4" INTERNAL FACE SEAL 1/4" FEMALE NPT THREAD 1/4" MALE FACE SEAL 1/4" FEMALE FACE SEAL 1/4" FIXED MALE FACE SEAL

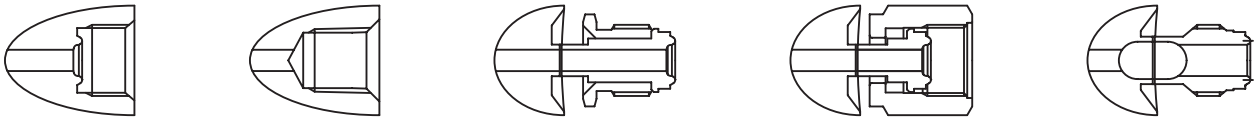

PORT CONFIGURATION

Major Configuration

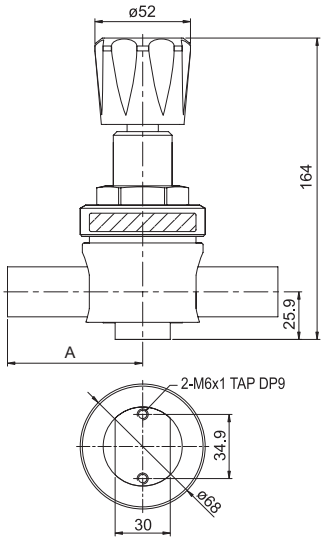

Inlet / Outlet		
Size	Connection	A±0.5
1/2"	TW	47.5
1/2"	VF	71
3/4"	SW	63
3/4"	TW	105
3/4"	VF	72
1"	SW	70
1"	TW	105
1"	VF	88

Port Configurations

Fig.A (NO GAUGE)

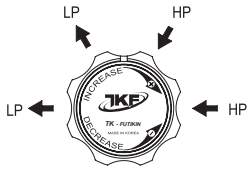

Fig.B (2 GAUGE)

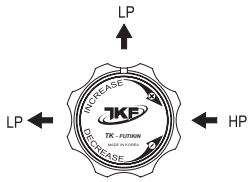

Fig.C (1 GAUGE)

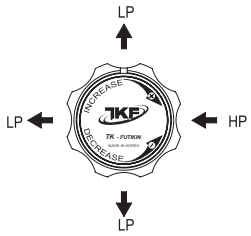

Fig.D (2 GAUGE)

HFRG4 SERIES

HIGH FLOW REGULATOR

- A regulator for the control of high purity, corrosive, toxic, flammable and inert gases at high flow rate and low pressure.
- Every step of assembly, welding, testing and final cleaning finished in Class 100 Cleanrooms.
- Low droop and High flow.

SPECIFICATIONS

Pressure Rating	
Max. rated inlet pressure	300 PSIG
Outlet pressure	1-30, 1-60, 1-100 or 1-150 PSIG
Design proof pressure	150% of Maximum rated pressure
Materials in Contact with Media	
Body	316L Stainless Steel
Seat	FKM (Contact manufacturer for the use of toxic gas)
Diaphragm	TFM-1600
Gas contact parts	316L Stainless Steel
Other Parameters	
Flow coefficient	1/2" = Cv2.0, 3/4" = Cv3.0, 1" = Cv5.0
Temperature	PTFE : -44°C to + 71°C
Inboard leak rate	2 x 10^{-8} atm cc / sec He
Weight (w/o gauges)	15lbs. (6.8kg)

FLOW CURVES

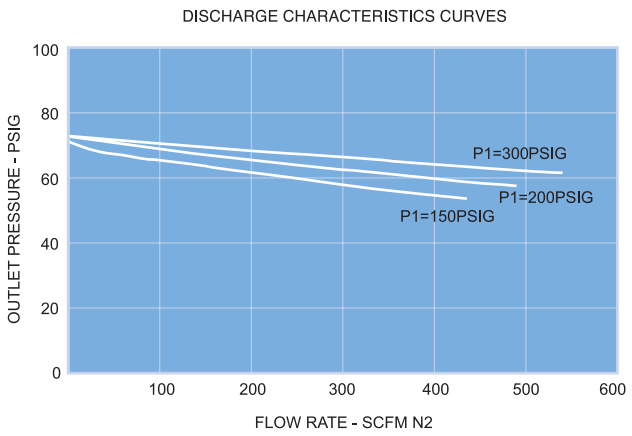

MATERIAL

Wetted Parts	HFRG4 Series
Body	316L Stainless Steel
Seat Holder	316L Stainless Steel
Main Valve	316L Stainless Steel FKM
Valve Spring	316 Stainless Steel
Seat	FKM
Diaphragm	PTFE

ORDERING INFORMATION

S	16	HFRG4	—	TW	—	1	1	C	1	2	—	X-NO.	—	P
1	2	3		4		5	6	7	8	9		10		11

1 Material	S = 316L Stainless steel D = 316L Stainless steel VAR	
2 Connection Size	8 = 1/2" 12 = 3/4" 16 = 1"	
3 Product	HFRG4 SERIES	
4 Connection Type	TW = Tube Butt Weld VF = Female Type Face Seal VM=Male Type Face Seal	
5 Maximum Inlet Pressure	1 = 300 PSIG	
6 Maximum Range of Inlet Gauge	1 = 300 PSIG Blank = No Gauge	
7 Gauge Port Configuration	A = No Gauge Port (Fig. A) B = 1/4" Internal Face Seal (Fig. C) C = 1/4" Internal Face Seal (Fig. B) D = 1/4" Internal Face Seal (Fig. D) E = 1/4" Male Face Seal (Fig. D) F = 1/4" Male Face Seal (Fig. C) H = 1/4" Female Face Seal (Fig. D)	I = 1/4" Female Face Seal (Fig. C) L = 1/4" Fixed Male Face Seal (Fig. C) M = 1/4" Fixed Male Face Seal (Fig. D) N = 1/4" Female NPT Thread (fig. B) O = 1/4" Female NPT Thread (fig. C) P = 1/4" Female NPT Thread (fig. D)
8 Outlet Pressure Range	0 = 1 ~ 30 PSIG 1 = 1 ~ 60 PSIG	2 = 1 ~ 100 PSIG 3 = 1 ~ 150 PSIG
9 Maximum Range of Outlet Gauge	0 = 30 PSIG 1 = 60 PSIG 2 = 100 PSIG	3 = 160 PSIG Blank = No Gauge
10 User Option	Customization (※Standard : Blank)	
11 Grade	Blank = BA Standard (10 Ra µinch) P = Electropolishing (5 Ra µinch)	

GAUGE PORT INFORMAITON

1/4" INTERNAL FACE SEAL

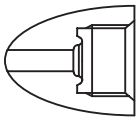

1/4" FEMALE NPT THREAD

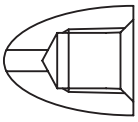

1/4" MALE FACE SEAL

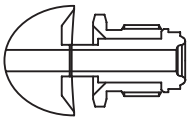

1/4" FEMALE FACE SEAL

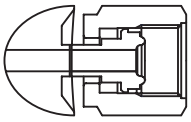

1/4" FIXED MALE FACE SEAL

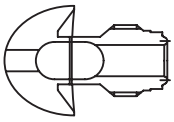

PORT CONFIGURATION

Major Configuration

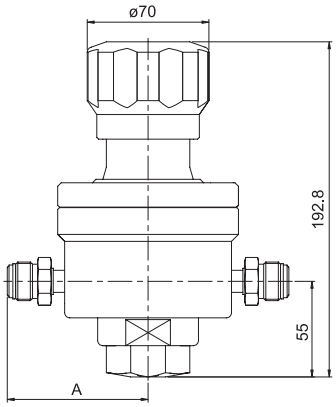

Inlet / Outlet		
Size	Connection	A±0.5
1/2"	VM	81
3/4"	VF	87
1"	VM	100.2
1"	SW	86
1"	TW	125

Port Configurations

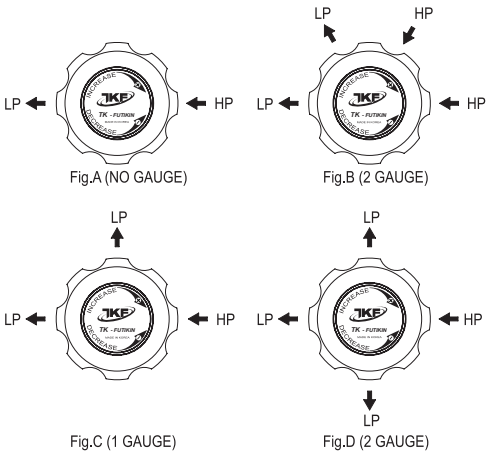

Fig.A (NO GAUGE)

Fig.B (2 GAUGE)

Fig.C (1 GAUGE)

Fig.D (2 GAUGE)

AHFRG SERIES

A SIZE HIGH FLOW REGULATOR

- Internal surfaces are finished with 10Ra or 5Ra to ensure minimal particle generation and entrapment.
- Every step of assembly, welding, testing and final cleaning finished in class 100 cleanrooms.
- High flow.

SPECIFICATIONS

Pressure Rating	
Pressure rating per criteria of ANSI/ASME B31.3 Maximum rated inlet pressure	300 PSIG (21.1 kg/cm^2)
Maximum outlet pressure	130 PSIG (9.1 kg/cm^2)
Design proof pressure	150% of maximum rated pressure
Design burst pressure	400% of maximum operating pressure
Materials in Contact with Media	
Body	316L Stainless Steel
Seat	PTFE (Contact manufacturer for the use of toxic gas)
Diaphragm	316L Stainless Steel
Gas contact parts	316L Stainless Steel, FKM
Other Parameters	
Inboard leak rate	2 x 10^{-8} atm cc / sec He
Operating temperature	-20°F to +150°F (-29°C to +65°C)
Flow coefficient	Cv = 8.0

FLOW CURVES

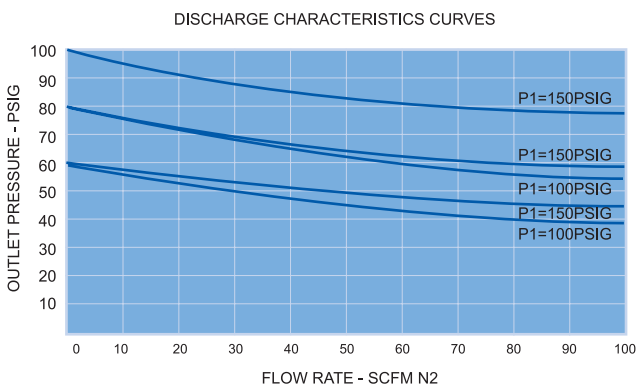

MATERIAL

Wetted Parts	AHFRG Series
Body	316L Stainless Steel
Seat Holder	316L Stainless Steel
Main Valve	316L Stainless Steel, FKM
Valve Spring	316 Stainless Steel
Seat	PTFE
Diaphragm	316L Stainless Steel

ORDERING INFORMATION

S	40	AHFRG	–	TW	–	X-NO.	–	P
1	2	3		4		5		6

1 Material	S = 316L Stainless steel D = 316L Stainless steel VAR
2 Connection Size	15 = 15A 20 = 20A 25 = 25A 40 = 40A 50 = 50A T24 = 1-1/2" T32 = 2" For other sizes, please consult factory.
3 Product	AHFRG Series
4 Connection Type	TW = Tube Butt Weld
5 Outlet Pressure Range	Customization (※Standard : Blank)
6 Gauge	Blank = BA Standard (10 Ra µinch) P = Electropolishing (5 Ra µinch)

PORT CONFIGURATION

Major Configuration

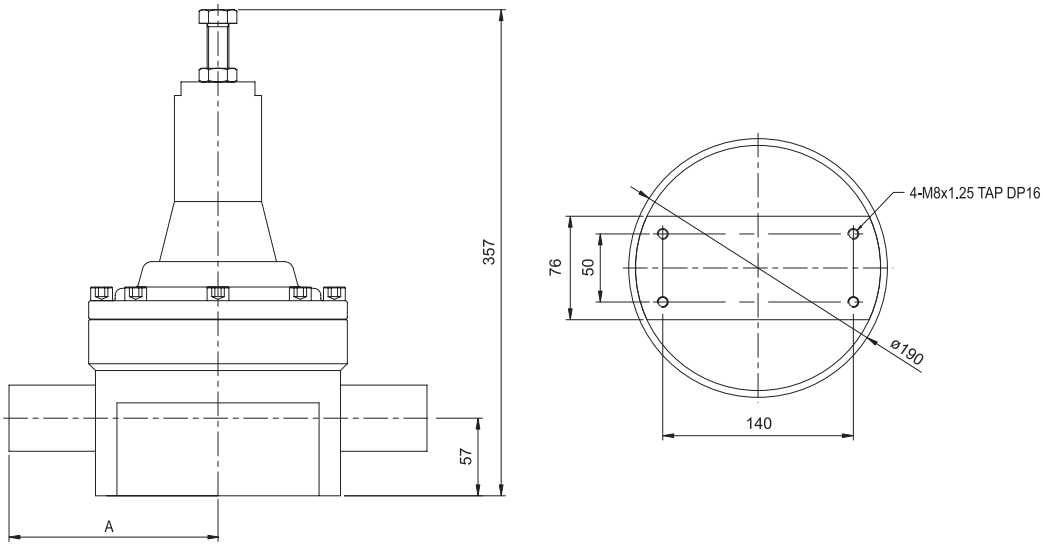

Inlet / Outlet		
Size	Connection	A±0.5
15A	TW	153.5
20A	TW	153.5
25A	TW	153.5
32A	TW	153.5
50A	TW	153.5
1"	VF	143
1"	VM	143
2"	TW	153.5

CORG SERIES (CROSSOVER BOARD)

CROSSOVER BOARD REGULATOR

- Max inlet pressure 3500 psig, outlet pressure 150 psig.
- Metal-to-metal diaphragm seals provide enhanced leak tight intergrity.
- Constant Gas Supply.
- Panel Mounting Beacket standard.

SPECIFICATIONS

Pressure Rating	Per criteria of ANSI / ASME B31.3.
Maximum rated inlet pressure	3500 PSIG (241.3 bar)
Outlet pressure ranges	1-30, 1-60, 1-100, 1-150 PSIG
Design proof pressure	150% of Maximum rated pressure
Materials in Contact with Media	
Body	316L Stainless Steel
Seat	PCTFE
Diaphragm	Hastelloy C-22
Gas contact parts	316L Stainless Steel
Other Parameters	
Flow coefficient	Cv = 0.06
Certified maximum inboard leak rate	2 x 10^{-8} atm cc / sec He
Internal surface finish	-10Ra microinch (.25 micrometer)
Operating temperature	-15°F to +165°F (-26°C to +74°C)
Weight (w/o gauges)	2.7lbs. (3.5kg)

FLOW CURVES

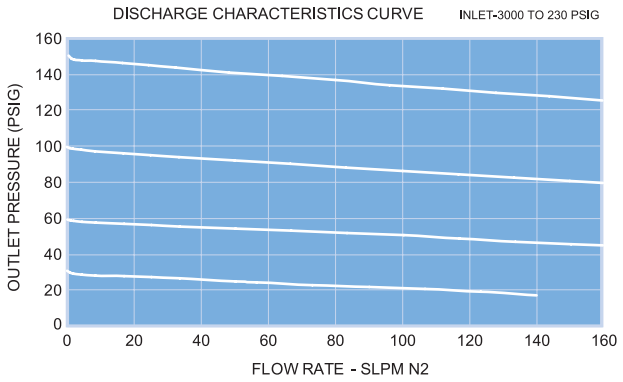

ORDERING INFORMATION

S	4	CORG	–	NF	–	1	1	A	2	3	–	X-NO.
1	2	3		4		5	6	7	8	9		10

1 Material	S = 316L Stainless steel
2 Connection Size	4 = 1/4"
3 Product	CORG SERIES
4 Connection Type	NF = Female NPT Thread
5 Maximum Inlet Pressure	1 = 3500 PSIG
6 Maximum Range of Inlet Gauge	1 = 3500 PSIG 2 = 4000 PSIG
7 Gauge Port Configuration	A = 1/4" Female NPT Thread
8 Outlet Pressure Range	0 = 1 ~ 30 PSIG 1 = 1 ~ 60 PSIG 2 = 1 ~ 100 PSIG 3 = 1 ~ 150 PSIG
9 Maximum Range of Outlet Gauge	0 = 30 PSIG 1 = 60 PSIG 2 = 100 PSIG 3 = 160 PSIG 4 = 200 PSIG
10 User Option	Customization (※Standard:Blank)

PORT CONFIGURATION

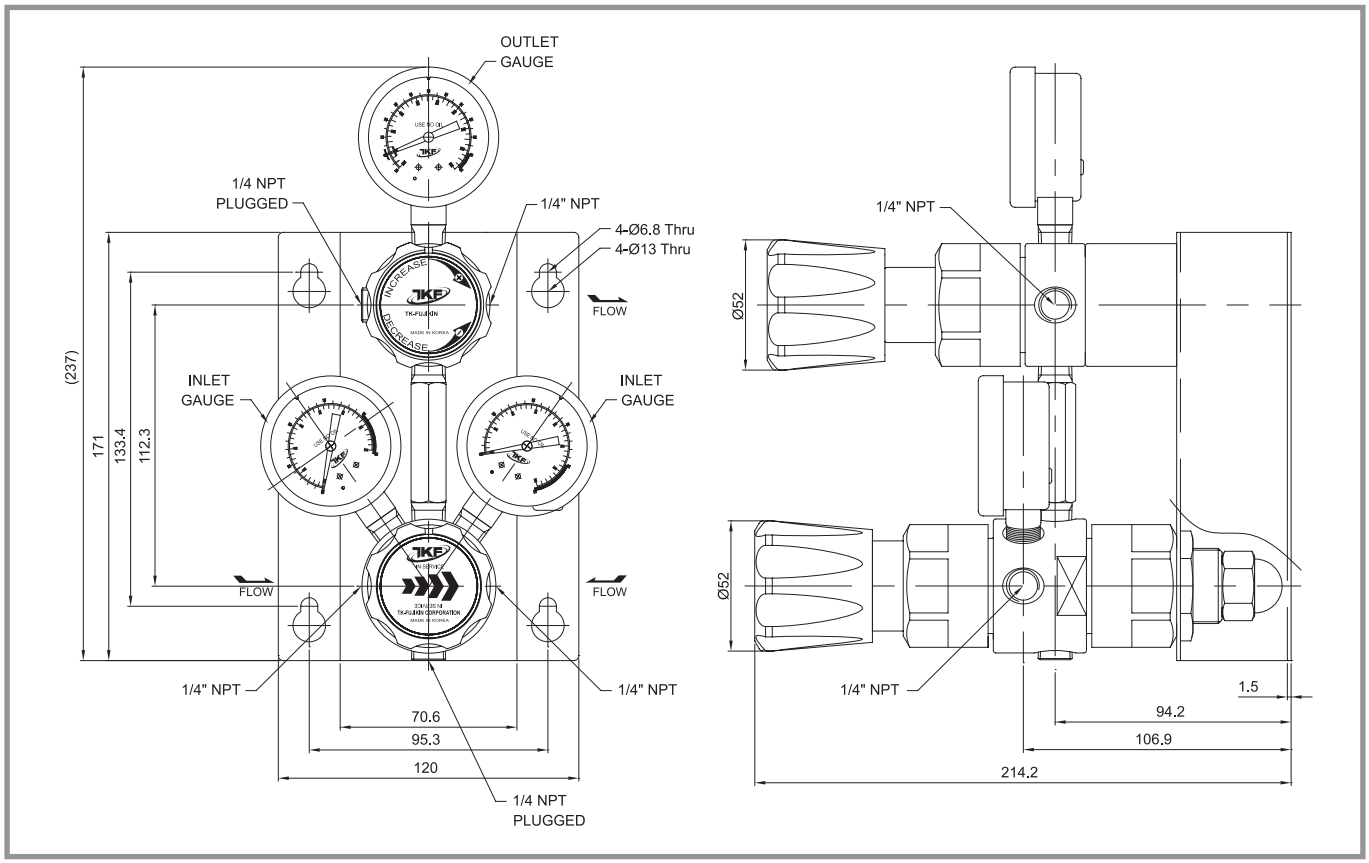

MGC1 SERIES

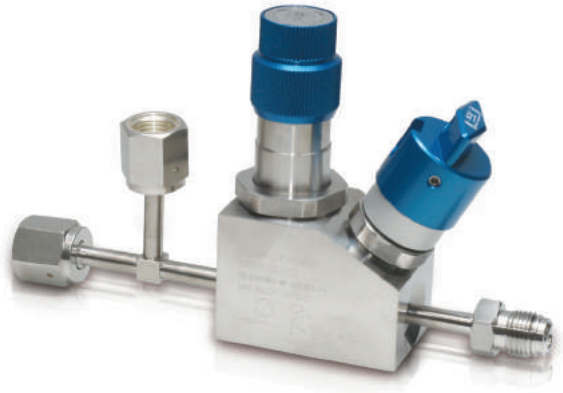

- Compact size
- High performance with low hysteresis

SPECIFICATIONS

Pressure Rating	
Maximum rated inlet pressure	150 PSIG
Outlet pressure ranges	1-30, 1-60, 1-100PSIG
Design proof pressure	150% of Maximum rated pressure
Materials in Contact with Media	
Body	316L Stainless Steel
Seat	PFA
Regulator diaphragm	Hastelloy C-22
Valve stem, Spring	316L Stainless Steel
Valve diaphragm	Phynox
Other Parameters	
Flow coefficient	Cv = 0.1
Temperature	-40°F to +71°F (-26°C to +74°C)
Inboard leak rate	1 x 10^{-9} atm cc / sec He
Operating temperature	-15°F to +165°F (-26°C to +74°C)
Weight (w/o gauges)	1.5lbs. (0.68kg)

FLOW CURVES

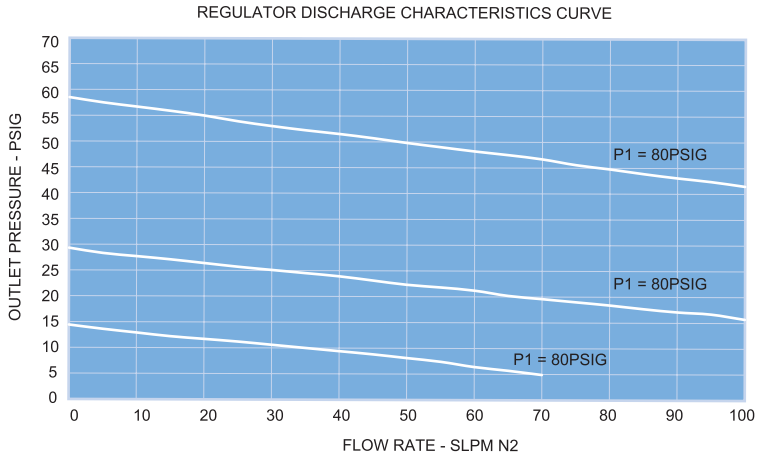

Gas Filter

Ultra-high purity in-line

TKF GAS FILTER SERIES

Hastelloy Gas Filter

Stainless Steel Gas Filter

PTFE Gas Filter

IGS Gas Filter

Gasket Filter

TK-FUJIKIN CORPORATION

Fujikin Carp Group

ELEMENT SELECTION GUIDE

No.	GAS CHEMICAL FORMULA		ELEMENT MATERIAL		
			SUS316L	HC-276	PTFE
1	Argon	Ar	●	●	●
2	Arsine	AsH3	●	x	●
3	Boron Trichloride	BCl3	●	●	●
4	Boron Trifluoride	BF3	x	●	●
5	Diborane	B2H6	●	●	●
6	Carbon Dioxide	CO2	●	●	●
7	Carbon Monoxide	CO	●	●	●
8	Chlorine	Cl2	●	●	●
9	Halocarbon 13	CClF3	●	●	●
10	Halocarbon 14 Tetrafluoromethane	CF4	●	●	●
11	Halocarbon 23 Trifluoromethane	CHF3	●	●	●
12	Halocarbon 115	C2ClF5	●	●	●
13	Halocarbon 116 Hexafluoroethane	C2F6	●	●	●
14	Halocarbon 23 Trifluoromethane	CH3F	●	●	●
15	Halocarbon 318 Octafluorocyclobutane	C4F8	●	●	●
16	Halocarbon 218 Perfluoropropane	C3F8	●	●	●
17	Trimethylamine	(CH3)3N	●	●	●
18	Germane	GeH4	●	●	●
19	Helium	He	●	●	●
20	Hydrogen	H2	●	●	●
21	Hydrogen Bromide	HBr	x	●	●
22	Hydrogen Chloride	HCl	x	●	●
23	Hydrogen Fluoride	HF	x	●	●
24	Hydrogen Selenide	H2Se	●	●	●
25	Hydrogen Sulfide	H2S	●	●	●
26	Krypton	Kr	●	●	●
27	Ammonia	NH3	●	●	●
28	Neon	Ne	●	●	●
29	Nitrogen	N2	●	●	●
30	Nitrogen Trifuoride	NF3	●	●	●
31	Nitrous Oxide	N2O	●	●	●
32	Oxygen	O2	●	●	●
33	Ozone	O3	x	x	●
34	Phosphine	PH3	●	●	●
35	Phosphorous Trifluoride	PF3	x	●	●
36	Silane	SiH4	●	●	●
37	Silicon Tetrachloride	SiCl4	x	●	●
38	Silicon Tetrafluoride	SiF4	x	●	●
39	Dichlorosilane	SiH2Cl2	x	●	●
40	Halocarbon 116 Hexafluoroethane	SF6	●	●	●
41	Trichlorosilane	SiHCl3	●	●	●
42	Trimethylsilane	SiH(CH3)3	●	●	●
43	Tungsten Hexafluoride	WF6	x	●	●
44	Xenon	Xe	●	●	●

● - Recommended, ▲- Limited, X - Not Recommended

SPECIFICATION

Item	Sample Q'ty	METHOD	CRITERIA
Raw Material & Element Powder	5PC/Lot*1)	(1) Mill Certificate (2) Visual (3) Dimension : Vernier Caliper Tape measure	- Confirm chemical contents and Mechanical properties in mill certificate. - No harmful damage on surface. - Meet to specification for O.D. and length. - Confirm Powder certificate.
Element	5PC/Lot	(1)Visual (2)Dimension: Vernier Caliper	- No harmful damage on surface. - Meet to specification for O.D. and length.
Visual	100%	External: Visual Inspection	- No burr, rust, discoloration, mechanical damage, and contamination
Dimensional Inspection	KS A ISO 2859	(1)O.D.: Vernier Caliper (2)Length: Vernier Caliper	- Designated dimension shall be met to required specification
Inner Surface Roughness	1PC / LOT*3)	(1)Cut Off Length : 0.25mm (2)Measuring Length: 1.25mm	- Ra ≤5 μinch
Welding	100%	External: Visual, Magnifier	- Maintain even width and height for welding bead - No Pit or crack is allowed - No discoloration
Particle	100%	(1)Test Fluid: Dry Air (2)Pressure : 4 ~ 6 kgf/cm^2 (3)Flow rate : 35 ~ 40ℓ/min (4)Test time : 1min	- No count 0.0025μinch and larger
He Leak	100%	Equipment: He Leak Detector	- 1 x 10^{-9} atm·cc/sec

Note : *1) Inspection Lot : Each heat number
*2) AQL 2.5, Ⅱ,1time sampling, normal inspection
*3) Inspection Lot: Each Traveller

SELECTION CRITERIA

1	Particle Retention Efficiency
2	Particle Shedding
3	Removal Rating
4	Pressure Drop & Inlet Pressure
5	Flow Rate
6	Max. Operating Temperature
7	Gas Compatibility & Resistance
8	Connection Type
8	Pollutants & Contaminants
10	Cleanliness

TKF
Ultra-high purity in-line Gas filter

PRODUCTION FLOW

CAREFULLY SELECTED MATERIALS

Selecting and standardizing a highly clean material reduced non-metalic inclusions and outgases. Further, production of VAR material that is highly resistant to corrosion and Hastelloy® C-22™ material are even made possible.

HIGH PRECISION MACHINING PROCESS

Using fully automatic, high precision, high-speed CNC Machining center and lathe, a precision machining process is established. With high precision locating, automatic dimensional calculation and automatic compensation, an unattended, labor-reduced production process is made possible.

ULTRA-HIGH CLEANING PROCESS

Using TKF unique technology for super cleanness, passivation treatment by means of special electropolishing, etc. is applied to the smooth machined surface before polishing process. This enables to form a highly corrosion-resistant and super clean surface structure.

CLEAN WELDING

Clean welding method is made available by using a high speed, full-automatic orbital welding machine. Using a sealed inner and outer manostat gauge in the clean room, inner pressure is controlled with hyper pure inert-gas so that the totally clean welding technology can fully contribute to realization of the flat bead condition, etc..

ULTRA PRECISION CLEANING

An automatic processing line including ultra pure hot water with resistivity of more than 17MΩcm has been established in the clean room. The best possible cleaning condition is achieved here prior to the assembly.

ASSEMBLY IN THE CLEAN ROOM

Production staffs fully acquainted with the special assembling method are dedicated to the assembly process in the certified clean room.

CLEAN PACKING

Packing is carried out at the certified clean room with inner vacuum seal method.
In this way, mixing-in of foreign particles at the time of packing is extensively reduced to its minimum.

FILTRATION MECHANISM

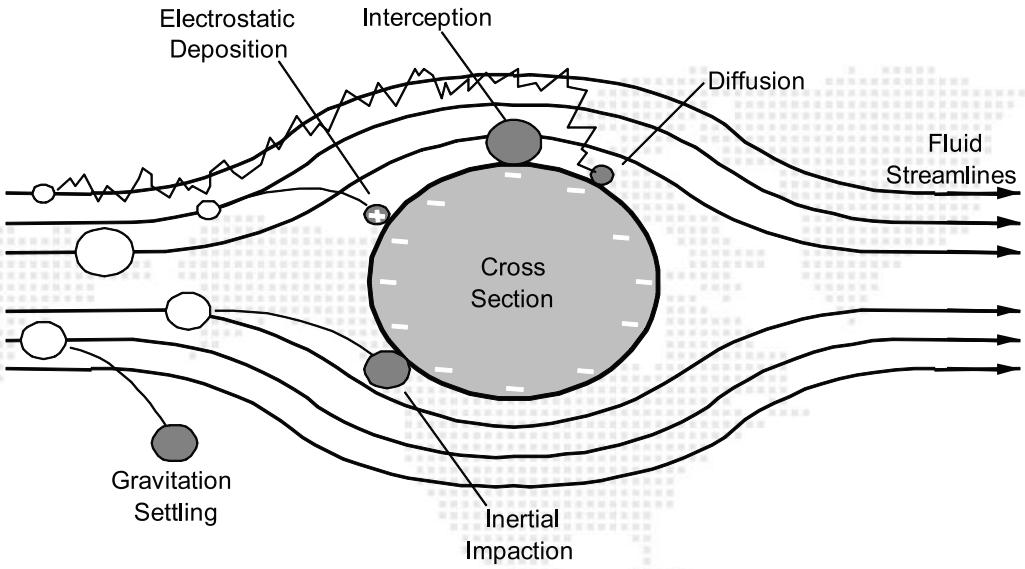

BUSINESS SCOPE

- GASES & CHEMICALS
- PHARMACEUTICAL
- FAB INSTALLATION
- SEMI-CONDUCTOR & TFT-LCD
- CLEAN ROOM
- LAB & RESEARCH
- GENERAL INDUSTRY
- ENERGY AND ENVIRONMENT

HASTELLOY GAS FILTER

HH-A SERIES

- Ultra-high purity in-line gas filter
- All Hastelloy constructions
- High temperature and dynamic pressure applications
- Compact size and variable end connections

PRODUCT FEATURES

- Wide range flow rate from 15 to 300 SLPM
- Corrosion resistant Hastelloy body with excellent performance for either inert or corrosive gas applications
- 3 Nanometer particle filtering capability keeps up high flow efficiency with minimum pressure drop
- 5Ra electro-polished surface prevents internal contaminations
- Baked with hot nitrogen after DI water cleaning to meet semiconductor process standards
- Class 100 manufacturing, cleaning and packaging environment
- 100% helium leak tested

ORDERING INFORMATION

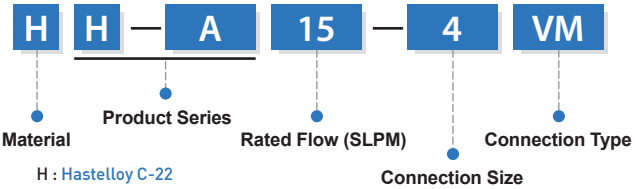

Size		Connection	
4	1/4″	VM	MFS male type
6	3/8″	SW	Lok type
8	1/2″		

SPECIFICATIONS

Removal Rating	≥ 0.0025μm	
Retention	Greater than 99.9999999% Removal of all particles down to 0.0025μm	
Rated Flow @ 10^9	15 SLPM	
	60 SLPM	
	120 SLPM	
	200 SLPM	
	300 SLPM	
Materials	Filter element	Hastelloy C-276
	Electropolished housing	Hastelloy C-22
Operating Conditions	Maximum inlet pressure	21 MPa (210kgf/cm²) at 20°C
	Maximum differential pressure	15 MPa (153kgf/cm²) at 20°C
	Maximum operating temperature	460 °C (Inert gas)
Helium Leak Rating	1 x 10^{-9} atm·cc/sec	
Surface Finish Interior	≤ Ra 5μinch	

DIMENSIONS

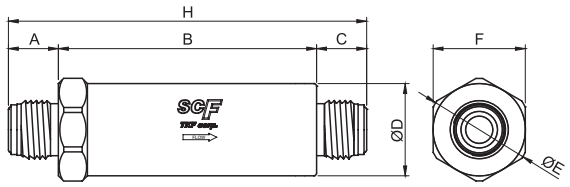

Part No.	A/mm	B/mm	C/mm	D/mm	E/mm	F/mm	H/mm
HH-A15-4VM	15.5	53	15.5	27.5	30	27	84
HH-A15-4SW	10.4	52.2	10.4	27.5	30	27	73
HH-A60-4VM	15.5	53	15.5	27.5	30	27	84
HH-A60-4SW	10.4	52.2	10.4	27.5	30	27	73
HH-A60-6(8)VM	19	53	19	27.5	30	27	91
HH-A120-4VM	15.5	96	15.5	29.5	33	30	127
HH-A120-4SW	10.4	95.2	10.4	29.5	33	30	116
HH-A120-6(8)VM	19	96	19	29.5	33	30	134
HH-A120-6(8)SW	12	96	12	29.5	33	30	120
HH-A200-4VM	15.5	98	15.5	35	39	35	129
HH-A200-4SW	10.4	97.2	10.4	35	39	35	118
HH-A200-6(8)VM	19	98	19	35	39	35	136
HH-A200-6(8)SW	12	98	12	35	39	35	122
HH-A300-4VM	15.5	98	15.5	35	39	35	129
HH-A300-4SW	10.4	97.2	10.4	35	39	35	118
HH-A300-6(8)VM	19	98	19	35	39	35	136
HH-A300-6(8)SW	12	98	12	35	39	35	122

PERFORMANCE DATA

[HH-A15]

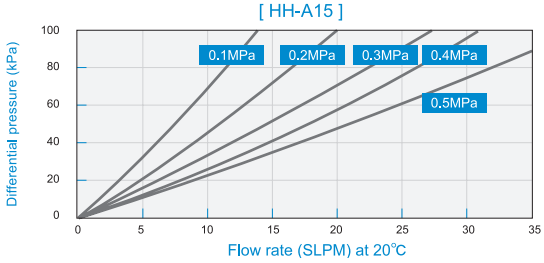

[HH-A60]

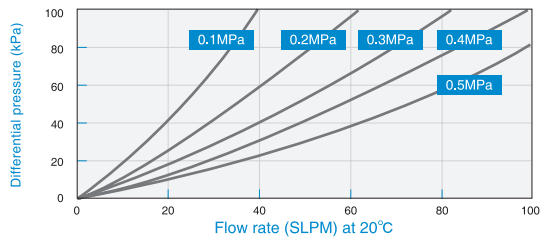

[HH-A120]

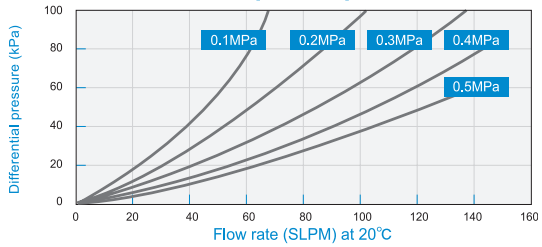

[HH-A200]

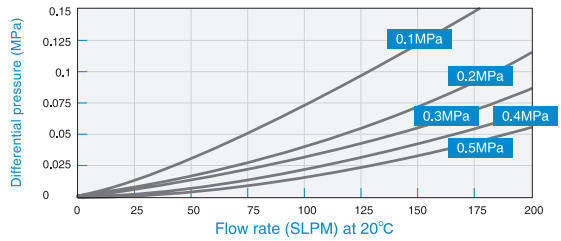

[HH-A300]

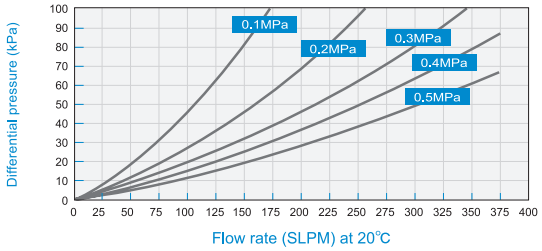

HASTELLOY GAS FILTER

HH-H SERIES

- Ultra-high purity in-line high flow gas filter
- All Hastelloy constructions
- High temperature and dynamic pressure applications
- Compact size and variable end connections

PRODUCT FEATURES

- Wide range flow rate from 100 to 800 SLPM
- Corrosion resistant Hastelloy body with excellent performance for either inert or corrosive gas applications
- 3 Nanometer particle filtering capability keeps up high flow efficiency with minimum pressure drop
- 5Ra electro-polished surface prevents internal contaminations
- Baked with hot nitrogen after DI water cleaning to meet semiconductor process standards
- Class 100 manufacturing, cleaning and packaging environment
- 100% helium leak tested

ORDERING INFORMATION

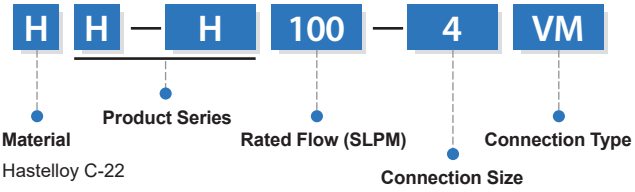

Size		Connection	
4	1/4″	VM	MFS male type
6	3/8″	SW	Lok type
8	1/2″		

SPECIFICATIONS

Removal Rating	≥ 0.0025μm	
Retention	Greater than 99.9999999% Removal of all particles down to 0.0025μm	
Rated Flow @ 10^9	100 SLPM (MAX 150SLPM)	
	150 SLPM (MAX 200SLPM)	
	600 SLPM (MAX 800SLPM)	
Materials	Filter element	Hastelloy C-276
	Electropolished housing	Hastelloy C-22
Operating Conditions	Maximum inlet pressure	12 MPa (122kgf/cm²) at 20°C
	Maximum differential pressure	10 MPa (101kgf/cm²) at 20°C
	Maximum operating temperature	460°C (Inert gas)
Helium Leak Rating	1 x 10^{-9} atm·cc/sec	
Surface Finish Interior	≤ Ra 5μinch	

DIMENSIONS

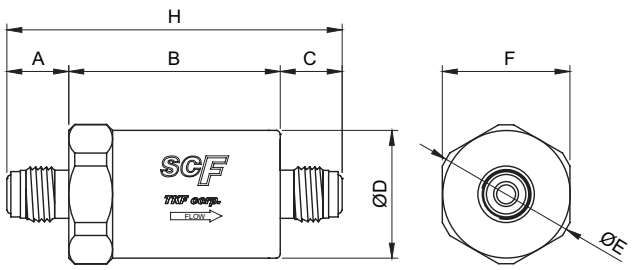

Part No.	A/mm	B/mm	C/mm	D/mm	E/mm	F/mm	H/mm
HH-H100-4VM	15.5	53	15.5	32	35	32	84
HH-H100-4SW	10.4	52.2	10.4	32	35	32	73
HH-H100-6(8)VM	19	53	19	32	35	32	91
HH-H100-6(8)SW	12	53	12	32	35	32	77
HH-H150-4VM	15.5	53	15.5	32	35	32	84
HH-H150-4SW	10.4	52.2	10.4	32	35	32	73
HH-H150-6(8)VM	19	53	19	32	35	32	91
HH-H150-6(8)SW	12	53	12	32	35	32	77
HH-H600-4VM	15.5	96	15.5	32	35	32	127
HH-H600-4SW	10.4	95.2	10.4	32	35	32	116
HH-H600-6(8)VM	19	96	19	32	35	32	134
HH-H600-6(8)SW	12	96	12	32	35	32	120

PERFORMANCE DATA

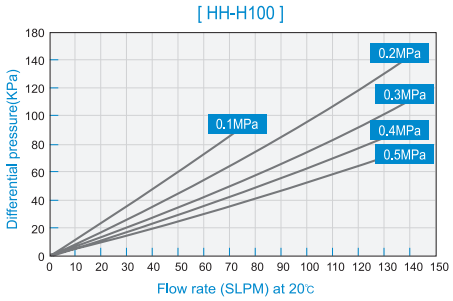

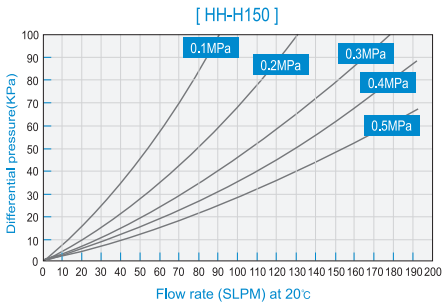

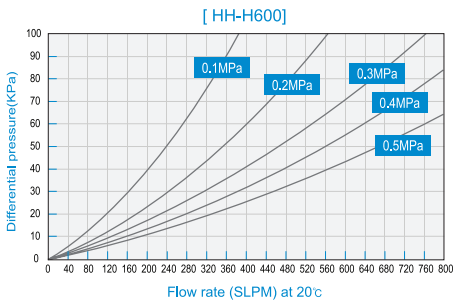

STAINLESS STEEL GAS FILTER

SS-A SERIES

- Ultra-high purity in-line gas filter
- All 316L stainless steel constructions
- High temperature and dynamic pressure applications
- Compact size and variable end connections

PRODUCT FEATURES

- Wide range flow rate from 15 to 300 SLPM
- Excellent compatibility with most high purity semiconductor process gases
- 3 Nanometer particle filtering capability keeps up high flow efficiency with minimum pressure drop
- 5Ra electro-polished surface prevents internal contaminations
- Baked with hot nitrogen after DI water cleaning to meet semiconductor process standards
- Class 100 manufacturing, cleaning and packaging environment
- 100% helium leak tested

ORDERING INFORMATION

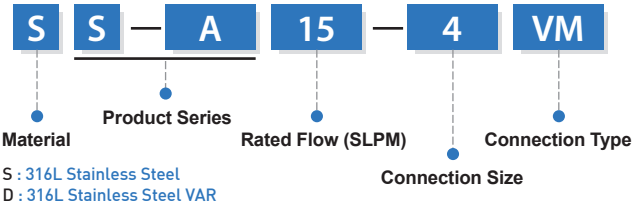

Size		Connection	
4	1/4″	VM	MFS male type
6	3/8″	SW	Lok type
8	1/2″		

SPECIFICATIONS

Removal Rating	≥ 0.0025μm	
Retention	Greater than 99.9999999% Removal of all particles down to 0.0025μm	
Rated Flow @ 10^9	15 SLPM	
	60 SLPM	
	120 SLPM	
	200 SLPM	
	300 SLPM	
Materials	Filter element	316L Stainless steel
	Electropolished housing	316L Stainless steel / 316L Stainless steel VAR
Element Operating Conditions	Maximum inlet pressure	21 MPa (210kgf/cm²) at 20°C
	Maximum differential pressure	15 MPa (153kgf/cm²) at 20°C
	Maximum operating temperature	460°C (Inert gas)
Helium Leak Rating	1 x 10^{-9} atm·cc/sec	
Surface Finish Interior	≤ Ra 5μinch	

DIMENSIONS

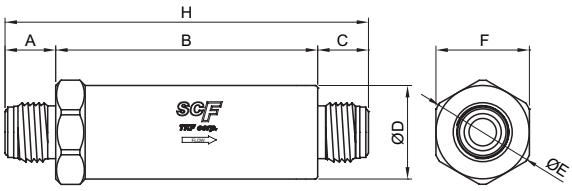

Part No.	A/mm	B/mm	C/mm	D/mm	E/mm	F/mm	H/mm
SS-A15-4VM	15.5	53	15.5	27.5	30	27	84
SS-A15-4SW	10.4	52.2	10.4	27.5	30	27	73
SS-A60-4VM	15.5	53	15.5	27.5	30	27	84
SS-A60-4SW	10.4	52.2	10.4	27.5	30	27	73
SS-A60-6(8)VM	19	53	19	27.5	30	27	91
SS-A120-4VM	15.5	96	15.5	29.5	33	30	127
SS-A120-4SW	10.4	95.2	10.4	29.5	33	30	116
SS-A120-6(8)VM	19	96	19	29.5	33	30	134
SS-A120-6(8)SW	12	96	12	29.5	33	30	120
SS-A200-4VM	15.5	98	15.5	35	39	35	129
SS-A200-4SW	10.4	97.2	10.4	35	39	35	118
SS-A200-6(8)VM	19	98	19	35	39	35	136
SS-A200-6(8)SW	12	98	12	35	39	35	122
SS-A300-4VM	15.5	98	15.5	35	39	35	129
SS-A300-4SW	10.4	97.2	10.4	35	39	35	118
SS-A300-6(8)VM	19	98	19	35	39	35	136
SS-A300-6(8)SW	12	98	12	35	39	35	122

PERFORMANCE DATA

[SS-A15]

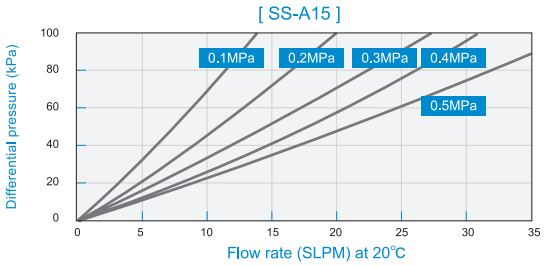

[SS-A60]

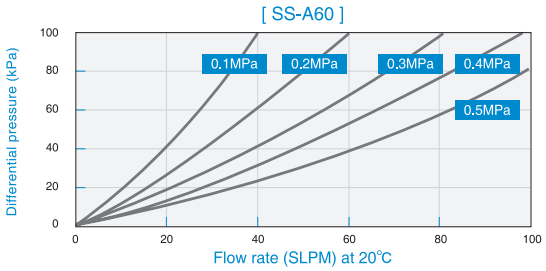

[SS-A120]

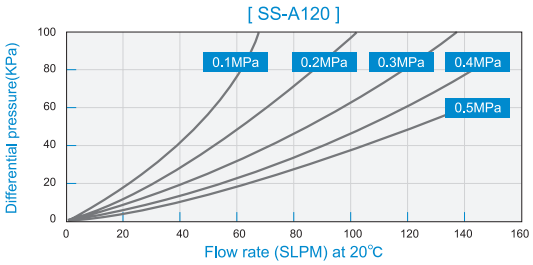

[SS-A200]

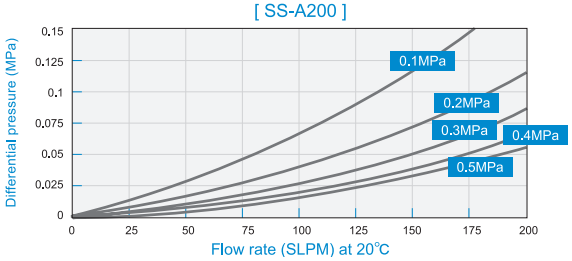

[SS-A300]

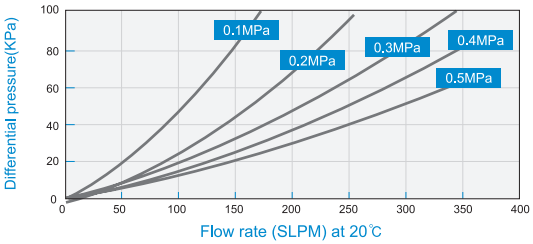

STAINLESS STEEL GAS FILTER

SS-C SERIES

- Ultra-high purity inline Gas filter
- All 316L Stainless steel constructions
- High temperature and dynamic pressure applications

PRODUCT FEATURES

- For high flow applications
- Excellent compatibility with most high purity semiconductor process gases
- 3 Nanometer particle filtering capability keeps up high flow efficeincy with minimum pressure drop
- 5Ra electro-polished surface prevents internal contaminations
- Baked with hot nitrogen after DI water cleaning to meet semiconductor process standards
- 100%helium leak tested

ORDERING INFORMATION

S S — C 1500 — 16 SW

- Material: S : 316L Stainless Steel
- Product Series
- Rated Flow (SLPM)
- Connection Size
- Connection Type

Size		Connection	
16	1"	SW	Lok type

SPECIFICATIONS

Max. Inlet Pressure		0.98MPa(10kg/cm²) @ 20°C
Removal Rating		≥ 0.0025 µinch
Particle Retention		99.9999999% Removal of all particles down to 0.0025 µinch
Temperature Range (Fluid)		Less than 460°C
		Less than 460°C
Materials	Housing	316L Stainless steel
		316L Stainless steel
	Element	Test pressure≤1x10-2 Torr Holding time ≥ 1min.
		≤1x10-9 atm·cc/sec
Leakage	External Leakage Allowance (He)	Test pressure≤1x10-2 Torr Holding time ≥ 1min.
		≤1x10-9 atm·cc/sec
Nominal DIA.		1"
Flow Rate		1500 SLPM
Connection Method		Lok
Products Grade	Grade	EP
	Inner Surface Roughness	Ry ≤ 0.7µinch 5µ Inch Ra (Avg.) Cut off Length : 0.25mm Measuring Length : 1.25mm
	Electropolishing	Electro Polishing Finish

DIMENSIONS

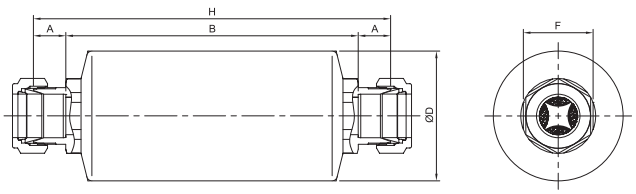

Part No.	A/mm	B/mm	C/mm	D/mm	F/mm	H/mm
SS-C1500-16SW	19	172	19	76.3	41	210
SS-C2000-16SW	19	172	19	76.3	41	210

STAINLESS STEEL GAS FILTER

SS-H SERIES

- Ultra-high purity in-line high flow gas filter
- All 316L stainless steel constructions
- High temperature and dynamic pressure applications
- Compact size and variable end connections

PRODUCT FEATURES

- Wide range flow rate from100 to 800 SLPM
- Excellent compatibility with most high purity semiconductor process gases
- 3 Nanometer particle filtering capability keeps up high flow efficiency with minimum pressure drop
- 5Ra electro-polished surface prevents internal contaminations
- Baked with hot nitrogen after DI water cleaning to meet semiconductor process standards
- Class 100 manufacturing, cleaning and packaging environment
- 100% helium leak tested

ORDERING INFORMATION

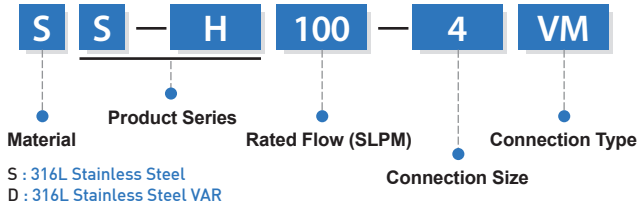

Size		Connection	
4	1/4″	VM	MFS male type
6	3/8″	SW	Lok type
8	1/2″		

SPECIFICATIONS

Removal Rating	≥ 0.0025μm	
Retention	Greater than 99.9999999% Removal of all particles down to 0.0025μm	
Rated Flow @ 10^9	100 SLPM (MAX 150SLPM)	
	150 SLPM (MAX 200SLPM)	
	600 SLPM (MAX 800SLPM)	
Materials	Filter element	316L Stainless steel
	Electropolished housing	316L Stainless steel / 316L Stainless steel VAR
Operating Conditions	Maximum inlet pressure	12 MPa (122kgf/cm²) at 20°C
	Maximum differential pressure	10 MPa (101kgf/cm²) at 20°C
	Maximum operating temperature	460°C (Inert gas)
Helium Leak Rating	1 x 10^{-9} atm·cc/sec	
Surface Finish Interior	≤ Ra 5μinch	

DIMENSIONS

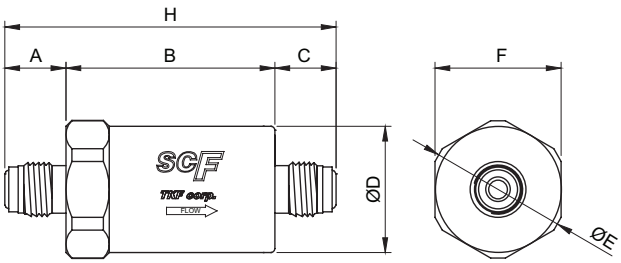

Part No.	A/mm	B/mm	C/mm	D/mm	E/mm	F/mm	H/mm
SS-H100-4VM	15.5	53	15.5	32	35	32	84
SS-H100-4SW	10.4	52.2	10.4	32	35	32	73
SS-H100-6(8)VM	19	53	19	32	35	32	91
SS-H100-6(8)SW	12	53	12	32	35	32	77
SS-H150-4VM	15.5	53	15.5	32	35	32	84
SS-H150-4SW	10.4	52.2	10.4	32	35	32	73
SS-H150-6(8)VM	19	53	19	32	35	32	91
SS-H150-6(8)SW	12	53	12	32	35	32	77
SS-H600-4VM	15.5	96	15.5	32	35	32	127
SS-H600-4SW	10.4	95.2	10.4	32	35	32	116
SS-H600-6(8)VM	19	96	19	32	35	32	134
SS-H600-6(8)SW	12	96	12	32	35	32	120

PERFORMANCE DATA

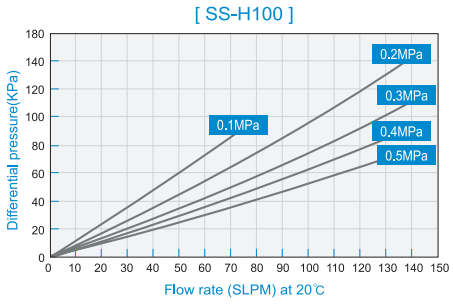

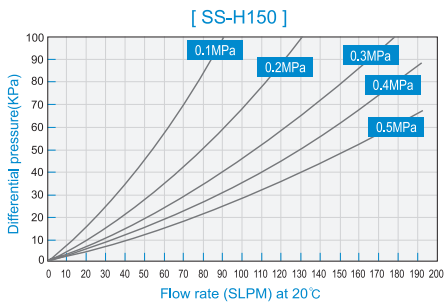

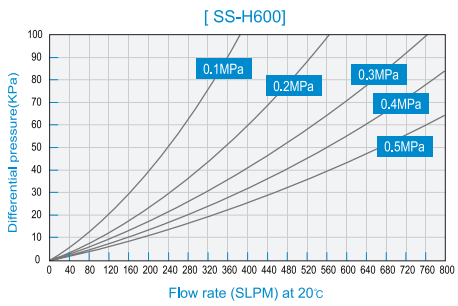

PTFE GAS FILTER

ST-A SERIES

- Ultra-high purity in-line gas filter
- All fluoropolymer filter element
- Electropolished 316L stainless steel housing

PRODUCT FEATURES

- PTFE element with superior corrosion resistance and excellent compatibility for most high purity semiconductor process gases
- 3 Nanometer particle filtering capability keeps up high flow efficiency with minimum pressure drop
- 5Ra electro-polished surface prevents internal contaminations
- Baked with hot nitrogen after DI water cleaning to meet semiconductor process standards
- Class 100 manufacturing, cleaning and packaging environment
- 100% helium leak tested

ORDERING INFORMATION

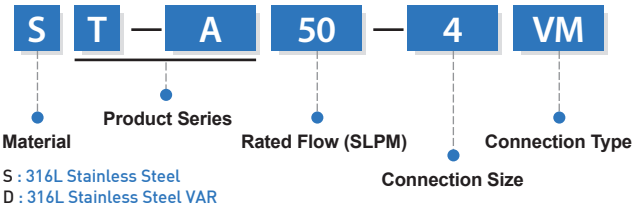

Size		Connection	
4	1/4″	VM	MFS male type
6	3/8″	SW	Lok type
8	1/2″		

SPECIFICATIONS

Removal Rating	≥ 0.0025μm	
Retention	Greater than 99.9999999% Removal of all particles down to 0.0025μm	
Rated Flow @ 10^9	50 SLPM	
	100 SLPM	
	150 SLPM	
Materials	Filter element / Support / O-ring	PTFE / PFA / PTFE
	Electropolished housing	316L Stainless steel / 316L Stainless steel VAR
Operating Conditions	Maximum inlet pressure	0.98 MPa (10kgf/cm^2) at 20°C
	Maximum differential pressure	0.4 MPa (4.2kgf/cm^2) at 20°C
	Maximum operating temperature	120°C (Inert gas)
Helium Leak Rating	1 x 10^{-9} atm·cc/sec	
Surface Finish Interior	≤ Ra 5μinch	

DIMENSIONS

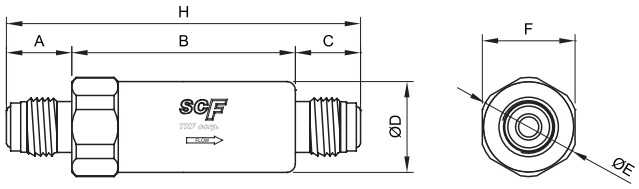

Part No.	A/mm	B/mm	C/mm	D/mm	E/mm	F/mm	H/mm
ST-A50-4VM	15.5	53	15.5	21.5	23.5	22	84
ST-A50-4SW	10.4	52.2	10.4	21.5	23.5	22	73
ST-A100-4VM	15.5	96	15.5	26.5	30	27	127
ST-A100-4SW	10.4	95.2	10.4	26.5	30	27	116
ST-A100-6(8)VM	19	96	19	26.5	30	27	134
ST-A100-6(8)SW	12	96	12	26.5	30	27	120
ST-A150-4VM	15.5	96	15.5	26.5	30	27	127
ST-A150-4SW	10.4	95.2	10.4	26.5	30	27	116
ST-A150-6(8)VM	19	96	19	26.5	30	27	134
ST-A150-6(8)SW	12	96	12	26.5	30	27	120

PERFORMANCE DATA

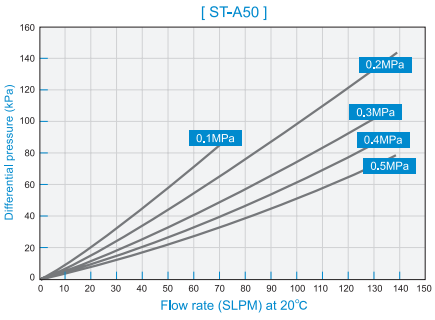

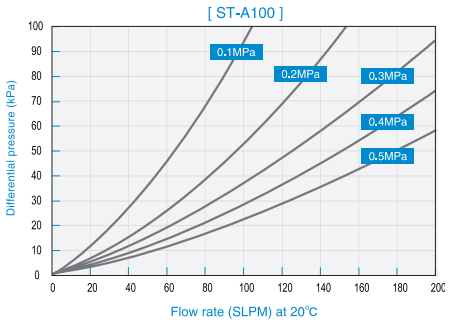

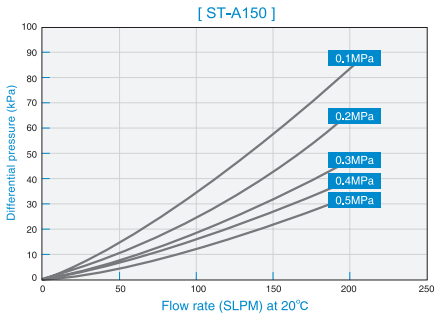

PTFE GAS FILTER

ST-B SERIES

- Ultra-high purity in-line gas filter
- All fluoropolymer filter element
- Electropolished 316L stainless steel housing

PRODUCT FEATURES

- PTFE element with superior corrosion resistance and excellent compatibility for most high purity semiconductor process gases
- 3 Nanometer particle filtering capability keeps up high flow efficiency with minimum pressure drop
- 5Ra electro-polished surface prevents internal contaminations
- Baked with hot nitrogen after DI water cleaning to meet semiconductor process standards
- Class 100 manufacturing, cleaning and packaging environment
- 100% helium leak tested

ORDERING INFORMATION

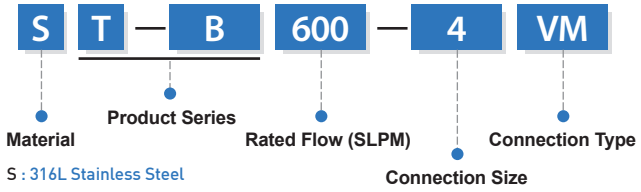

Size		Connection	
4	1/4″	VM	MFS male type
6	3/8″	SW	Lok type
8	1/2″		

SPECIFICATIONS

Removal Rating	≥ 0.0025μm	
Retention	Greater than 99.9999999% Removal of all particles down to 0.0025μm	
Rated Flow @ 10^9	600 SLPM (MAX 1000SLPM)	
Materials	Filter element / Support / O-ring	PTFE / PFA / FKM
	Electropolished housing	316L Stainless steel / 316L Stainless steel VAR
Operating Conditions	Maximum inlet pressure	0.98 MPa (10kgf/cm^2) at 20°C
	Maximum differential pressure	0.4 MPa (4.2kgf/cm^2) at 20°C
	Maximum operating temperature	120°C (Inert gas)
Helium Leak Rating	1 x 10^{-9} atm·cc/sec	
Surface Finish Interior	≤ Ra 5μinch	

DIMENSIONS

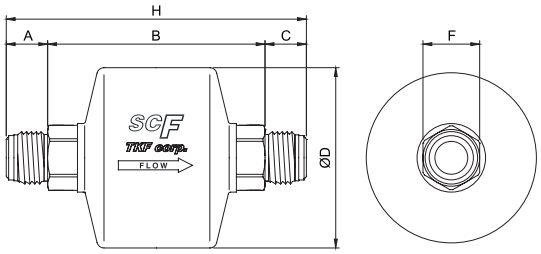

Part No.	A/mm	B/mm	C/mm	D/mm	F/mm	H/mm
ST-B600-4VM	15.5	96	15.5	76.3	24	127
ST-B600-4SW	10.4	92.2	10.4	76.3	24	113
ST-B600-6(8)VM	19	89	19	76.3	24	127
ST-B600-6(8)SW	12	89	19	76.3	24	113
ST-B600-12VM	25.5	82	25.5	76.3	36	133
ST-B600-12SW	17	82	17	76.3	36	116

PERFORMANCE DATA

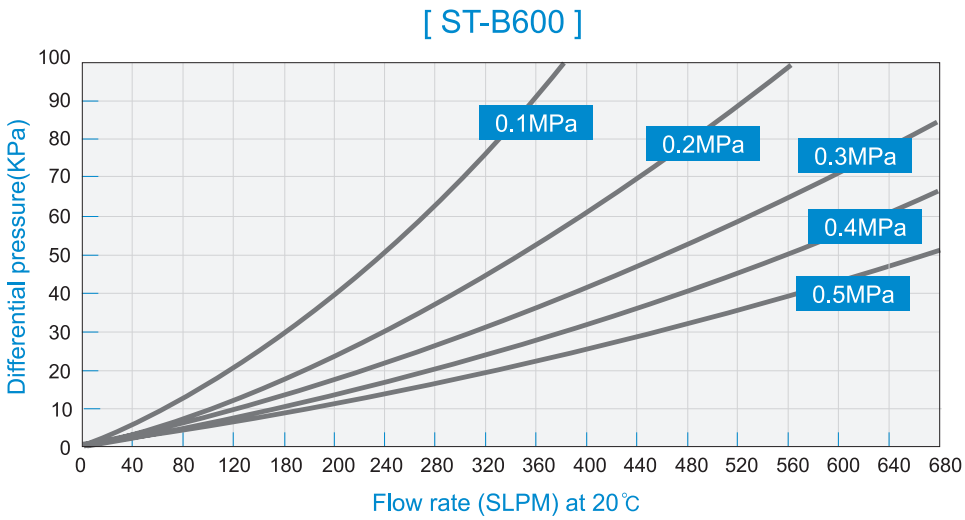

PTFE GAS FILTER

ST-C SERIES

- Ultra-high purity in-line gas filter
- All fluoropolymer filter element
- Electropolished 316L stainless steel housing

PRODUCT FEATURES

- PTFE element with superior corrosion resistance and excellent compatibility for most high purity semiconductor process gases
- 3 Nanometer particle filtering capability keeps up high flow efficiency with minimum pressure drop
- 5Ra electro-polished surface prevents internal contaminations
- Baked with hot nitrogen after DI water cleaning to meet semiconductor process standards
- Class 100 manufacturing, cleaning and packaging environment
- 100% helium leak tested

ORDERING INFORMATION

S | T — C | 1500 — 6 | VM

- **Material**: S : 316L Stainless Steel
- **Product Series**: T — C
- **Rated Flow (SLPM)**: 1500
- **Connection Size**: 6
- **Connection Type**: VM

Size		Connection	
6	3/8″	VM	MFS male type
8	1/2″	SW	Lok type
		A	Tube size
		TW	Butt Weld type

SPECIFICATIONS

Removal Rating	≥ 0.0025μm	
Retention	Greater than 99.9999999% Removal of all particles down to 0.0025μm	
Rated Flow @ 10^9	1500 SLPM, 2000 SLPM, 2500 SLPM, 3500 SLPM, 7500 SLPM	
Materials	Filter element / Support / O-ring	PTFE / PP / FKM
	Electropolished housing	316L Stainless steel / 316L Stainless steel VAR
Operating Conditions	Maximum inlet pressure	0.98 MPa (10kgf/cm^2) at 20°C
	Maximum differential pressure	0.4 MPa (4.2kgf/cm^2) at 20°C
	Maximum operating temperature	100°C (Inert gas)
Helium Leak Rating	1 x 10^{-9} atm·cc/sec	
Surface Finish Interior	≤ Ra 5μinch	

DIMENSIONS

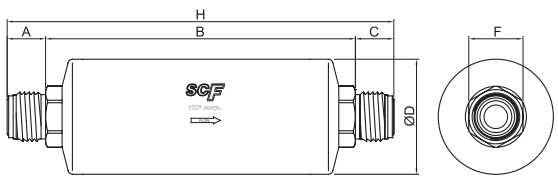

Part No.	A/mm	B/mm	C/mm	D/mm	F/mm	H/mm
ST-C1500-6(8)VM	19	198	19	76.3	24	236
ST-C1500-8SW	12	198	12	76.3	24	223
ST-C1500-12VM	25.5	205.6	25.5	76.3	36	256.6
ST-C1500-12SW	17	205.6	17	76.3	36	239.6
ST-C1500-8TW	56.2	183	56.2	76	-	295
ST-C1500-15A	48.5	184	48.5	76.6	-	281
ST-C2000-15A	48.5	184	48.5	76.2	-	281
ST-C2500-20A	70	303.5	70	89.1	-	443.5
ST-C3500-25A	70	310	70	89.1	-	450
ST-C7500-40A	70	551	70	89.1	-	691

PERFORMANCE DATA

[ST-C1500]

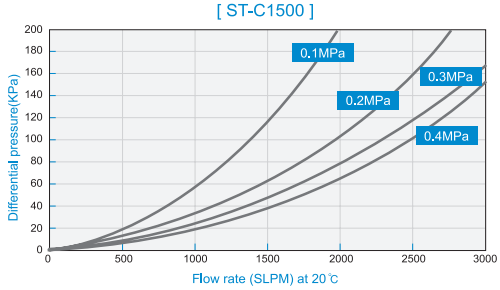

[ST-C2000]

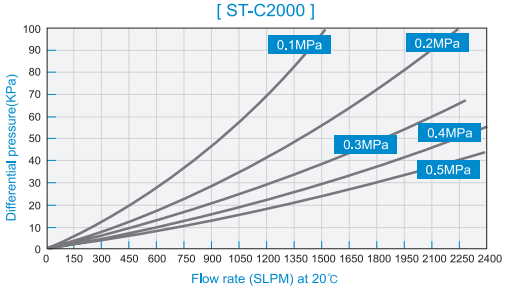

[ST-C2500]

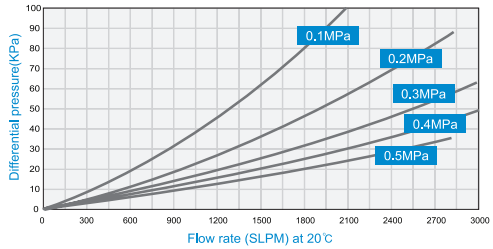

[ST-C3500]

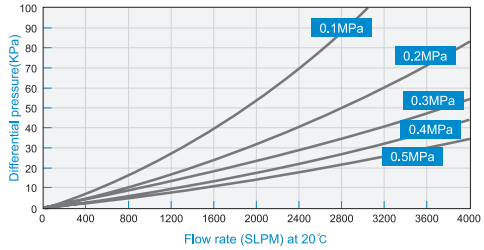

[ST-C7500]

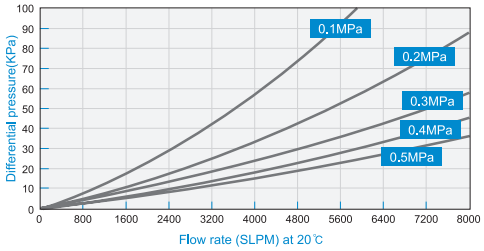

PTFE GAS FILTER

ST-H MAX SERIES

- Ultra-high purity max in-line gas filter
- All fluoropolymer filter element
- Electropolished 316L stainless steel housing

PRODUCT FEATURES

- PTFE element with superior corrosion resistance and excellent compatibility for most high purity semiconductor process gases
- 3 Nanometer particle filtering capability keeps up high flow efficiency with Low pressure drop
- 5Ra electro-polished surface prevents internal contaminations
- Baked with hot nitrogen after DI water cleaning to meet semiconductor process standards
- Class 100 manufacturing, cleaning and packaging environment
- 100% helium leak tested

ORDERING INFORMATION

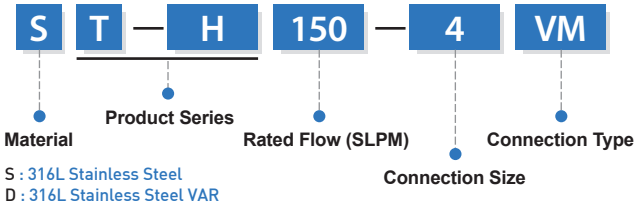

Size		Connection	
4	1/4″	VM	MFS male type
6	3/8″	SW	Lok type
8	1/2″		

SPECIFICATIONS

Removal Rating	≥ 0.0025μm	
Retention	Greater than 99.9999999% Removal of all particles down to 0.0025μm	
Rated Flow @ 10^9	150 SLPM (Max 200 SLPM)	
	300 SLPM (Max 400 SLPM)	
Materials	Filter element / Support / O-ring	PTFE / PFA / PTFE
	Electropolished housing	316L Stainless steel / 316L Stainless steel VAR
Operating Conditions	Maximum inlet pressure	0.98 MPa (10kgf/cm^2) at 20°C
	Maximum differential pressure	0.4 MPa (4.2kgf/cm^2) at 20°C
	Maximum operating temperature	120°C (Inert gas)
Helium Leak Rating	1 x 10^{-9} atm·cc/sec	
Surface Finish Interior	≤ Ra 5μinch	

DIMENSIONS

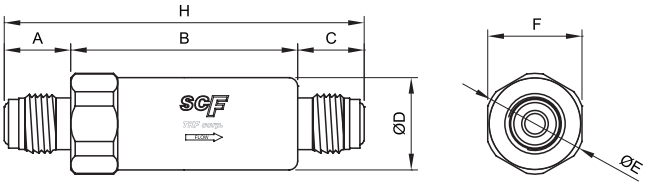

Part No.	A/mm	B/mm	C/mm	D/mm	E/mm	F/mm	H/mm
ST-H150-4VM	15.5	53	15.5	21.5	23.5	22	84
ST-H150-4SW	10.4	52.2	10.4	21.5	23.5	22	73
ST-H300-6(8)VM	19	96	19	26.5	30	27	134
ST-H300-6(8)SW	12	96	12	26.5	30	27	120

PERFORMANCE DATA

[ST-H MAX150]

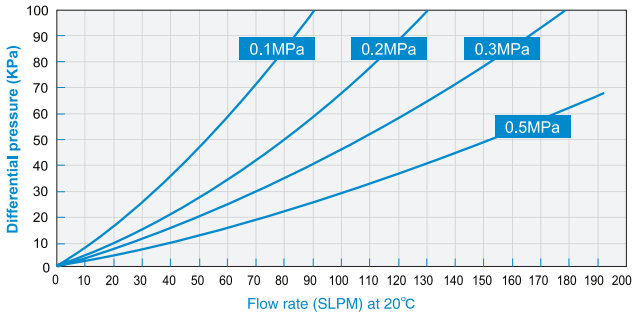

[ST-H MAX300]

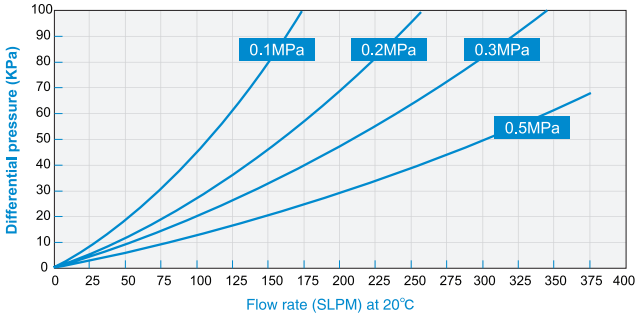

IGS GAS FILTER

METAL SERIES

- Ultra-high purity Metal Mini gas filter
- All 316L stainless steel constructions
- High temperature and dynamic pressure applications
- Compact size and high reliability on shock or vibration

PRODUCT FEATURES

- Wide range flow rate from30 to 120 SLPM
- Excellent compatibility with most high purity semiconductor process gases
- 3 Nanometer particle filtering capability keeps up high flow efficiency with minimum pressure drop
- 5Ra electro-polished surface prevents internal contaminations
- Baked with hot nitrogen after DI water cleaning to meet semiconductor process standards
- Class 100 manufacturing,cleaning and packaging environment
- 100% helium leak tested

ORDERING INFORMATION

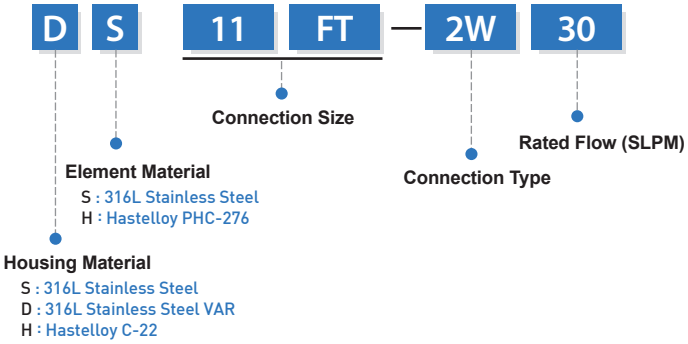

Size		Connection	
11	1.125″	W, WS	W-Seal
15	1.5″	C	C-Seal
159	1.59"		

SPECIFICATIONS

Removal Rating	≥ 0.0025μm	
Retention	Greater than 99.9999999% Removal of all particles down to 0.0025μm	
Rated Flow @ 10^9	30 SLPM	
	60 SLPM	
	120 SLPM	
Materials	Filter element	316L Stainless steel, Hastelloy C276
	Electropolished housing	316L Stainless steel / 316L Stainless steel VAR, Hastelloy C22
Operating Conditions	Maximum inlet pressure	0.98 MPa (10kgf/cm²) at 20°C
	Maximum differential pressure	0.7 MPa (7kgf/cm²) at 20°C
	Maximum operating temperature	460°C (Inert gas)
Helium Leak Rating	1 x 10^{-9} atm·cc/sec	
Surface Finish Interior	≤ Ra 5μinch	

DIMENSIONS

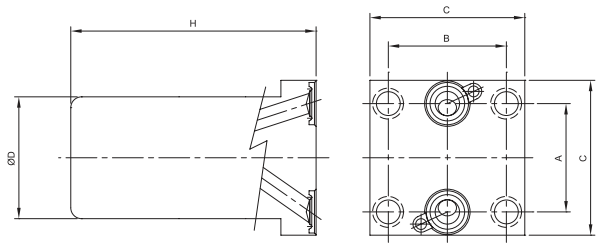

Size	Seal Type	Part Number	A/mm	B/mm	C/mm	D/mm	H/mm
1.125″	W-Seal	DS11FT-2W-30	20	21.8	28.6	21.5	45.5
		DS11FT-2W-60	20	21.8	28.6	21.5	58.5
		DS11FT-2W-120	20	21.8	28.6	27.5	109
	C-Seal	DS11FT-2C-30	21.8	21.8	28.6	21.5	45.5
		DS11FT-2C-60	21.8	21.8	28.6	21.5	58.5
1.5″	W-Seal	DS15FT-2W-30	26	30	39	27.5	51
		DS15FT-2W-60	26	30	39	27.5	62
		DS15FT-2W-120	26	30	39	27.5	97.5
		DH15FT-2W-120	26	30	39	27.5	97.5
	C-Seal	DS15FT-2C-30	30.2	30.2	39	27.5	62
		DS15FT-2C-60	30.2	30.2	39	27.5	97.5
1.59"	W-Seal	DH159FT-2WS-120	18	42	37 x 55	27.5	97.5

PERFORMANCE DATA

[DS11FT(15FT)-2W-30]

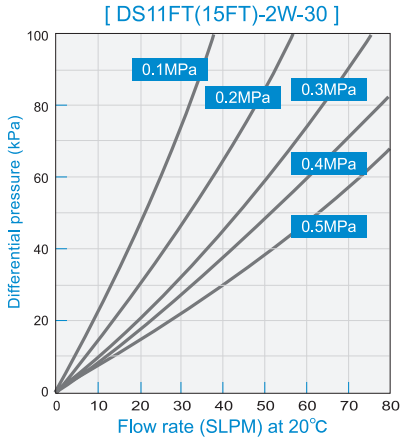

[DS11FT(15FT)-2W-60]

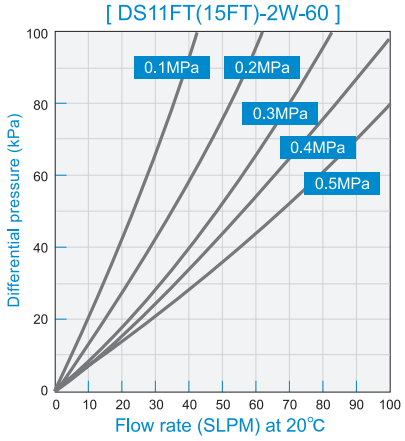

[DS11FT(15FT)-2W-120]

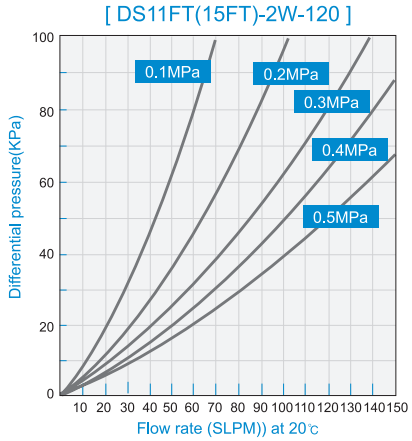

GAS DIFFUSER

METAL SERIES

- Ultra-high purity Metal Gas Diffuser
- 316L Stainless steel element
- High temperature applications
- Compact size and high reliability on shock or vibration

PRODUCT FEATURES

- Wide range flow rate from 60 to 300 SLPM
- Excellent compatibility with most high purity semiconductor process gases
- 3 Nanometer particle filtering capability keeps up high flow efficiency with minimum pressure drop
- 5Ra electro-polished surface prevents internal contaminations
- Baked with hot nitrogen after DI water cleaning to meet semiconductor process standards
- 100%helium leak tested

ORDERING INFORMATION

S G D — A 50 — 4 VM

- **S** — Housing material
  - S : 316L Stainless Steel
  - D : 316L Stainless Steel VAR
- **G D — A** — Product Series
- **50** — Element Size
- **4** — Connection Size
- **VM** — Connection Type

Size		Connection	
4	1/4″	VM	MFS male type
6	3/8″	NW25X8VM	NW25 flange type
8	1/2″		

SPECIFICATIONS

Removal Rating		≥ 0.0025μm
Retention		Greater than 99.9999999% Removal of all particles down to 0.0025μm
Rated Flow @ 10^9		70SLPM (A50)
		60SLPM (B40)
		80SLPM (B70)
		90SLPM (B74)
		300SLPM (C80)
		100SLPM (NW25X8VM)
Materials	Filter Element	316L Stainless Steel
	Housing	316L Stainless Steel / 316L VAR Stainless Steel
Element Operating Conditions	Maximum inlet pressure	1Mpa
	Maximum Operating Temperature	460°C
Surface Finish Interior		≤ Ra 10μin(BA) / ≤ Ra 5μin(EP)

DIMENSIONS

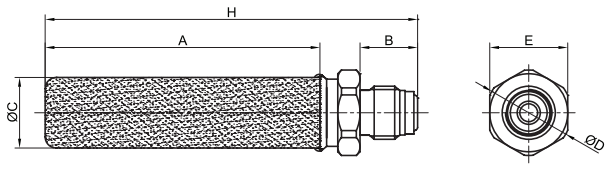

Series	Size	Part Number	A/mm	B/mm	C/mm	D/mm	E/mm	H/mm
SGD-A	3/8″	GD-A50-6VM	50	19	13	27	24	81.5
SGD-B	1/4″	GD-B40-4VM	40	15.5	19	23	21	66.3
		GD-B70-4VM	70	15.5	19	23	21	96.3
		GD-B74-4VM	74	15.5	19	23	21	100.3
	1/2″	GD-B74-NW25X8VM	74	39.4	19	40	23.8	123.4
SGD-C	1/2″	GD-C80-8VM	80	19	24	27	24	110.8

PERFORMANCE DATA

[SGD-B40-4VM Performance Data]

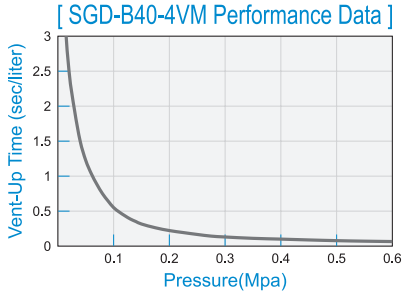

[SGD-C80-8VM Performance Data]

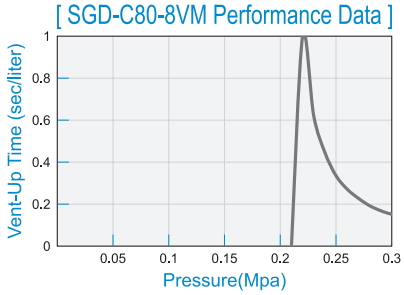

[SGD-B70-4VM Performance Data]

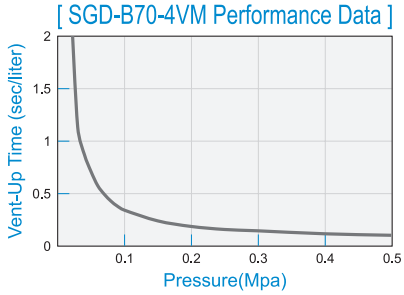

[SGD-A50-6VM Performance Data]

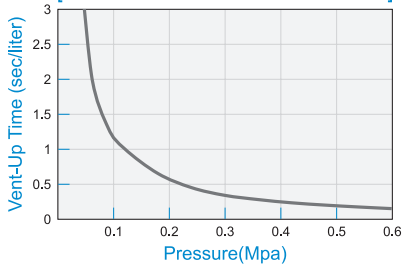

[SGD-B74-4VM Performance Data]

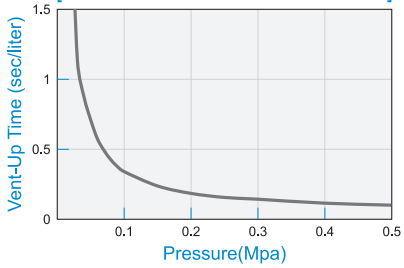

[SGD-B74-NW25X8VM Performance Data]

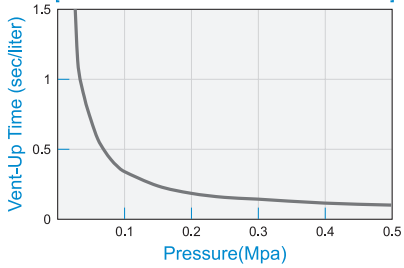

GASKET FILTER

IGS SERIES

PRODUCT FEATURES

- 3 Nanometer particle filtering capability keeps up high flow efficiency with minimum pressure drop
- Gasket surface finish on gas wetted surface is 5μm in Ra with electro polishing
- Baked with hot nitrogen after DI water cleaning to meet semiconductor process standards
- Class 100 manufacturing, cleaning and packaging environment

ORDERING INFORMATION

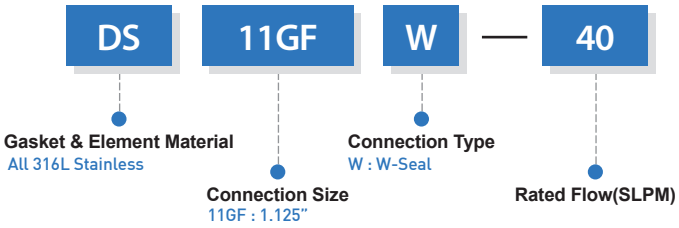

SPECIFICATIONS

Removal Rating	≥ 0.0025μm
Retention	Greater than 99.9999999% Removal of all particles down to 0.0025μm
Rated Flow @ 10^9	40 SLPM
Max. Operating Temperature	460℃
Surface Finish Interior	≥ Ra 5μinch

DIMENSIONS

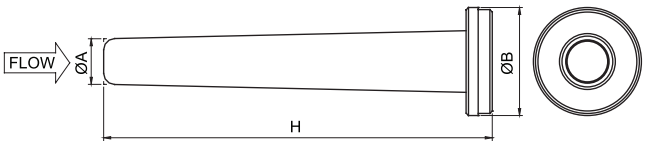

Size	Seal Type	Part Number	A/mm	B/mm	H/mm
1.125"	W-Seal	DS11GFW-40	(3.25)	7.7	27.6

PERFORMANCE DATA

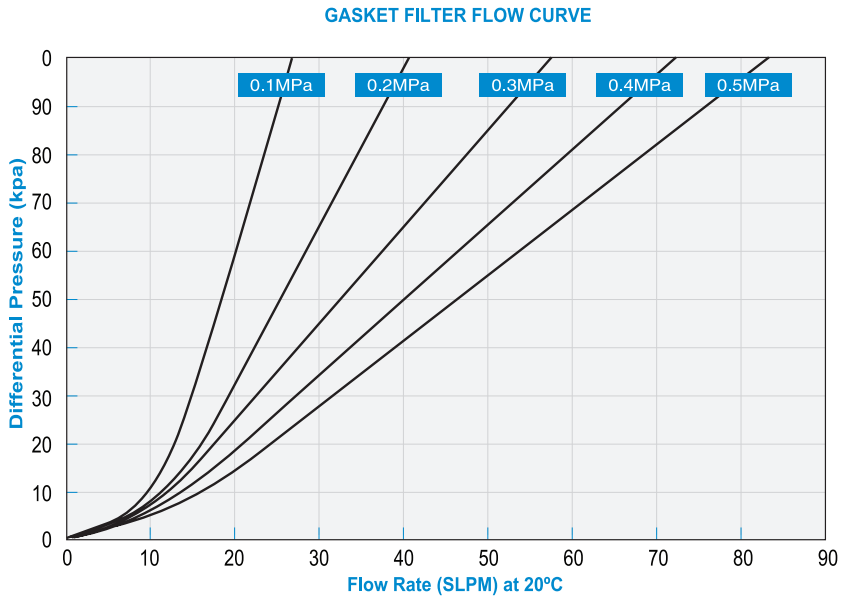

GASKET FILTER

MFS SERIES

PRODUCT FEATURES

- 3 Nanometer particle filtering capability keeps up high flow efficiency with minimum pressure drop
- Gasket surface finish on gas wetted surface is 5μm in Ra with electro polishing
- Baked with hot nitrogen after DI water cleaning to meet semiconductor process standards
- Class 100 manufacturing, cleaning and packaging environment

ORDERING INFORMATION

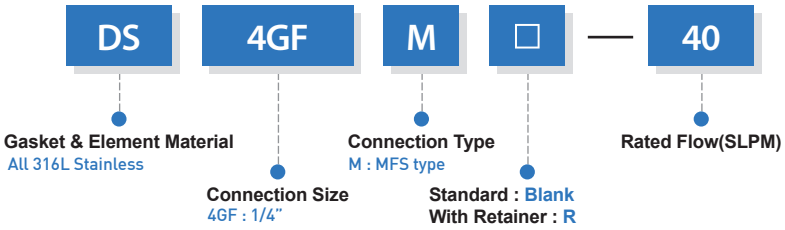

SPECIFICATIONS

Removal Rating	≥ 0.0025μm
Retention	Greater than 99.9999999% Removal of all particles down to 0.0025μm
Rated Flow @ 10^9	40 SLPM
Max. Operating Temperature	460℃
Surface Finish Interior	≥ Ra 5μinch

DIMENSIONS

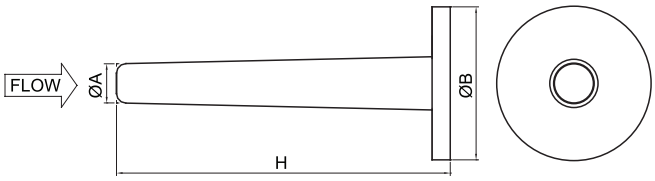

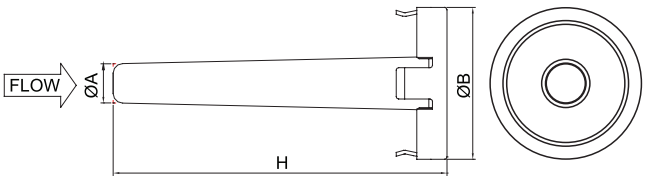

Size	Seal Type	Part Number	A/mm	B/mm	H/mm
1/4″	MFS Type	D4GFM-40	(3.25)	12.7	27.6

Size	Seal Type	Part Number	A/mm	B/mm	H/mm
1/4″	MFS Type	D4GFMR-40	(3.25)	12.6	27.6

PERFORMANCE DATA

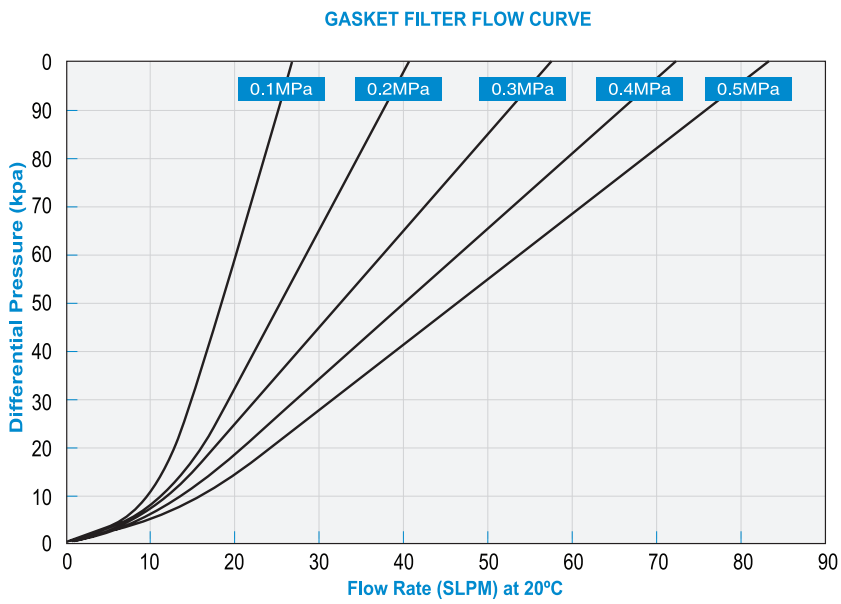

IGS(Integrated Gas System)

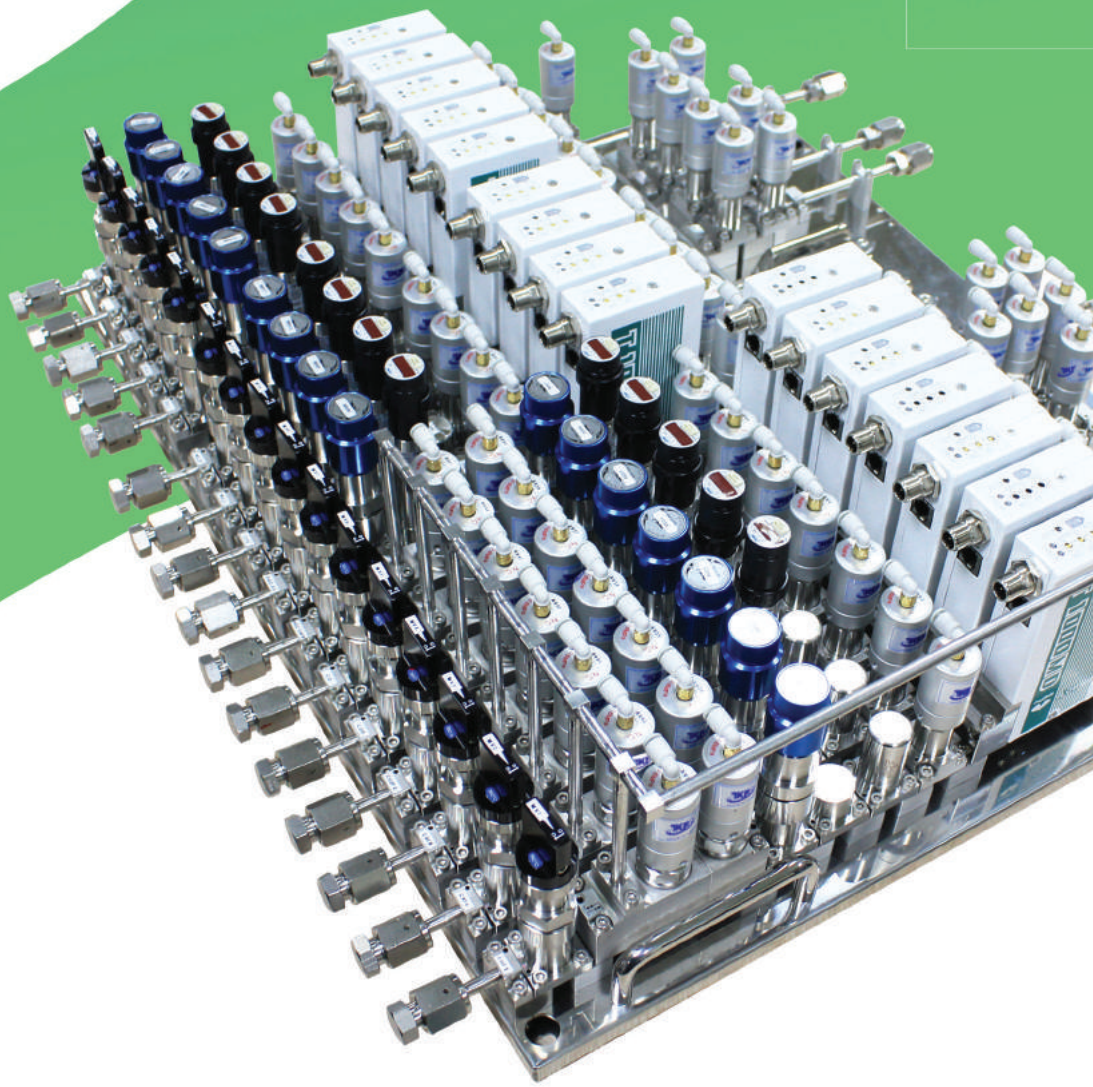

TK-FUJIKIN CORPORATION

Fujikin Carp Group

1. IGS CONCEPT

1.1 IGS DEFINITION

Abbreviated form of Integrated Gas System.

- Spatial effectiveness and ease of installation and maintenance yet accommodating the functionality of conventional VCR type by engineering the layout in block structure.

1.2 IGS ADVANTAGES

1. MINIATURIZATION

- One third the size of conventional gas panels

VCR TYPE	IGS 1.125" W-SEAL TYPE
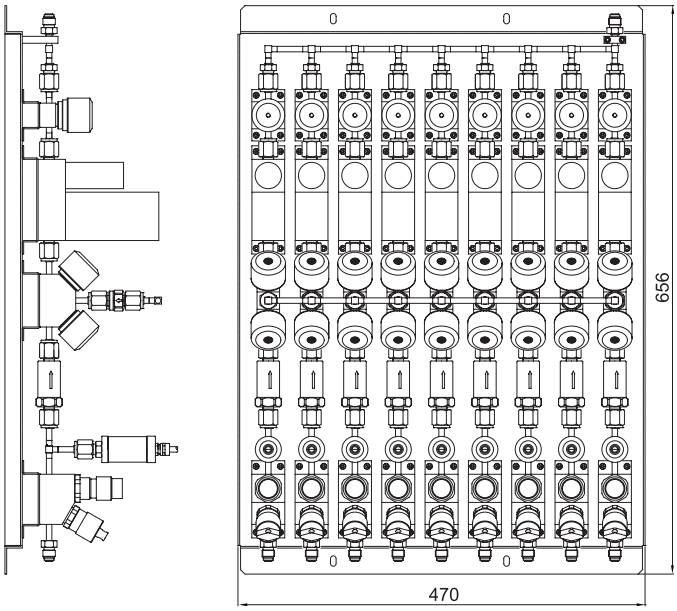	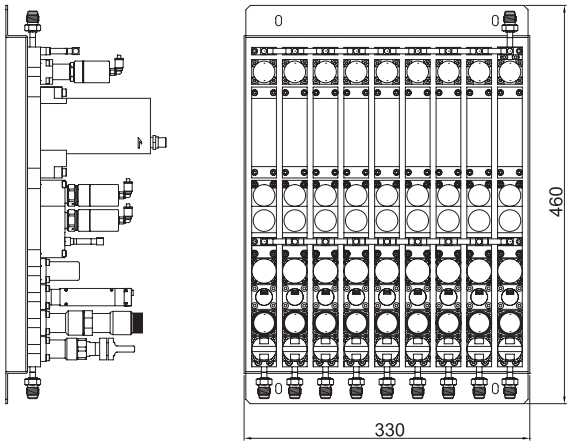
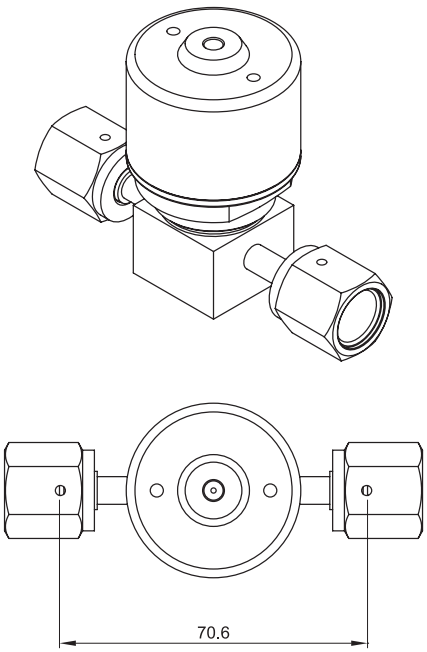	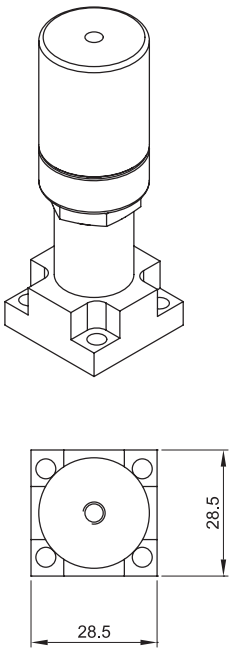

2. SUPERIOR RELIABILITY

- W-Seal : Sealing Faces Independent of Component(s) Receiving External Forces

- Leveling System : IGS baseblocks are completely isolated from the baseplate by means of sleeves and rubber bushings, a tight seal is also always maintained.

- Silver -Plated Cap Bolts : Able to endure 100 or more connect/disconnect cycles
  Silver-plated bolts should always be used when mountingcomponents to prevent galling.

3. EASY INSTALLATION AND MAINTENANCE

- Top Mounting Method : Allow for assembly and removal of components in one direction

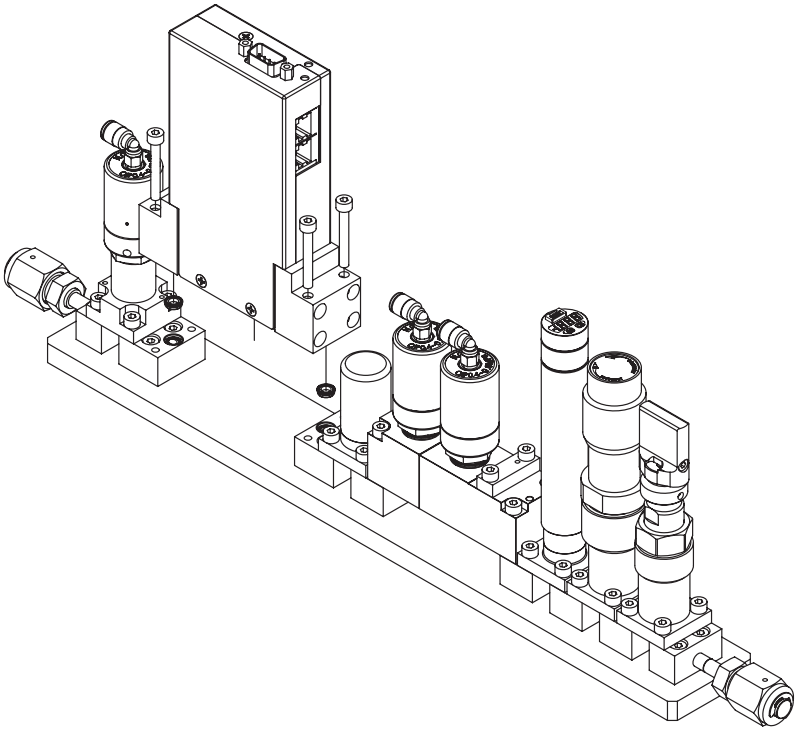

- All leak detection ports are vertical ,enabling leak detection with pinpoint accuracy
- Simple installation.
- Exclusive clenching system prevents bolts from dropping out during installation or maintenance

1.3 IGS GAS PANEL CONFIGURATION

1. FLOW CHART DESIGN

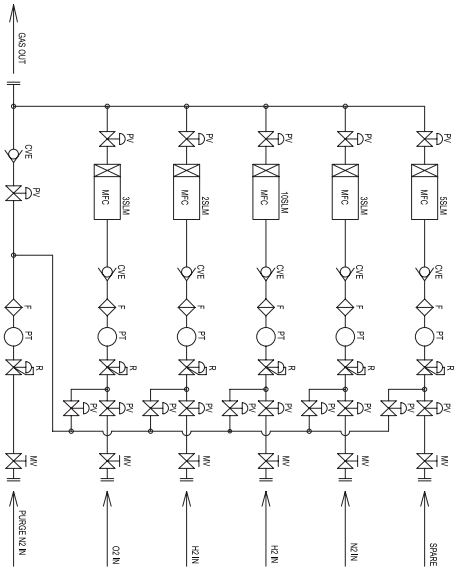

2. COMPONENT SELECTING

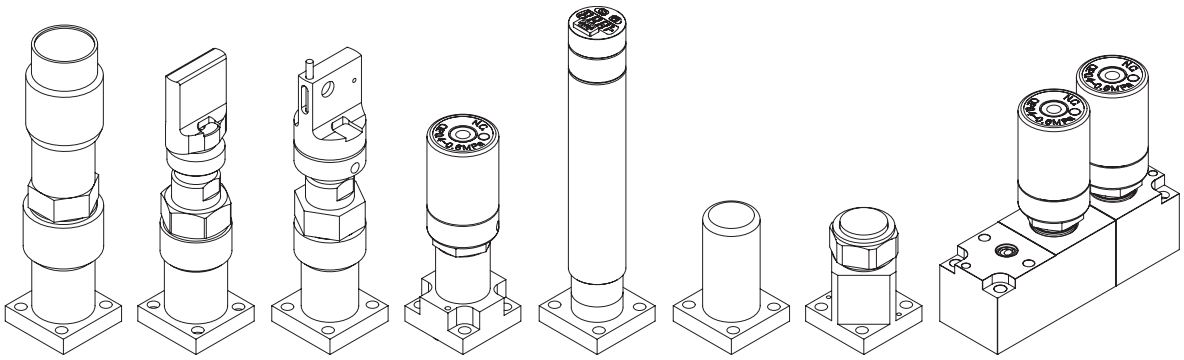

3. 2D DRAWING CREATE

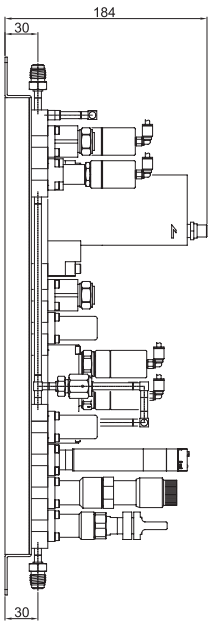

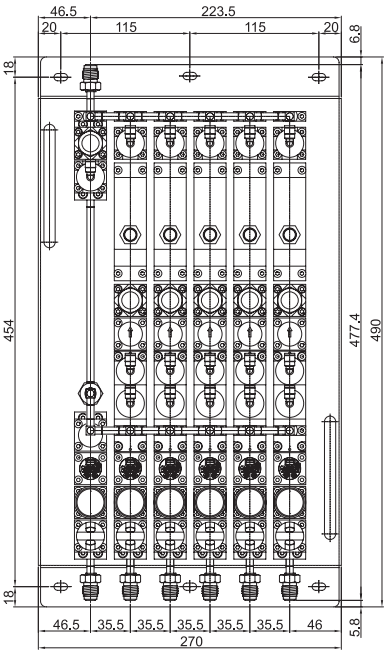

4. BASE BLOCK ASSEMBLY

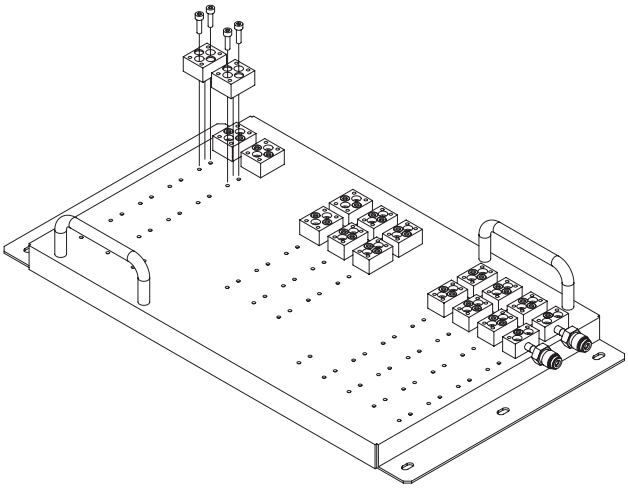

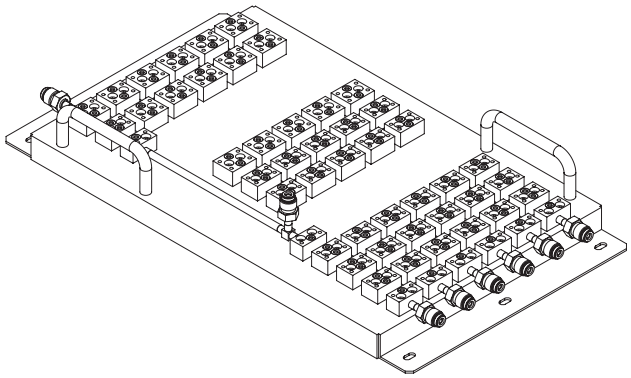

5. MOUNTING COMPONENT

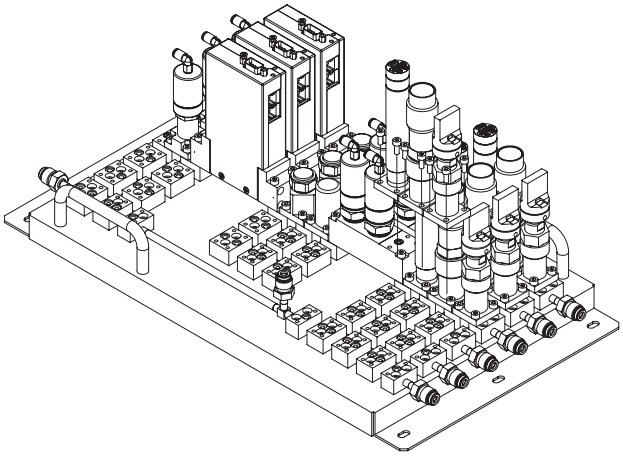

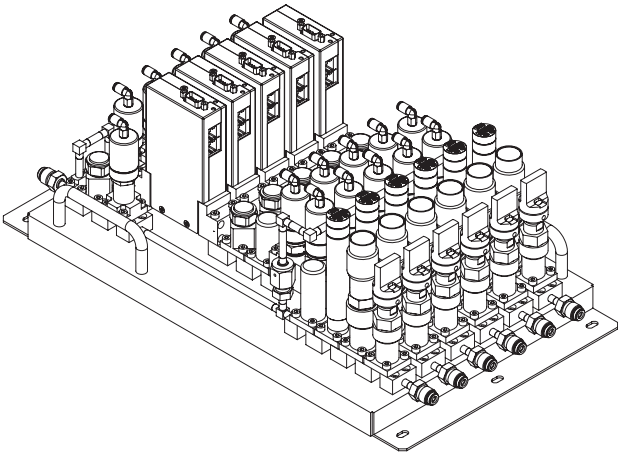

2. TK-FUJIKIN IGS SEAL TYPE

SEAL TYPE	SIZE	SPEC.
W-Seal	1.125″	SEMI Compliant Design F82~F95
	1.5″	
C-Seal	1.125″	
	1.5″	

3. IGS PANEL COMPONENTS

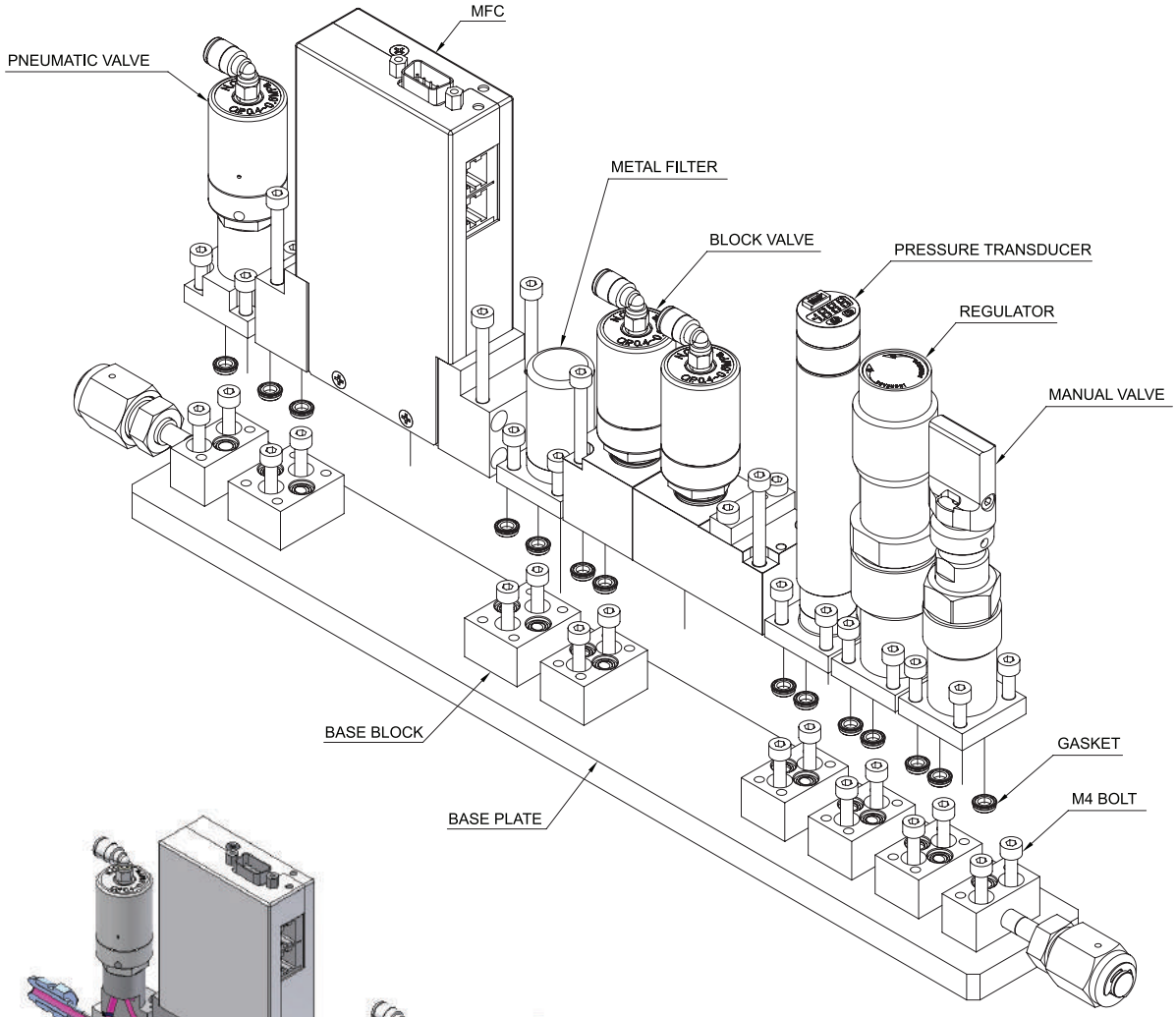

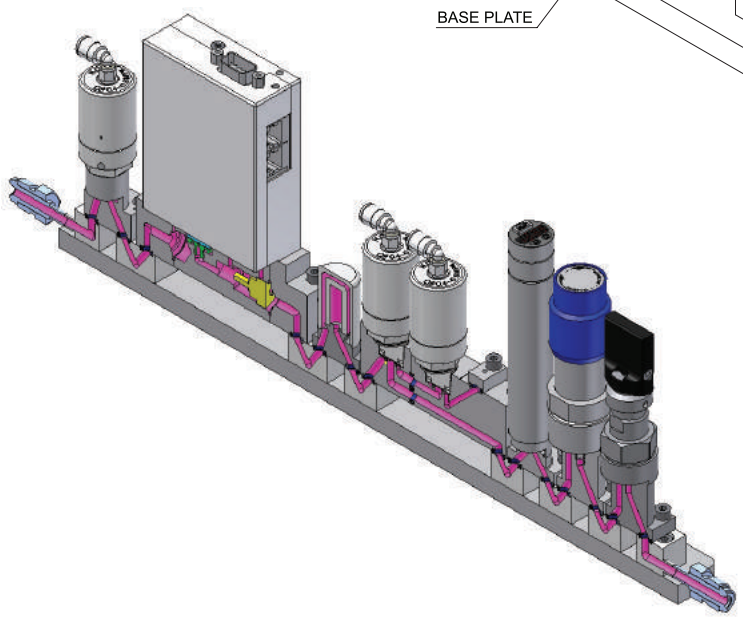

4. TK-FUJIKIN IGS COMPONENTS

4.1 MANUAL VALVE - SHUTOFF TYPE

MAJOR SPECIFICATIONS

Max. Working Pressure (G.)	1MPa
Max. Working Temp.	-10 ~ 80℃ (PCTFE) -10 ~ 150℃ (PFA)
Cv	0.2
Internal, External Leakage Allowance (He) Test Pressure ≤ 1×10^{-2} Torr Holding Time ≥ 1 min.	$1x10^{-10}$ Pa · m^3/s
Seat Across Leakage Allowance (He) Test Pressure ≤ 1×10^{-2} Torr Holding Time ≥ 15 sec.	$1x10^{-10}$ Pa · m^3/s
Particle Inspection Pressure : 60 ~ 80psi N2 Gas Sample Volume : 1CFM 0.1μm and Larger	No count
Inner Surface Roughness	Ry ≤ 0.7μm 5 μinch Ra(Avg.)

MATERIAL

Body	Diaphragm	Seat	Handle
316L Stainless Steel VAR	Ni - Co Alloy	PCTFE, PFA	AL

DIMENSIONS

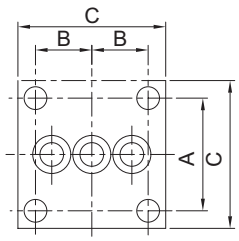

C-SEAL 3 PORT
BOTTOM VIEW

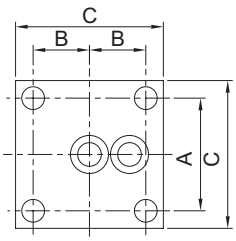

C-SEAL 2 PORT
BOTTOM VIEW

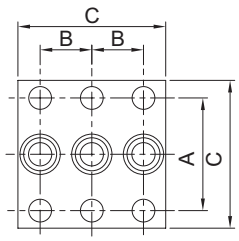

W-SEAL 3 PORT
BOTTOM VIEW

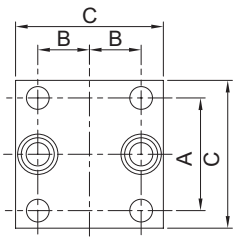

W-SEAL 2 PORT
BOTTOM VIEW

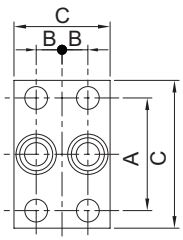

W-SEAL 2 PORT
BOTTOM VIEW

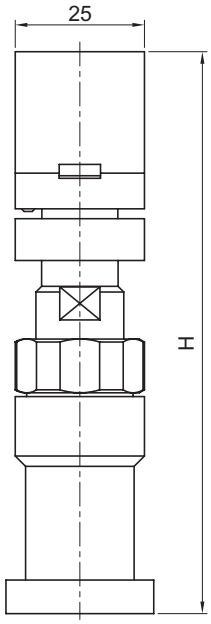

Size	Seal Type	Port	Part Number	A	B	C	H
1.125″	W-Seal	2	11NSODVK - 2W	21.8	10	28.6	108
		3	11NSODVK - 3W3T12	21.8	10	28.6	108
	C-Seal	2	11NSODVK - 2C	21.8	10.9	28.6	106.2
		3	11NSODVK - 3C3T12	21.8	10.9	28.6	106.2
1.5″	W-Seal	2	15NSODVK - 2WS	30	6.5	26	108
		2	15NSODVK - 2W	30	13	39	108
		3	15NSODVK - 3W3T12	30	13	39	108
	C-Seal	2	15NSODVK - 2C	30.2	15.5	39	106.2
		3	15NSODVK - 3C3T12	30.2	15.5	39	106.2

4.2 PNEUMATIC VALVE - NORMAL CLOSE

MAJOR SPECIFICATIONS

Max. Working Pressure (G.)	1MPa
Max. Working Temp.	-10 ~ 80℃ (PCTFE) -10 ~ 150℃ (PFA)
Actuator Operating Pressure	0.4~0.6MPa
Cv	0.3
Internal, External Leakage Allowance (He) Test Pressure ≤ 1×10^{-2} Torr Holding Time ≥ 1 min.	1×10^{-10} Pa · m^3/s
Seat Across Leakage Allowance (He) Test Pressure ≤ 1×10^{-2} Torr Holding Time ≥ 15 sec.	1×10^{-10} Pa · m^3/s
Particle Inspection Pressure : 60 ~ 80psi N2 Gas Sample Volume : 1CFM 0.1μm and Larger	No count
Inner Surface Roughness	Ry ≤ 0.7μm 5 μinch Ra(Avg.)

MATERIAL

Body	Diaphragm	Seat	Actuator
316L Stainless Steel VAR	Ni - Co Alloy	PCTFE, PFA	AL

DIMENSIONS

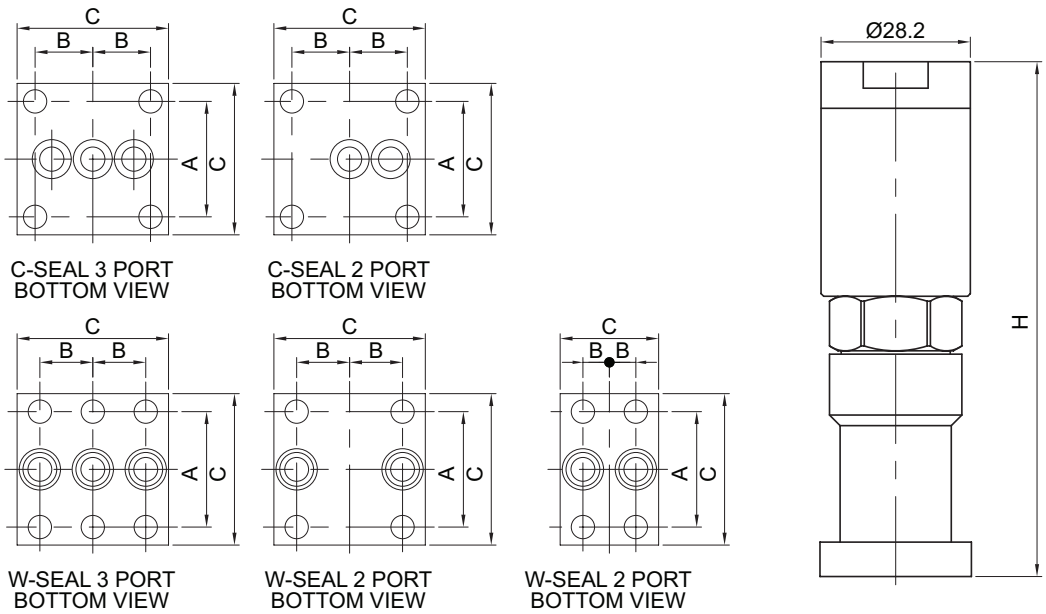

Size	Seal Type	Port	Part Number	A	B	C	H
1.125″	W-Seal	2	11PDV6 - 2W - C	21.8	10	28.5	79.7
		3	11PDV6 - 3W3T12 - C	21.8	10	28.5	79.7
	C-Seal	2	11PDV6 - 2C - C	21.8	10.9	28.5	79.7
		3	11PDV6 - 3C3T12 - C	21.8	10.9	28.5	79.7
1.5″	W-Seal	2	15PDV6 - 2WS - C	30	6.5	26	88.1
		2	15PDV6 - 2W - C	30	13	39	98
		3	15PDV6 - 3W3T12 - C	30	13	39	102
	C-Seal	2	15PDV6 - 2C - C	30.2	15.5	39	98
		3	15PDV6 - 3C3T12 - C	30.2	15.5	39	102

4.3 PNEUMATIC BLOCK VALVE - NORMAL CLOSE

MAJOR SPECIFICATIONS

Max. Working Pressure (G.)	1MPa
Max. Working Temp.	-10 ~ 80℃ (PCTFE) -10 ~ 150℃ (PFA)
Actuator Operating Pressure	0.4 ~ 0.6MPa
Internal, External Leakage Allowance (He) Test Pressure ≤ 1×10^{-2} Torr Holding Time ≥ 1 min.	$1x10^{-10}$ Pa · m^3/s
Seat Across Leakage Allowance (He) Test Pressure ≤ 1×10^{-2} Torr Holding Time ≥ 15 sec.	$1x10^{-10}$ Pa · m^3/s
Particle Inspection Pressure : 60 ~ 80psi N2 Gas Sample Volume : 1CFM 0.1μm and Larger	No count
Inner Surface Roughness	Ry ≤ 0.7μm 5 μinch Ra(Avg.)

MATERIAL

Body	Diaphragm	Seat	Actuator
316L Stainless Steel VAR	Ni - Co Alloy	PCTFE, PFA	AL

DIMENSIONS

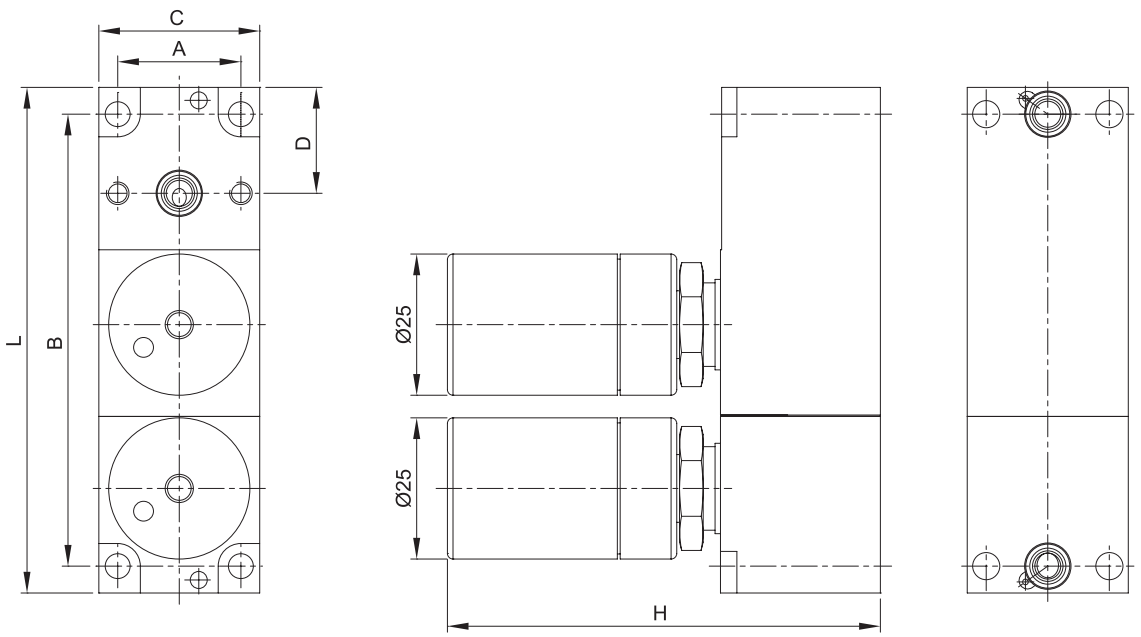

Size	Seal Type	Flow	Part Number	A	B	C	D	L	H
1.125″	W-Seal	1T23	11PBDV6 - 3W1T23 - C	21.8	80	28.5	18.75	89.5	76.6
		3T12	11PBDV6 - 3W3T12 - C	21.8	80	28.5	18.75	89.5	76.6
1.5″		1T23	15PBDV6 - 3W1T23 - C	30	78.5	39	22.5	91.5	100.5
		3T12	15PBDV6 - 3W3T12 - C	30	78.5	39	22.5	91.5	100.5

4.4 METERING VALVE

MAJOR SPECIFICATIONS

Max. Working Pressure (G.)	1MPa
Max. Working Temp.	-10 ~ 150℃
Cv	0.065
Internal, External Leakage Allowance (He) Test Pressure ≤ 1×10⁻² Torr Holding Time ≥ 1 min.	$1x10^{-10}$ Pa · m^3/s
Particle Inspection Pressure : 60 ~ 80psi N2 Gas Sample Volume : 1CFM 0.1μm and Larger	No count
Inner Surface Roughness	Ry ≤ 0.7μm 5 μinch Ra(Avg.)

MATERIAL

Body	Diaphragm	Handle
316L Stainless Steel VAR	Ni - Co Alloy	AL

DIMENSIONS

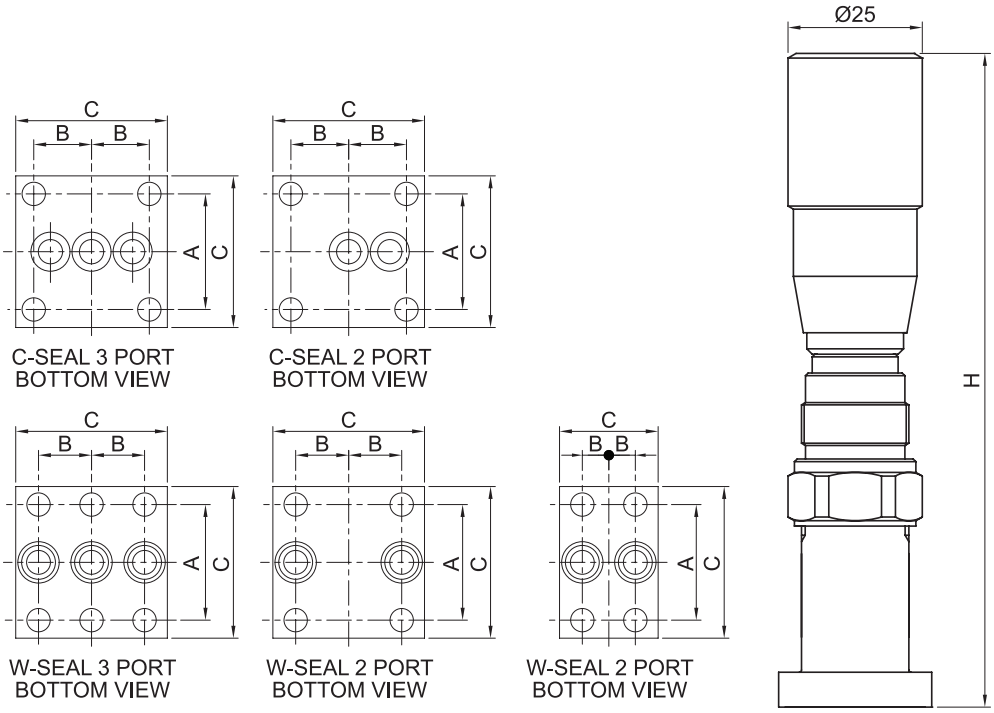

Size	Seal Type	Port	Part Number	A	B	C	H
1.125″	W-Seal	2	11MDMV - 2W - 02	21.8	10	28.5	128
		3	11MDMV - 3W3T12 - 02	21.8	10	28.5	128
	C-Seal	2	11MDMV - 2C - 02	21.8	10.9	28.5	128
		3	11MDMV - 3C3T12 - 02	21.8	10.9	28.5	128
1.5″	W-Seal	2	15MDMV - 2WS - 02	30	6.5	26	122.5
		2	15MDMV - 2W - 02	30	13	39	122.5
		3	15MDMV - 3W3T12 - 02	30	13	39	122.5
	C-Seal	2	15MDMV - 2C - 02	30.2	15.5	39	122.5
		3	15MDMV - 3C3T12 - 02	30.2	15.5	39	122.5

4.5 CHECK VALVE

MAJOR SPECIFICATIONS

Max. Working Pressure (G.)	1MPa
Max. Working Temp.	-10 ~ 80℃
Cv	0.2
Cracking Pressure	2.26kPa
Reseal Pressure	0.02MPa(Process), 0.0294MPa(Purge)
Internal, External Leakage Allowance (He) Test Pressure ≤ 1×10^{-2} Torr Holding Time ≥ 1 min.	$1x10^{-10}$ Pa · m^3/s
Particle Inspection Pressure : 60 ~ 80psi N2 Gas Sample Volume : 1CFM 0.1μm and Larger	No count
Inner Surface Roughness	Ry ≤ 0.7μm 5 μinch Ra(Avg.)

MATERIAL

Process

Body	Gasket	Diaphragm
316L Stainless Steel VAR	SUS316L	FKM, NEOPRENE, KALEZ

Purge

Body	Disk	Spring	Seat	GASKET
316L Stainless Steel VAR	SUS316L	SUS316WPA	FKM, NEOPRENE, KALEZ	SUS316

DIMENSIONS

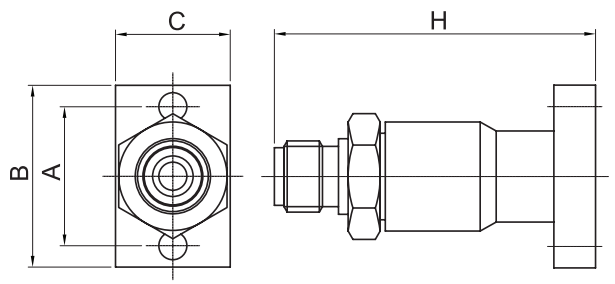

Purge

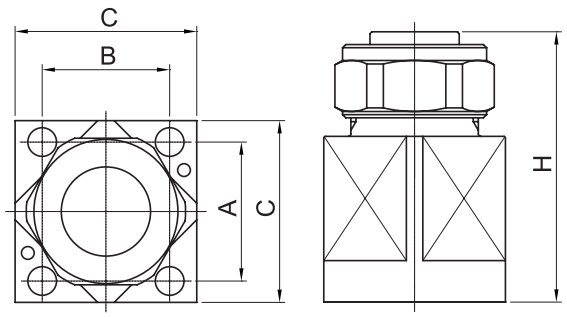

Process

Purge

Size	Seal Type	Flow	Part Number	A	B	C	H
1.125″	W-Seal	VM to W-seal	11CHV3 - VM1W - 0.023	21.8	28.5	18	50.1
		W-seal to VM	11CHV3 - 1WVM - 0.023	21.8	28.5	18	50.1
1.5″		VM to W-seal	15CHV3 - VM1W - 0.023	30	39	18	42
		W-seal to VM	15CHV3 - 1WVM - 0.023	30	39	18	42

Process

Size	Seal Type	Part Number	A	B	C	H
1.125″	W-Seal	11CHV4-2W-0.023	21.8	20	28.5	42.4

4.6 PRESSURE REGULATOR

MAJOR SPECIFICATIONS

Maximum. inlet pressure	150 psig
Outlet pressure	3-30, 3-60, 3-100 psig
Design proof pressure	150% of Maximum rated pressure
Cv	0.08
Max. Working Temp.	-40 ~ 71℃
Internal, External Leakage Allowance (He) **Test Pressure ≤ 1×10^{-2} Torr** **Holding Time ≥ 1 min.**	$1x10^{-9}$ atm · cc/sec
Particle Inspection **Pressure : 60 ~ 80psi N2 Gas Sample Volume : 1CFM** **0.1μm and Larger**	No count
Inner Surface Roughness	Ry ≤ 0.7μm 5 μinch Ra(Avg.)

MATERIAL

Body	Diaphragm	Seat
316L Stainless Steel VAR	Hastelloy C-22	PCTFE
316L Stainless Steel VAR with Hastelloy inte rnals		
Hastelloy		

DIMENSIONS

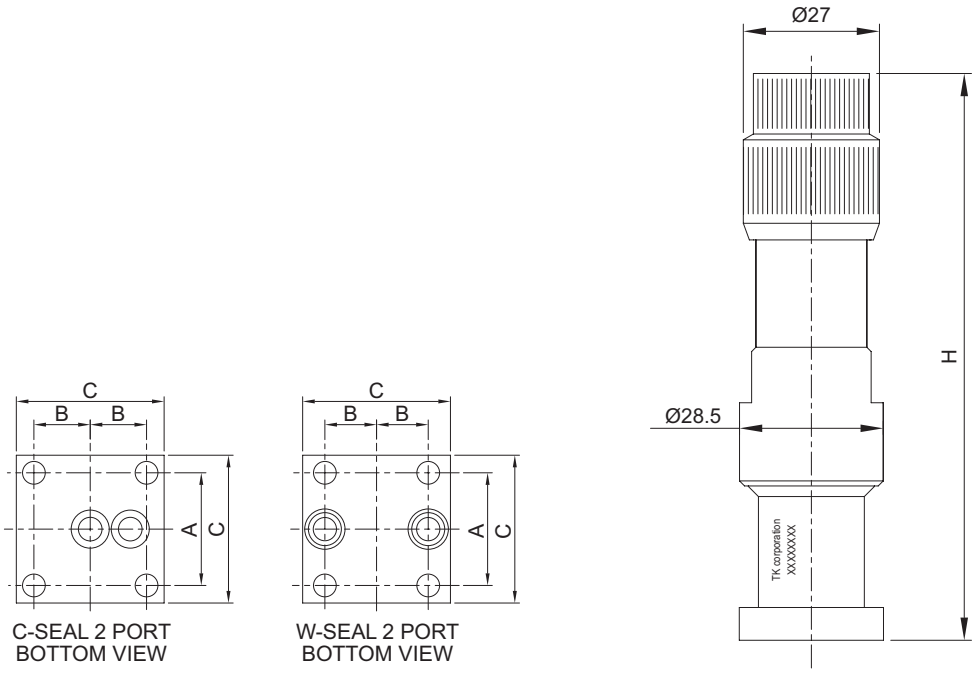

Size	CONNECTION TYPE	A	B	C	H
1.125″	W-Seal	21.8	10	28.6	117.5
	C-Seal	21.8	10.9	28.6	117.5
1.5″	W-Seal	30	13	39	118.5
	C-Seal	30.2	15.5	39	118.5

ORDERING INFORMATION

D	11	MRG4	–	2W	–	1A1	–	PX
Material	Size	Product		Connection Type		Outlet pressure Range		Grade

MATERIAL		SIZE		PRODUCT
D	316L Stainless steel VAR	11	1.125″	MGR4 Series
DH	316L Stainless Steel VAR with Hastelloy internals	15	1.5″	
H	Hastelloy			

CONNECTION TYPE	OUTLET PRESSURE RANGE	GRADE
2W = W - Seal (2Port)	1A0 = 3 - 30PSIG	PX = Precision Electropolishing
2C = C - Seal (2Port)	1A1 = 3 - 60PSIG	
	1A2 = 3 - 100PSIG	

FLOW CURVES

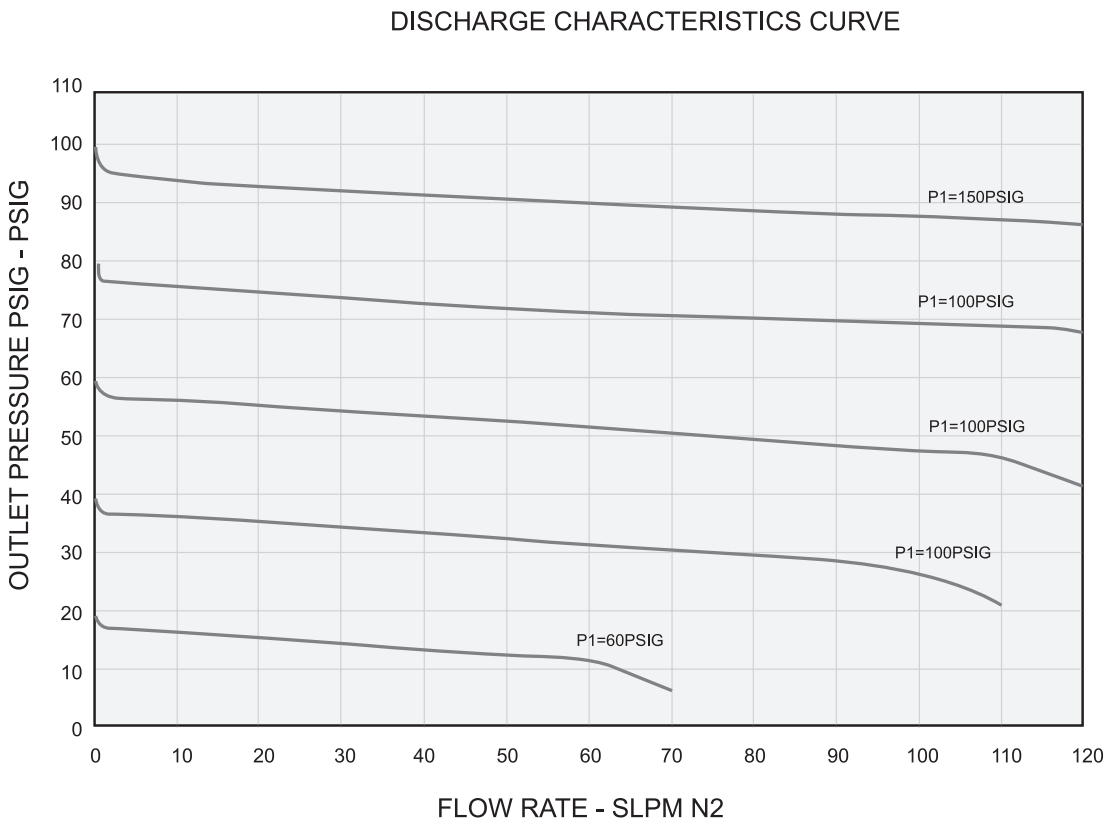

4.7 METAL FILTER

MAJOR SPECIFICATIONS

Max. inlet pressure	0.98MPa (10kgf/m²) at 20℃
Max.differential pressure	0.7MPa (7kgf/m²) at 20℃
Max. Working Temp.	460℃
Removal rating	≥0.0025μm
Retention	Greater than 99.9999999% Removal of all particles down to 0.0025μm
Rated Flow @10^9	30, 60, 120 slpm
Helium leak rating	$1x10^{-10}$ Pa·m³/s
Inner Surface Roughness	Ry ≤ 0.7μm 5 μinch Ra(Avg.)

MATERIAL

Stainless steel Filter		Hastelloy Filter	
Electropolished Housing	Element	Electropolished Housing	Element
316L Stainless Steel / 316L Stainless Steel VAR	316L Stainless steel	Hastelloy C-22	Hastelloy C-276

DIMENSIONS

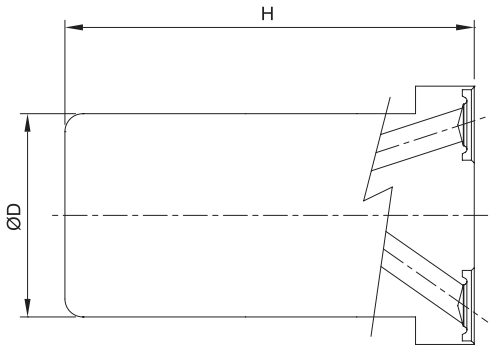

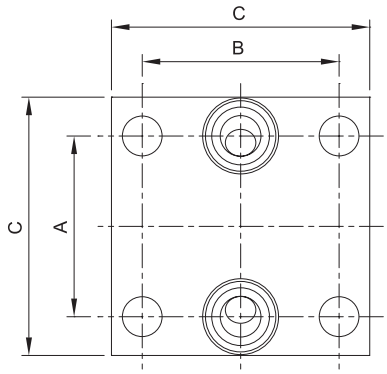

Size	SEAL TYPE	PART NUMBER	A	B	C	D	H
1.125″	W-Seal	DS11FT - 2W - 30	20	21.8	28.6	21.5	45.5
		DS11FT - 2W - 60	20	21.8	28.6	21.5	58.5
		DS11FT - 2W - 120	20	21.8	28.6	22.5	92
	C-Seal	DS11FT - 2C - 30	21.8	21.8	28.6	21.5	45.5
		DS11FT - 2C - 60	21.8	21.8	28.6	21.5	58.5
1.5″	W-Seal	DS15FT - 2W - 60	26	30	39	27.5	62
		DS15FT - 2W - 120	26	30	39	27.5	96
	C-Seal	DS15FT - 2C - 60	31	30.2	39	27.5	62
		DS15FT - 2C - 120	31	30.2	39	27.5	96

PERFORMANCE DATA

[DS11FT-2W-30]

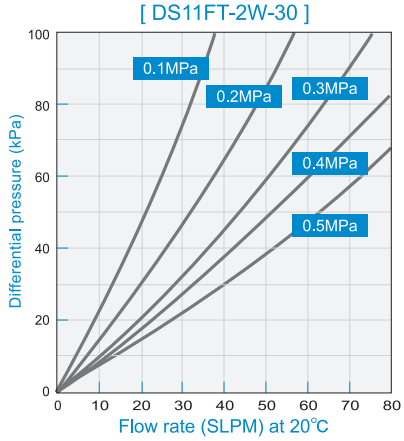

[DS11FT-(15FT)-2W-60]

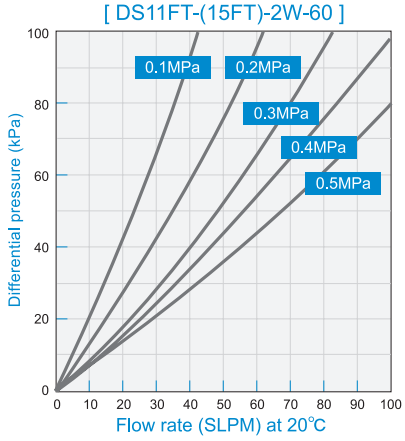

[DS15FT(159FT)-2W-120]

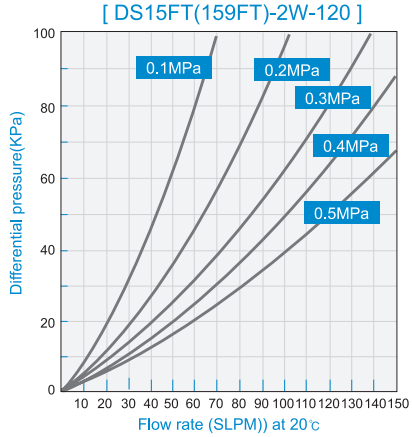

4.8 BASE BLOCK

Materials	316L Stainless Steel VAR
Surface finish interior	≤ Ra 5µin

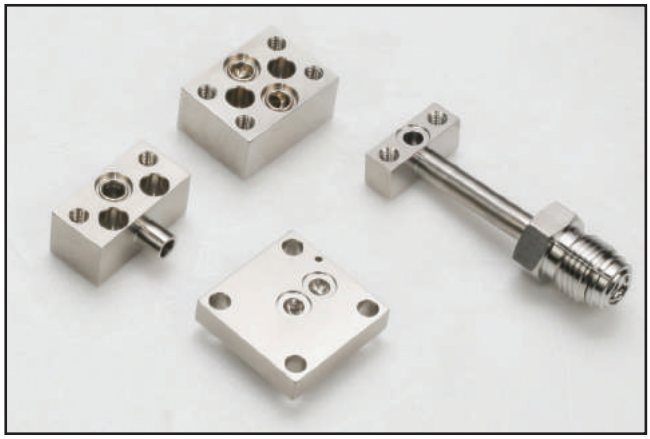

[C-SEAL]

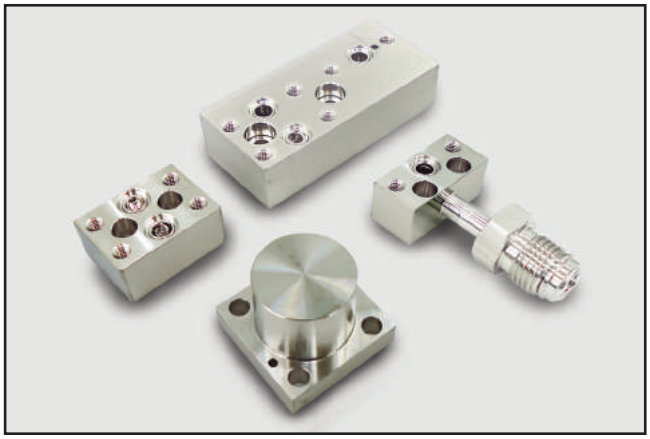

[W-SEAL]

4.9 GASKET

Material - 316L Stainless Steel VAR

W - SEAL

SIZE	PART NUMBER
1.125″	UGC-6.35GR
1.5″	UGF-6.35GR

[1.125”] [1.5”]

C - SEAL

	SIZE	3PORT	2PORT	1PORT (MFC)
		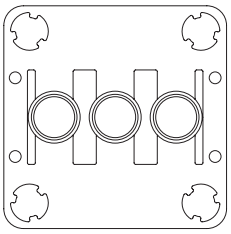	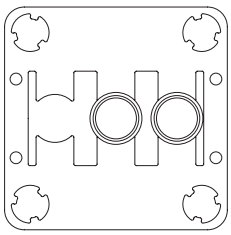	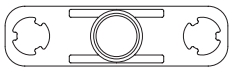
PART NUMBER	1.125″	CS11 - 3P	CS11 - 2P	CS11 - 1PMF
	1.5″	CS15 - 3P	CS15 - 2P	CS15 - 1PMF

4.10 HEX SOCKET CAP SCREW

MATERIAL - SUS XM7(SILVER PLATED)

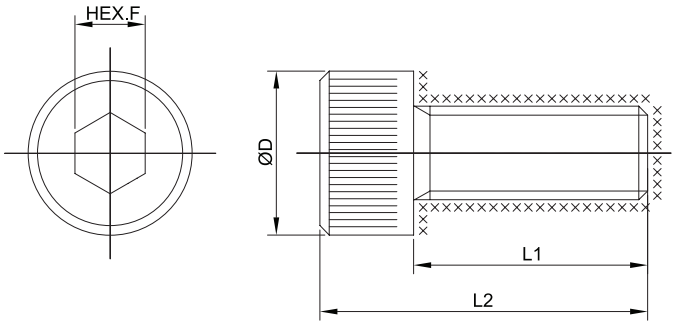

XXX : Silver plated

Part Name	M4X0.7			
	F	D	L1	L2
M4X10	3	7	10	14
M4X29			29	33
M4X33			33	37

Part Name	M5X0.8			
	F	D	L1	L2
M5X12	4	8.5	12	17
M5X15			15	20
M5X18			18	23
M5X30			30	35
M5X33			33	38
M5X35			35	40
M5X40			40	45
M5X43			43	48

5. 11DVNL1 SERIES (MANUAL DIAPHRAGM VALVE)

MAJOR SPECIFICATIONS

Max. Working Pressure (G.)	1MPa
Max. Working Temp.	-10 ~ 80℃ (PCTFE) -10 ~ 150℃ (PFA)
Cv	0.3
Internal, External Leakage Allowance (He) Test Pressure ≤ 1×10^{-2} Torr Holding Time ≥ 1 min.	$1x10^{-10}$ Pa · m^3/s
Seat Across Leakage Allowance (He) Test Pressure ≤ 1×10^{-2} Torr Holding Time ≥ 30 sec.	$1x10^{-10}$ Pa · m^3/s
Particle Inspection Pressure : 60 ~ 80psi N2 Gas Sample Volume : 1CFM 0.1μm and Larger	No count
Inner Surface Roughness	Ry ≤ 0.7μm 5 μinch Ra(Avg.)

MATERIAL

Body	Diaphragm	Seat	Handle
316L Stainless Steel VAR	Ni - Co Alloy	PCTFE, PFA	NYLON6

DIMENSIONS

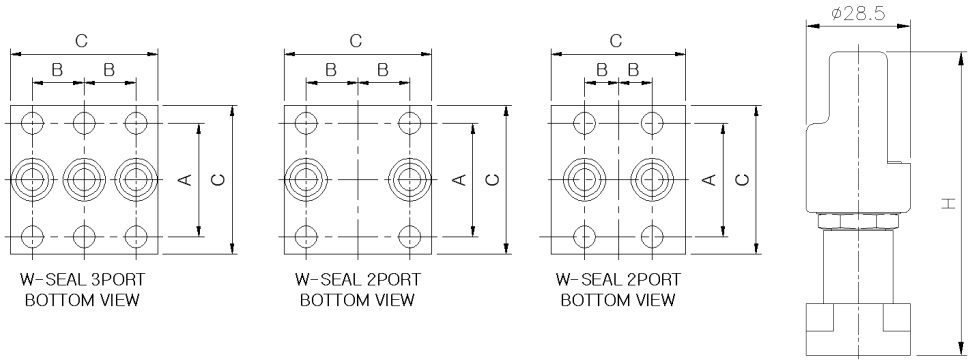

Size	Seal Type	Port	Part Number	A	B	C	H
1.125"	W-Seal	2	11DVNL1-2W	21.8	10	28.5	82.8
		3	11DVNL1-3W3T12	21.8	10	28.5	82.8
1.5"	W-Seal	2	15DVNL1-2WS	30	6.5	26	88.8
		2	15DVNL1-2W	30	13	39	88.8
		3	15DVNL1-3W3T12	30	13	39	88.8

6. 11PBDV1 SERIES (PNEUMATIC BLOCK DIAPHRAGM VALVE(N.C. TYPE))

MAJOR SPECIFICATIONS

Max. Working Pressure (G.)	1MPa
Max. Working Temp.	-10 ~ 80℃ (PCTFE) -10 ~ 150℃ (PFA)
Actuator Operating Pressure	0.4 ~ 0.6MPa
Internal, External Leakage Allowance (He) Test Pressure ≤ 1×10^{-2} Torr Holding Time ≥ 1 min.	$1x10^{-10}$ Pa · m^3/s
Seat Across Leakage Allowance (He) Test Pressure ≤ 1×10^{-2} Torr Holding Time ≥ 15 sec.	$1x10^{-10}$ Pa · m^3/s
Particle Inspection Pressure : 60 ~ 80psi N2 Gas Sample Volume : 1CFM 0.1μm and Larger	No count
Inner Surface Roughness	Ry ≤ 0.7μm 5 μinch Ra(Avg.)

MATERIAL

Body	Diaphragm	Seat	Actuator
316L Stainless Steel VAR	Ni - Co Alloy	PCTFE, PFA	AL

DIMENSIONS

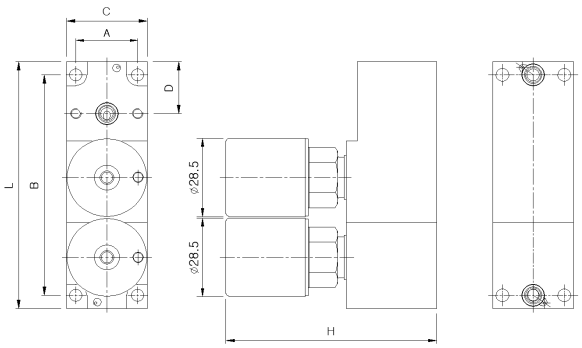

Size	Seal Type	Port	Part Number	A	B	C	D	L	H
1.125"	W-Seal	1T23	11PBDV1-3W1T23-C	21.8	80	28.5	18.75	89.5	74.5
		3T12	11PBDV1-3W3T12-C	21.8	80	28.5	18.75	89.5	74.5

7. 11PDV1 SERIES (PNEUMATIC DIAPHRAGM VALVE(N.C. TYPE))

MAJOR SPECIFICATIONS

Max. Working Pressure (G.)	1MPa
Max. Working Temp.	-10 ~ 80℃ (PCTFE) -10 ~ 150℃ (PFA)
Actuator Operating Pressure	0.4~0.6MPa
Cv	0.3
Internal, External Leakage Allowance (He) Test Pressure ≤ 1×10^{-2} Torr Holding Time ≥ 1 min.	1×10^{-10} Pa · m^3/s
Seat Across Leakage Allowance (He) Test Pressure ≤ 1×10^{-2} Torr Holding Time ≥ 15 sec.	1×10^{-10} Pa · m^3/s
Particle Inspection Pressure : 60 ~ 80psi N2 Gas Sample Volume : 1CFM 0.1μm and Larger	No count
Inner Surface Roughness	Ry ≤ 0.7μm 5 μinch Ra(Avg.)

MATERIAL

Body	Diaphragm	Seat	Actuator
316L Stainless Steel VAR	Ni - Co Alloy	PCTFE, PFA	AL

DIMENSIONS

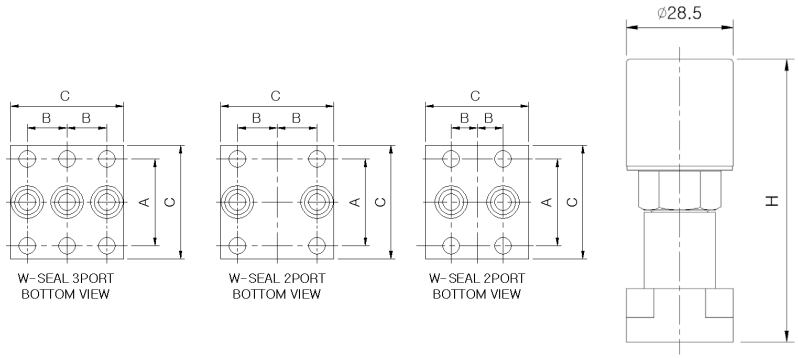

Size	Seal Type	Port	Part Number	A	B	C	H
1.125"	W-Seal	2	11PDV1-2W-C	21.8	10	28.5	74
		3	11PDV1-3W3T12-C	21.8	10	28.5	74
1.5"	W-Seal	2	15PDV1-2WS-C	30	6.5	26	82
		2	15PDV1-2W-C	30	13	39	82
		3	15PDV1-3W3T12-C	30	13	39	82

5. IGS EXAMPLE

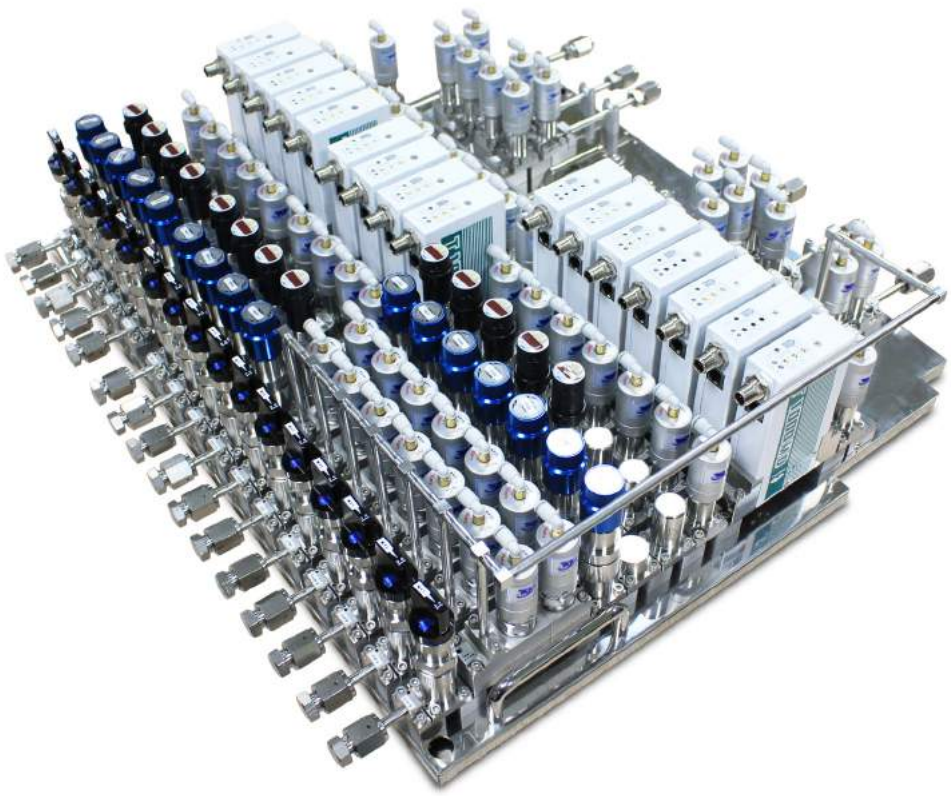

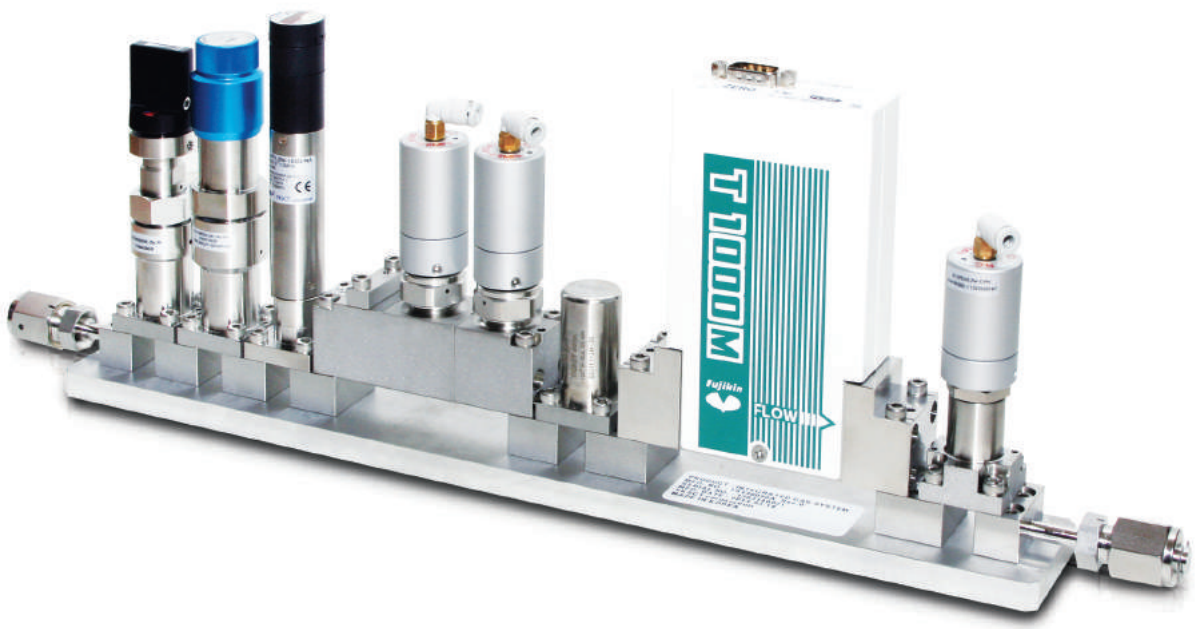

MFC(Mass Flow Controller)FUJIKIN

FCS Thermal Series

TK-FUJIKIN CORPORATION

Fujikin Carp Group

ORDERING INFORMATION

FCST1000MZDC-4J2-F20L-AR-R1-CR-U***

FLOW CONTROL SYSTEM

① ② ③ ④ ⑤ ⑥ ⑦ ⑧ ⑨ ⑩ ⑪ ⑫ ⑬

① Sensor Type
T:Mass Flow Controller
TM:Mass Flow Meter

③ Seal material
None : Elastomer
M : Metal

⑥ Valve operating mode
C:Normally closed
Blank : Normally open

⑧ Full scale
F20 : 20SCCM
F20L : 20SLM

⑨ Gas type
Example : AR, HE, SIH4
(A capital letter indicates a gas name.)

② Series

Single Gas
1005 → 10, 20, 30, 50,
100, 200, 300, 500 SCCM
1, 2, 3, 5 SLM
1030 → 6, 10, 20, 30 SLM
1050 → 31, 40, 50 SLM
1200 → 100, 150, 200 SLM
1500 → 250, 300, 400, 500 SLM
Multi Gas
1005 → 30, 100、300 SCCM
1, 3 SLM
1030 → 10, 30 SLM
1050 → 50 SLM
10**MF(C)-HT→高□用

④ MGMR
Blank : Single Gas
Single Range
Z : Multi Gases
Multi Ranges

⑤ Communication Interface
L : Analog
F : Analog/Digital
D : DeviceNet™

⑦ End connection/Face To Face dimension
4J2 : 1/4" UJR 124mm
4F2 : 1/4" F900 127mm
4CW1 : 1.125W 79.8mm
4CW2 : 1.125W 92mm
4CL2 : 1.125C seal, 92mm
4WS1 : 1.5W 79.8mm
4WS2 : 1.5W 92mm
6J3 : 3/8" UJR 192.4mm
6F3 : 3/8" F900 192.5mm
8J3 : 1/2" UJR 199mm
8F3 : 1/2" F900 204.6mm

⑩ Bin Numbers

R1 (Bin 1)	:	10SCCM ~	30SCCM
R2 (Bin 2)	:	31SCCM ~	100SCCM
R3 (Bin 3)	:	101SCCM ~	300SCCM
R4 (Bin 4)	:	301SCCM ~	1000SCCM
R5 (Bin 5)	:	1001SCCM ~	3000SCCM
R6 (Bin 6)	:	3001SCCM ~	10000SCCM
R7 (Bin 7)	:	10001SCCM ~	30000SCCM
R8 (Bin 8)	:	30001SCCM ~	50000SCCM

⑪ O-Ring Material
Blank : FKM
CR : Chloroprene Rubber

⑫ D-sub 9pin connector screw
Blank : M3
U:inch

⑬ user specification
Example : 006
25℃ 1atm
Flow Rate Unit : CCM,LM

DIMENSIONS

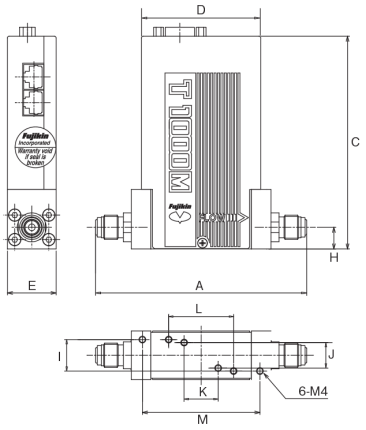

UJR/F900/High Flow Type

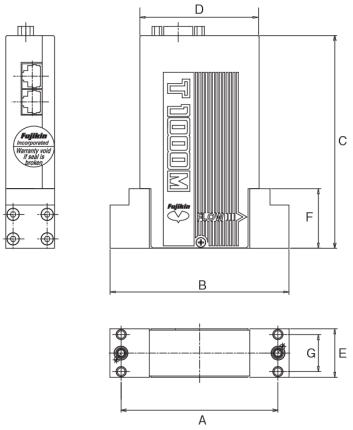

IGS Type

UJR/F900 TYPE

	A (UJR)	A (F900)	C	D	E	H	I	J	K	L	M
T1000/T1000L	124	127	125	77	32	12.7	18.5	-	-	-	69
T1000M/T1000M-HT	124	127	125	70	28.6	12.7	18.5	15	20	38.1	69

IGS TYPE

	A	B	C	D	E (1.5W)	E (1.125w)	F	G (1.5w)	G (1.125w)
T1000/T1000L	92	105	127	77	39	-	37	30	-
T1000M/T1000M-HT	92/79.8	105/93	125	70	39	28.6	25.4	30	21.8

HIGH FLOW TYPE

	A (UJR)	A (F900)	C	E	H	I	M
T1200	192.4	192.5	127	50	15	25.9	90
TM1200	147.9	-	130	50	15	35.9	35.9
T1500	199	204.6	140.3	50	24	25.5	90
TM1500	146	-	140	50	24	35.9	35.9

FCS SERIES LEAD THE FLOW CONTROL TECHNOLOGY

OPERATING PRINCIPLES

When gas flows through a Mass Flow Controller, temperature changes are detected at the thermal sensor. This temperature gradient is used to compute the mass flow rate. Each gas has specific ability to transfer heat (called heat capacity) dictated by the physical structure of the gas molecules. A Mass Flow Controller proportionally controls the flow rate to a given flow set point.

INTERNAL STRUCTURE

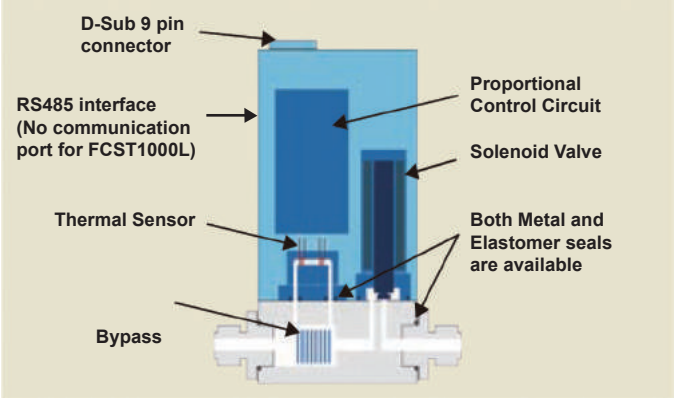

MULTI GAS / MULTI RANGE (FCST1000Z)

REDUCE INVENTORY AND CUT DOWN LEAD TIME

Multi-Gas/ Multi-Range (MG-MR) MFCs enable better inventory management by reducing inventory. MFCs can be programmed to different flow rates and gases within specific bin sizes.

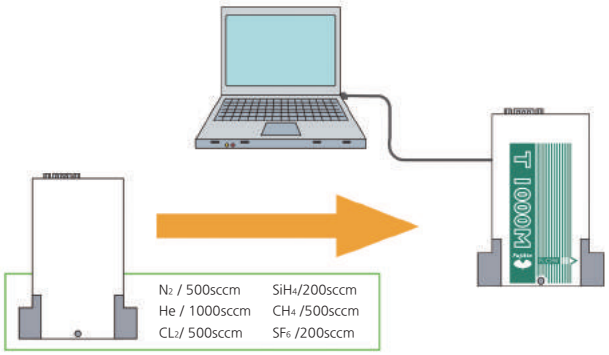

Easy to change gas and flow rate by users!

IMPROVED FLOW ACCURACY

*Incorporated highly accurate bypass element
*Improved gas flow accuracy by optimizing gas data for each bin

SUPERIOR RESPONSE (FCST1000F/FCST1000Z)

PROGRESSIVE PID TECHNOLOGY : RESPONSE TIME IS 1 SECOND FOR ANY GIVEN SET POINT

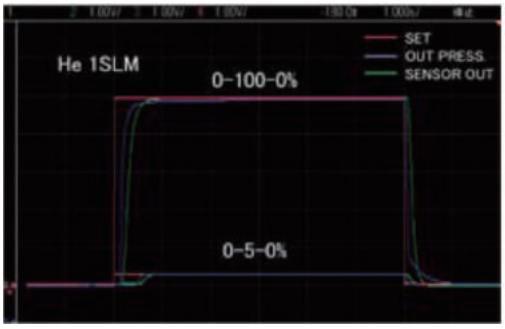

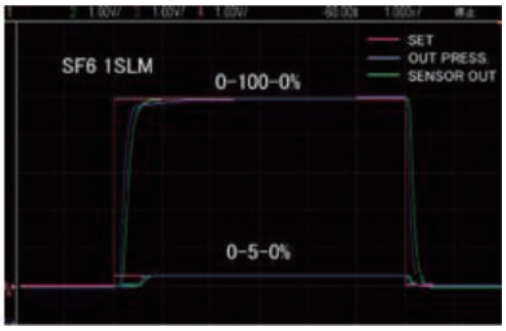

DIGITAL COMMUNICATION INTERFACE (FCST1000FD/FCST1000ZD)

Many semiconductor tools use programmable logic controllers.
Recently many digital communication devices have been developed to reduce cables and cost. FCS series MFCs are available in DeviceNetTM and RS485 communication interface, which enables elimination of Analog/Digital convertors and direct connection to a PLC.
Each MFC can be connected in parallel, which reduces cables and possible manufacturing cost reduction.
EtherCAT digital communication interface will be available in the future

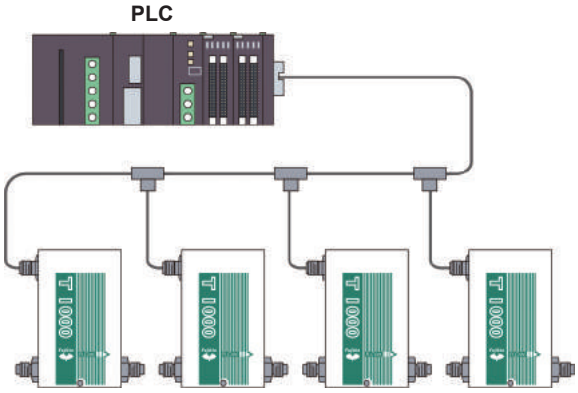

DIGITAL COMMUNICATION INTERFACE (FCST1000FD/FCST1000ZD)

All digital MFCs (including DeviceNet™) have a RS485 digital communication function, which enable the user to monitor the flow performance using a Graphic User Interface and aid in trouble-shooting.

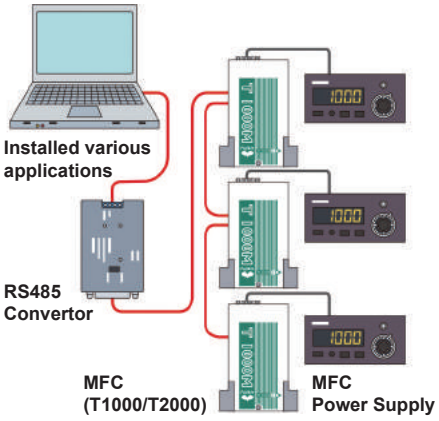

■ APPLICATION SOFTWARE

1 channel Monitoring Software for Digital communication
(Graphic Monitor, Flow Control, Alarm, etc.)
1 channel Monitoring Software for DeviceNetTM communication
(Graphic Monitor, Full Scale, Hexadecimal Monitoring, Assembly)
9 channels Monitoring Software for Digital communication
(Graphic Monitor, Step Sequence Control, Alarm etc.)
Multi Gas/Multi Range Configuration Software for FCST1000Z series
(Enable changing gas and full scale flow range)
MAC ID Setting Software
(Enable changing MAC ID setting)
DeviceNetTM Configuration Software
(Enable changing Hexadecimal Full Scale, Input, Output, etc.)

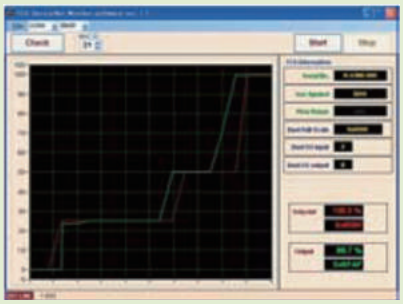

FCST1000(M)Z

SPECIFICATIONS

Model Number	FCST1005(M)ZF/TM1005(M)ZF FCST1005(M)ZD(DeviceNer™)/TM1005(M)ZD	FCST1030(M)ZF/TM1030(M)ZF FCST1030(M)ZD(DeviceNer™)/TM1030(M)ZD	FCST1050(M)ZF/TM1050(M)ZF FCST1050(M)ZD(DeviceNer™)/TM1050(M)ZD
Flow Range (N_2 Equivalent)	Bin 1 : 10SCCM ~ 30SCCM Bin 2 : 31SCCM ~ 100SCCM Bin 3 : 101SCCM ~ 300SCCM Bin 4 : 301SCCM ~ 1000SCCM Bin 5 : 1001SCCM ~ 3000SCCM	Bin 6 : 3001SCCM ~ 10000SCCM Bin 7 : 10001SCCM ~ 30000SCCM	Bin 8 : 30001SCCM ~ 50000SCCM
Valve Type	N/O: Normally Open, N/C: Normally Closed		
Controlled Volume Range	2% ~ 100%F.S.		
Flow Accuracy	100% ~ 25% : ±1.0% of S.P., 25% ~ 2% : ±0.25%F.S. (Accuracy guaranteed between 15 ~ 35ºC)		
Setting Signal	0 ~ 5VDC		
Output Signal	0 ~ 5VDC		
Repeatability	±0.2%F.S.		
Response Time	≦1sec		
Required Pressure Difference	50 ~ 300kPa (Ar : 100~300kPa)	NO 50 ~ 300kPa (3SLM~10SLM) NO 150 ~ 300kPa (11SLM~30SLM) NO 50 ~ 300kPa (3SLM~10SLM) NO 100 ~ 300kPa (11SLM~30SLM) (Ar150 ~ 400kPa)	200 ~ 300kPa (Ar : 250~450kPa)
MAX Operating Pressure	400kPaG (Ar : 500kPaG)		
Proof Pressure	1MPaG		
Guaranteed Operating Temperature Range	5 ~ 50°C		
External Leak Rate	Metal Seal : $1X10^{-11}$ Pa·m³ / sec He, Elastomer Seal : $1X10^{-7}$ Pa·m³ / sec He		
Mounting Orientation	Can be mounted in any orienation		
Current Consumption	T1000ZF + 15VDC : 50mA, -15VDC : 200mA		
	T1000ZD + 11 ~ + 24VDC, 5.5VA (5.5W)		
Communication	Analog 0 ~ 5V D.C, Digital : RS485 (Fujikin Protocol), DeviceNer™		
Wetted Surface Material	316L SS, Magnetic Stainless Steel, Hastelloy (Seneor), PTFE		
Seal Material	Metal Seal : SUS316L, Elastomer Seal : Fluoro-Rubber (Chloroprene Rubber)		
Actuator Type	Solenoid actuator		
Surface Finish	None (Option : EP)		
Fittings	1/4" UJR, 1/4" F900, 1.125 Wseal®, 1/4" 1.125 Cseal		
Digital Communication	RS-485, Standard tranmission rate 38400bps, Maximum Connected units 127		

※This specification is for MFC.
*1 At Fujikin flow rates (SCCM, SLM) are converted to values at 0°C, 101.3kPa abs (1 atm) for calibeation.
*2 Reference temperature for temperature coefficient is 25°C.
*3 Response time on SPEC sheet is the time to reach from minimum flow rate to ±2%F.S of setting flow rate.

FCST1000(M)F

SPECIFICATIONS

Model Number	FCST1005(M)F/TM1005(M)F FCST1005(M)FD(DeviceNer™)/TM1005(M)FD	FCST1030(M)F/TM1030(M)F FCST1030(M)FD(DeviceNer™)/TM1030(M)FD	FCST1050(M)F/TM1050(M)F FCST1050(M)FD(DeviceNer™)/TM1050(M)FD
Flow Range (N_2 Equivalent)	10, 20, 30, 50, 100, 200, 300, 500SCCM 1, 2, 3, 5SLM	10, 20, 30SLM	40, 50SLM
Valve Type	N/O: Normally Open, N/C: Normally Closed		
Controlled Volume Range	2% ~ 100%F.S.		
Flow Accuracy	±1% F.S. (Accuracy guaranteed between 15~35ºC)		
Setting Signal	0 ~ 5VDC		
Output Signal	0 ~ 5VDC		
Repeatability	±0.2%F.S.		
Response Time	≦1sec		
Required Pressure Difference	50 ~ 300kPa	NO 50 ~ 300kPa (6SLM~10SLM) NO 100 ~ 300kPa (11SLM~20SLM) NO 150 ~ 300kPa (21SLM~30SLM) NO 50 ~ 300kPa (6SLM~10SLM) NO 100 ~ 300kPa (11SLM~30SLM)	200 ~ 300kPa
MAX Operating Pressure	400kPaG		
Proof Pressure	1MPaG		
Guaranteed Operating Temperature Range	5 ~ 50°C		
External Leak Rate	Metal Seal : $1X10^{-11}$ Pa·m³ / sec He, Elastomer Seal : $1X10^{-7}$ Pa·m³ / sec He		
Mounting Orientation	Can be mounted in any orientation		
Current Consumption	T1000F +15VDC : 50mA, -15VDC, 200mA		
	T1000FD +11 ~ +24VDC, 5.5VA (5.5W)		
Communication	Analog 0 ~ 5V DC, Digital: RS485 (Fujikin Protocol), DeviceNetTM		
Wetted Surface Material	316L SS, Magnetic Stainless Steel, PTFE		
Seal Material	Metal Seal: SUS316L, Elastomer Seal: Fluoro-Rubber (Chloroprene Rubber)		
Actuator Type	Solenoid actuator		
Surface Finish	None (Option: EP)		
Fittings	1/4" UJR, 1/4" F900, 1/4" 1.5 Wseal®, 1/4" 1.125 Wseal®, 1/4" 1.125 Cseal		
Digital Communication	RS-485, Standard transmission rate 38400bps, Maximum connected units 127		

※This specification is for MFC.
*1 At Fujikin flow rates (SCCM, SLM) are converted to values at 0°C, 101.3kPa abs (1 atm) for calibeation.
*2 Reference temperature for temperature coefficient is 25°C.
*3 Response time on SPEC sheet is the time to reach from minimum flow rate to ±2%F.S of setting flow rate.

FCST1000(M)L

SPECIFICATIONS

Model Number	FCST1005(M)L/TM1005(M)L	FCST1030(M)L/TM1030(M)L	FCST1050(M)L/TM1050(M)L
Flow Range (N_2 Equivalent)	10, 20, 30, 50, 100, 200, 300, 500SCCM 1, 2, 3, 5SLM	10, 20, 30SLM	40, 50SLM
Valve Type	N/O: Normally Open (Released on June, 2012), N/C: Normally Closed		
Controlled Volume Range	2% ~ 100%F.S.		
Flow Accuracy	±1% F.S. (Accuracy guaranteed between 15~35ºC)		±2%F.S.(Accuracy guaranteed between15~35ºC)
Setting Signal	0.1 ~ 5VDC		
Output Signal	0 ~ 5VDC		
Repeatability	±0.2%F.S.		
Response Time	≦1sec		≦2sec
Required Pressure Difference	50 ~ 300kPa	50 ~ 300kPa (6SLM~10SLM) 100 ~ 300kPa (10SLM~30SLM)	200 ~ 300kPa
MAX Operating Pressure	400kPa		
Proof Pressure	1MPaG		
Guaranteed Operating Temperature Range	5 ~ 50°C		
External Leak Rate	Metal Seal : $1X10^{-11}$ Pa·m³ / sec He, Elastomer Seal : $1X10^{-7}$ Pa·m³ / sec He		
Mounting Orientation	Can be mounted in any orienation		
Current Consumption	+15VDC : 25mA, -15VDC : 180mA		
Wetted Surface Material	316L SS, Magnetic Stainless Steel, PTFE		
Seal Material	Metal Seal: SUS316L, Elastomer Seal: Fluoro-Rubber (Chloroprene Rubber)		
Actuator Type	Solenoid actuator		
Surface Finish	Machined Finish		
Fittings	1/4" UJR,1/4" F900,1/4" 1.5 Wseal®, 1.125 Cseal		

※This specification is for MFC.
*1 At Fujikin, flow rates (SCCM, SLM) are converted to values at 0ºC, 101.3kPa abs (1atm) for calibration.
*2 Reference temperature for temperature coefficient is 25ºC.
*3 Response time on SPEC sheet is the time to reach from minimum flow rate to ±2%F.S. of setting flow rate.

FCST1200F, 1500F

SPECIFICATIONS

Model Number	FCST1200F/TM1200F FCST1200FD/TM1200FD	FCST1500F/TM1500F FCST1500FD/TM1500FD
Flow Range (N_2 Equivalent)	100, 150, 200SCCM	250, 300, 400, 500SLM
Valve Type	NO : Normally Open NC : Normally Close	NC : Normally Close
Controlled Volume Range	2% ~ 100%F.S.	
Flow Accuracy	±1% F.S. (Accuracy guaranteed between 15~35ºC)	±2% F.S. (Accuracy guaranteed between 15~35ºC)
Setting Signal	0.1 ~ 5VDC	
Output Signal	0 ~ 5VDC	
Linearity	±0.3%F.S.	
Repeatability	±0.5%F.S.	
Response Time	≦3sec	
Required Pressure Difference	100 ~ 300kPa	150 ~ 300kPa
MAX Operating Pressure	700kPaG	
Proof Pressure	1MPaG	
Guaranteed Operating Temperature Range	5 ~ 45°C	
External Leak Rate	≦1×10^{-7}Pa·m^3/sec He	
Mounting Orientation	Can be installed in any attitude	
Current Consumption	T1200F, T1500F +15VDC : 50mA, -15VDC : 350mA	
	T1200FD, T1500FD +11~+24VDC, 8.5VA(8.5W)	
Communication	Analog: 0~5VDC, Digital: RS485 (Fujikin Protocol), DeviceNet™	
Wetted Surface Material	316 SS, PTFE, Fluoro-Rubber (Chloroprene Rubber)	
Seal Material	Fluoro-Rubber or Chloroprene Rubber	
Actuator Type	Solenoid actuator	
Surface Finish	Machined Finish	
Fittings	3/8” UJR, 3/8” F900	1/2” UJR, 1/2” F900
Digital Communication	RS-485, Standard transmission rate 38400bps, Maximum connected units 127	

※This specification is for MFC.
*1 At Fujikin, flow rates (SCCM, SLM) are converted to values at 0ºC, 101.3kPa abs (1atm) for calibration.
*2 Reference temperature for temperature coefficient is 25ºC.
*3 Response time on SPEC sheet is the time to reach from minimum flow rate to ±2%F.S of setting flow rate.

FCST1000MF-HT

SPECIFICATIONS

Model Number	FCST1005MF-HT/TM1005MF-HT FCST1005MFD-HT/TM1005MFD-HT	FCST1030MF-HT/TM1030MF-HT FCST1030MFD-HT/TM1030MFD-HT	FCST1050MF-HT/TM1050MF-HT FCST1050MFD-HT/TM1050MFD-HT
Flow Range (N_2 Equivalent)	10, 20, 30, 50, 100, 200, 300, 500SCCM 1, 2, 3, 5SLM	10, 20, 30SLM	40, 50SLM
Valve Type	N/O: Normally Open, N/C: Normally Closed		
Controlled Volume Range	2% ~ 100%F.S.		
Flow Accuracy	±1% F.S. (Accuracy guaranteed between 50~80ºC)		
Setting Signal	0.1 ~ 5VDC		
Output Signal	0 ~ 5VDC		
Repeatability	±0.2%F.S.		
Response Time	≦1sec		
Required Pressure Difference	50 ~ 300kPa	NO, NC 50~300kPa (6SLM~10SLM) NO 100~300kPa (11SLM~20SLM) 150~300kPa (21SLM~30SLM) NC 100~300kPa (11SLM~30SLM)	200 ~ 300kPa
MAX Operating Pressure	400kPaG		
Proof Pressure	1MPaG		
Guaranteed Operating Temperature Range	50 ~ 80°C		
External Leak Rate	1×10^{-1}Pam^{3}/sec He		
Mounting Orientation	Can be mounted in any orientation		
Current Consumption	T1000F +15VDC : 50mA, -15VDC, 200mA		
	T1000MFD +11~24VDC,5.5VA(5.5W)		
Communication	Analog 0 ~ 5V DC, Digital: RS485 (Fujikin Protocol), DeviceNetTM		
Wetted Surface Material	316L SS, Magnetic Stainless Steel, PTFE		
Seal Material	316L SS		
Actuator Type	Solenoid actuator		
Surface Finish	None (Option: EP)		
Fittings	1/4" UJR, 1/4" F900, 1/4" 1.5 Wseal®, 1/4" 1.125 Wseal®, 1/4" 1.125 Cseal		
Digital Communication	RS-485, Standard transmission rate 38400bps, Maximum connected units 127		

※This specification is for MFC.
*1 At Fujikin, flow rates (SCCM, SLM) are converted to values at 0ºC, 101.3kPa abs (1atm) for calibration.
*2 Reference temperature for temperature coefficient is 25ºC.
*3 Response time on SPEC sheet is the time to reach from minimum flow rate to ±2%F.S of setting flow rate

PT Sensor & Canister

TK-FUJIKIN CORPORATION
Fujikin Carp. Group

ULTRA HIGH PURITY PRESSURE TRANSDUCER

PT1 SERIES

FEATURES

- External diameter 20mm. Easily installable fitting block
- Highly visible display by LED(3 & 1/2 digit)
- Rotation display part(90˚ step, 270˚ full travel)
- Wide combination of output types (switch, current or voltage) available
- Integrally welded structure of sensing chip and fitting block
- Compatible with CE marking

TK-FUJIKIN corporation has diversified business areas into fittings, valves, regulators and gas filters for Semiconductor Industry

ORDERING INFORMATION

D	11	PT1	–	2W	–	052	R	–	N2
Material	Size	Series Name		Connection Type		Pressure Range	Pressure Reference / Rated analog out put range		Output Specification
D : 316L Stainless steel VAR	11 :1.125 Inch 15 :1.5 Inch	PT1		2W : W-seal 2C : C-seal		052 : 0.5MPa 103 : 1.0MPa	G :Gauge pressure(Positive) /0MPa~Rated pressure R : Gauge pressure(Compound) /-0.1MPa~Rated pressure		B : SW Nothing N2 : SW Two output NV : SW One output(1~5V) NA : SW One output(4~20mA)

* NPN is the basic type for the switch output. Please contact us if PNP output is necessary.

MAJOR CONFIGURATION

■ 11PT1-2W-***R/G-**

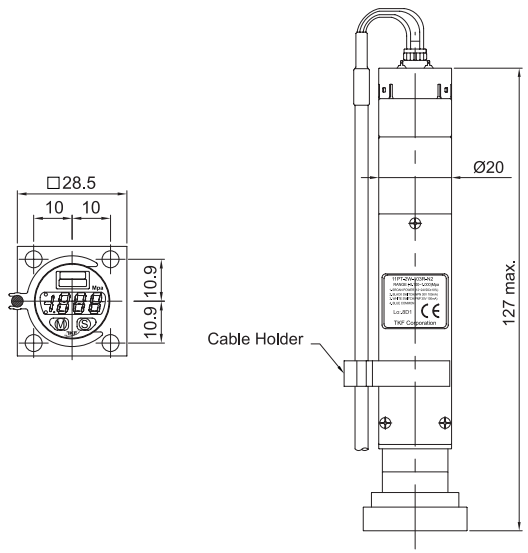

■ 15PT1-2W-***R/G-**

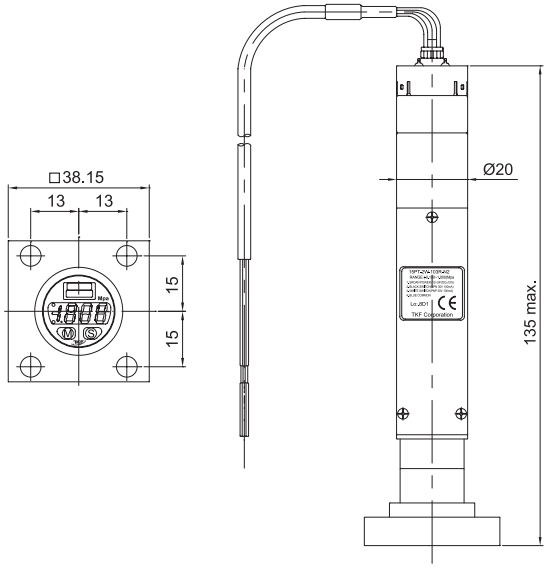

SPECIFICATIONS

Application		Semiconductor Process Gases	
Rated Pressure range	Positive (G)	0 ~ 0.5Mpa	0 ~ 1.0Mpa
	Compound (R)	-0.1 ~ 0.5Mpa	-0.1 ~ 1.0Mpa
Max. Pressure		0.75Mpa	1.5Mpa
Vacuum pressure		1.4 X 10^{-4}Pa abs maximum	
Leakage (He vacuum method)		5 X 10^{-12}Pa.m^3/sec. maximum(Weld in pressure port)	
Operating temp. range		-10 ~ 50°C(No condensation)	
Compensated temp. range		0 ~ 50°C(35 ~ 85%RH)	
Media		Gases and Liquids compatible with SUS316L	
Pressure contact material		316L Stainless steel VAR (Fitting and Sensor)	
Pressure contact roughness		(Ra : 0.15, Rz : 0.7)μinch maximum	
Pressure contact particle		Zero count of particle of the size 0.1m μm or bigger	
Operating voltage		Current output type : 24DC±10%(including ripple) Voltage output type and other : 12 ~ 24VDC±10%(including ripple)	
Current consumption		30mA maximum(No current flow from switch / analog output)	
Display Method		3 · 1 / 2 LED display (Red LED)	
Rotation angle		270° (90° step)	
Display accuracy		±1.0%FS(The repeatability, liniality and hysteresis are contained)	
Thermal error		±1.0%FS / °C(0 ~ 50°C Reference temp. 25°C)	

ULTRA HIGH PURITY PRESSURE TRANSDUCER

PT2 SERIES

FEATURES

- External diameter 20mm. Easily installable fitting block
- Wide combination of output types (current or voltage) available
- Integrally welded structure of sensing chip and fitting block
- Compatible with CE marking

TK-FUJIKIN corporation has diversified business areas into fittings, valves, regulators and gas filters for Semiconductor Industry

ORDERING INFORMATION

D	11	PT2	–	2W	–	052	G	–	V1
Material	Size	Series Name		Connection Type		Pressure Range	Pressure Reference / Rated analog out put range		Output Specification
D : 316L Stainless steel VAR	11 : 1.125 Inch 15 : 1.5 Inch	PT2		2W : W-Seal 2C : C-Seal		052 : 0.5MPa 103 : 1.0MPa	G : Gauge pressure (Positive) / 0MPa~Rated pressure R : Gauge pressure (Compound) / -0.1MPa ~ Rated pressure		V1 : 1~5V A1 : 4~20mA(3 Wire) A2 : 4~20mA(2 Wire)

MAJOR CONFIGURATION

■ D11PT2-2W-***R/G-**

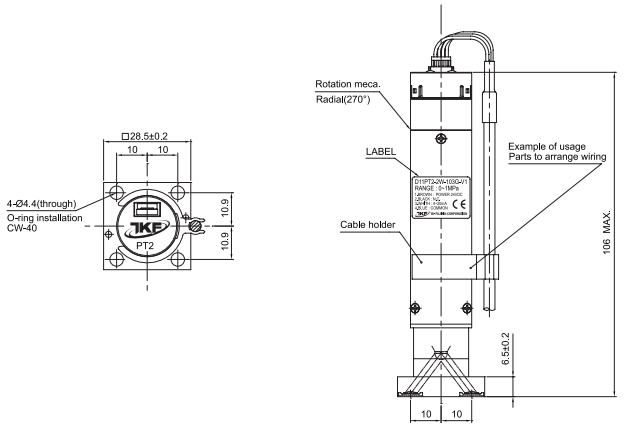

■ D15PT2-2W-***R/G-**

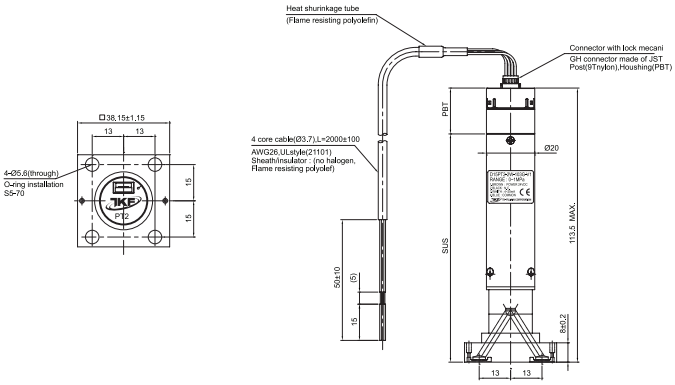

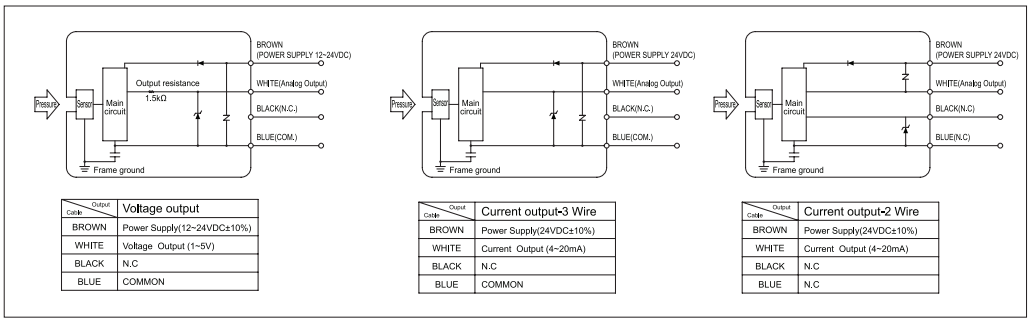

Output / Cable	Voltage output
BROWN	Power Supply(12~24VDC±10%)
WHITE	Voltage Output (1~5V)
BLACK	N.C
BLUE	COMMON

Output / Cable	Current output-3 Wire
BROWN	Power Supply(24VDC±10%)
WHITE	Current Output (4~20mA)
BLACK	N.C
BLUE	COMMON

Output / Cable	Current output-2 Wire
BROWN	Power Supply(24VDC±10%)
WHITE	Current Output (4~20mA)
BLACK	N.C
BLUE	N.C

SPECIFICATIONS

Spec. item	Mode			
Pressure	Rated pressure range		052	103
		Positive(G)	0 ~ 0.5MPa	0 ~ 1.0MPa
		Compound(R)	-0.1 ~ 0.5MPa	0.1 ~ 1.0MPa
	Max. pressure		0.75MPa	1.5MPa
	Vacuum pressure		1.4 X 10^{-4}Pa abs maximum	
	Leakage		5 X 10^{-12}Pa · m^3 / sec. maximum	
	Acceptable media		Gases and Liquids compatible with SUS316L	
Power supply	Operating voltage	Current output type	24VDC±10%	
		Voltage output type	12 ~ 24VDC±10	
	Current consumption		10mA maximum	
	Insulation resistance		DC125V 50MMΩ minimum	
	Dielectric strenght		DC125V 1minuts (current leakage : 5mA max.)	
Alaog output	Output accuracy		±1% FS	
	Themal error		±0.1%FS / ℃ (0~50℃ Reference tem. At 25℃)	
	Response		1ms maximum (A2 : 2ms maximum)	
Pressure contact	Everything		316L Stainless steel, Double melt	
	Roughness		Ra : 0.15μinch(Ave.), Ry 0.7μm(Max.)	
Other	Operating temperature		-10 ~ 50℃	
	EMC	EMC directive	2004 / 108 / EC	
		Applicable standards	EN61326-1 : 2006, EN61326-2-3 : 2006 (EMI : classB, EMS : Annex BB)	
	IP protection		Close type structure (IEC standard IP40)	
	Cable spec.		4core cable(▸3.7), AWG26, UL21101	

ULTRA HIGH PURITY PRESSURE TRANSDUCER

PT3 SERIES

FEATURES

- External diameter 20mm. Easily installable fitting block
- Compact and smallest design
- Wide combination of output types (current or voltage) available
- Integrally welded structure of sensing chip and fitting block
- C.E approved / ROHS2 compliant

TKF corporation has diversified business areas into fittings, valves, regulators and gas filters for Semiconductor Industry

ORDERING INFORMATION

D	11	PT3	–	2W	–	052	G	–	V1
Material	Size	Series Name		Connection Type		Pressure Range	Pressure Reference / Rated analog out put range		Output Specification
D : 316L Stainless steel VAR	11 : 1.125 Inch 15 : 1.5 Inch 4 : 1/4 Inch	PT2		2W : W-Seal 2C : C-Seal VF : MFS female		052 : 0.5 MPa 103 : 1.0 MPa 143 : 1.38 MPa	G : Gauge pressure(positive) / 0 MPa ~ rated pressure R : Gauge pressure(compound) / -0.1 MPa ~ rated pressure		V1 : 1 ~ 5V A2 : 4 ~ 20 mA (2-wire)

OUTLINE DIMENSIONS

■ D11PT3-2W-****-**

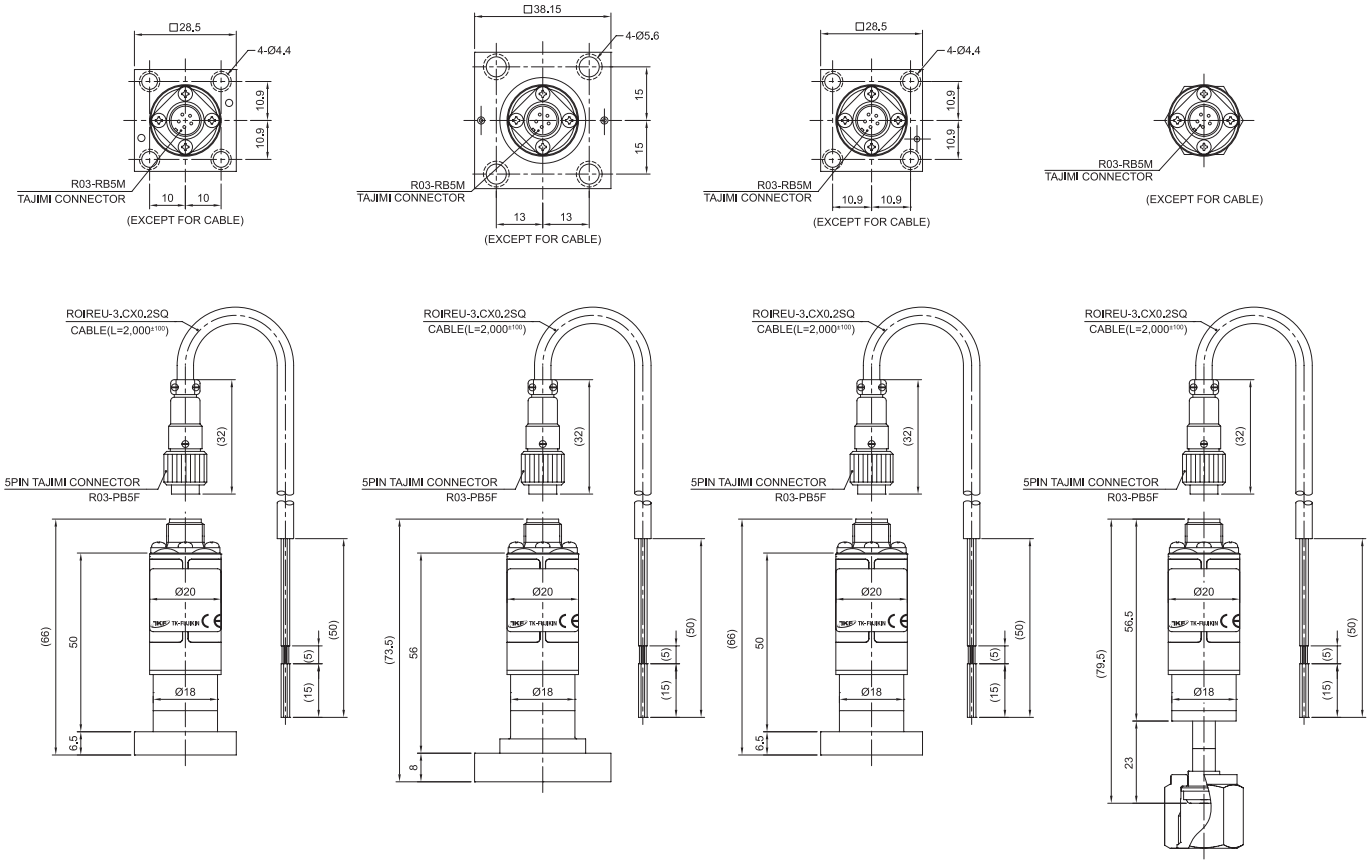

■ D15PT3-2W-****-**

■ D11PT3-2C-****-**

■ D4PT3-VF-****-**

INTERNAL ELECTIRCAL DIAGRAMS

■ Voltage output(V1)

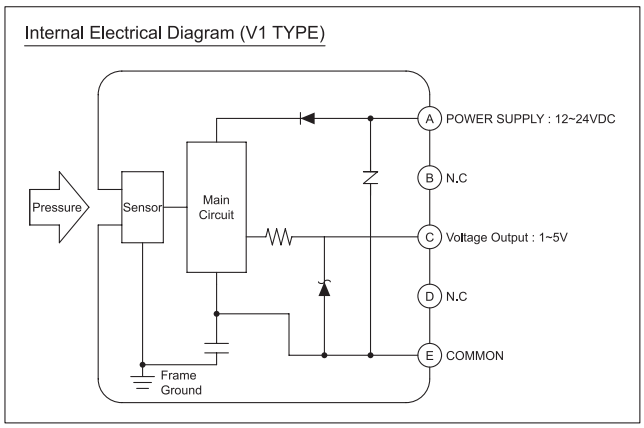

■ Current output 2-wire(A2)

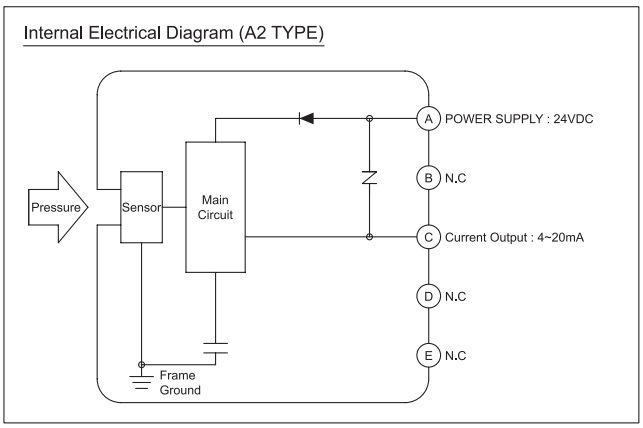

SPECIFICATIONS

Item			Model: PT3 Series 052	103	143
General specification	Pressure reference		Gauge pressure		
	Rated pressure range	Positive (G)	0 ~ 0.5MPa	0 ~ 1.0MPa	0 ~ 1.38MPa
		Compound (R)	-0.1 ~ 0.5MPa	-0.1 ~ 1.0MPa	-0.1 ~ 1.38MPa
	Max. pressure		0.75MPa	1.5MPa	3MPa
	Vacuum pressure		1.4×10^{-4} Pa abs maximum		
	Leakage		5×10^{-12} Pa·m³ / sec maximum (He leak)		
	Operating temperature		-10 ~ 70°C		
	Compensated temperature		0 ~ 60°C		
	Operating relative humidity		35 ~ 85%RH (No condensation)		
	Storage temperature		-20 ~ 70°C (Atmospheric pressure, humidity 65%RH maximum)		
	Media		Gases and liquids compatible with 316L VAR stainless steel		
	Gas contact material		316L VAR stainless steel (Fitting and sensor)		
	Gas contact roughness		Ra : 0.15, Ry : 0.7μm maximum		
	Insulation resistance		DC125V 50MΩ minimum		
	Withstand voltage		DC125V 1minute (Leakage : 5mA maximum)		
	Gas contact particle		Zero count of particle of the size 0.1μm or bigger (By our inspection standard)		
	IP protection		IEC standard IP40		
	Weight		Approx. 180g(1.5”), approx. 90g(1.125”), approx. 80g(VF)		
Power supply	Operating voltage	Voltage output type	12 ~ 24VDC ±10% (Including ripple)		
		Current output type	24VDC ±10% (Including ripple)		
	Current consumption		10mA		
Analog output	Voltage output type range		1 ~ 5V (Load resistance : 5kΩ minimum / load current 1mA maximum)		
	Current output type range		4 ~ 20mA (Operating voltage : 24VDC / load resistance 500Ω maximum)		
	Output accuracy		±1%F.S		
	Thermal error		±0.1%FS / °C (0 ~ 60°C Reference temp. at 25°C)		
	Response		2ms maximum		
Other	Certification		CE [EMC(EN61000-6-2, EN61000-6-4)]		
	Cable		ROIREU-3CX0.2SQ		

ULTRA HIGH PURITY PRODUCT SERIES

CANISTER

OVERVIEW

Upper and lower part united canister that is designed for research purposes and so only uses a small amount of chemicals.
It is an exchangeable type of canister, which is generally used in university labs or research centers, and the level sensor is not applied to this canister.
With the bubbler method applied, it is used mainly in processes where chemicals with low vapor pressure are vaporized and transported.
Canister is a sort of container used for safely keeping precursor in CVD and ALD process without any leakage and spoil while storing, moving and using precursor.
Also, canister is used for delivering precursor to equipment or system in proper ways according to equipment specifications and process conditions

TK-FUJIKIN corporation has diversified business areas into fittings, valves, regulators and gas filters for Semiconductor Industry

FEATURES

- Design & Manufacturing according to UHP Semi and ISO 18172-1 Standards
- Vertical (Horizontal) Electropolished Stainless Steel Bubbler with Fill Port is available
- High Pressure Diaphragm Valve (3/8″)
- Connection Size : 1/4″, 3/8″, 1/2″
- Connection Type : MFS (Metal Face Seal) Type
- Volume (Liter) : 0.1, 0.2, 0.4, 0.5, 1.0, 2.5, 4.5, 5.0, 6.0, 10, 20, 100, 200
- Design Pressure : 1.9kg/cm^2
- Flow Control : Valve + MFC (Mass Flow Control)

KIND OF CANISTER TYPE

- VFC(Vapor Flow Control) Type : Deliver a small volume of Precursor when using Precursor that has characteristics of High vapor pressure and nature vaporization
- Bubbler Type : Deliver a small volume of Precursor after vaporizing Precursor of usual vapor pressure
- DLI(Direct Liquid Injection) Type : Deliver at liquid state and vaporize it by a vaporizer when using Precursor of low vapor pressure or needing high vaporization volume
- Flow Control : Valve + MFC (Mass Flow Control)

SPECIFICATION

CLASS	SPECIFICATION
TRANSFER TYPE	Bubbler, VFC, DLI
VOLUME(ℓ)	0.1 ~ 200
VALVE TYPE	Diaphragm Valve
PURGE VALVE	None
GASKET	None
INLET / OUTLET PORT	1/4″, 3/8″, 1/2″Metal Face Seal
REFILL PORT	1/2″Male VCR

PRODUCT CONCEPT

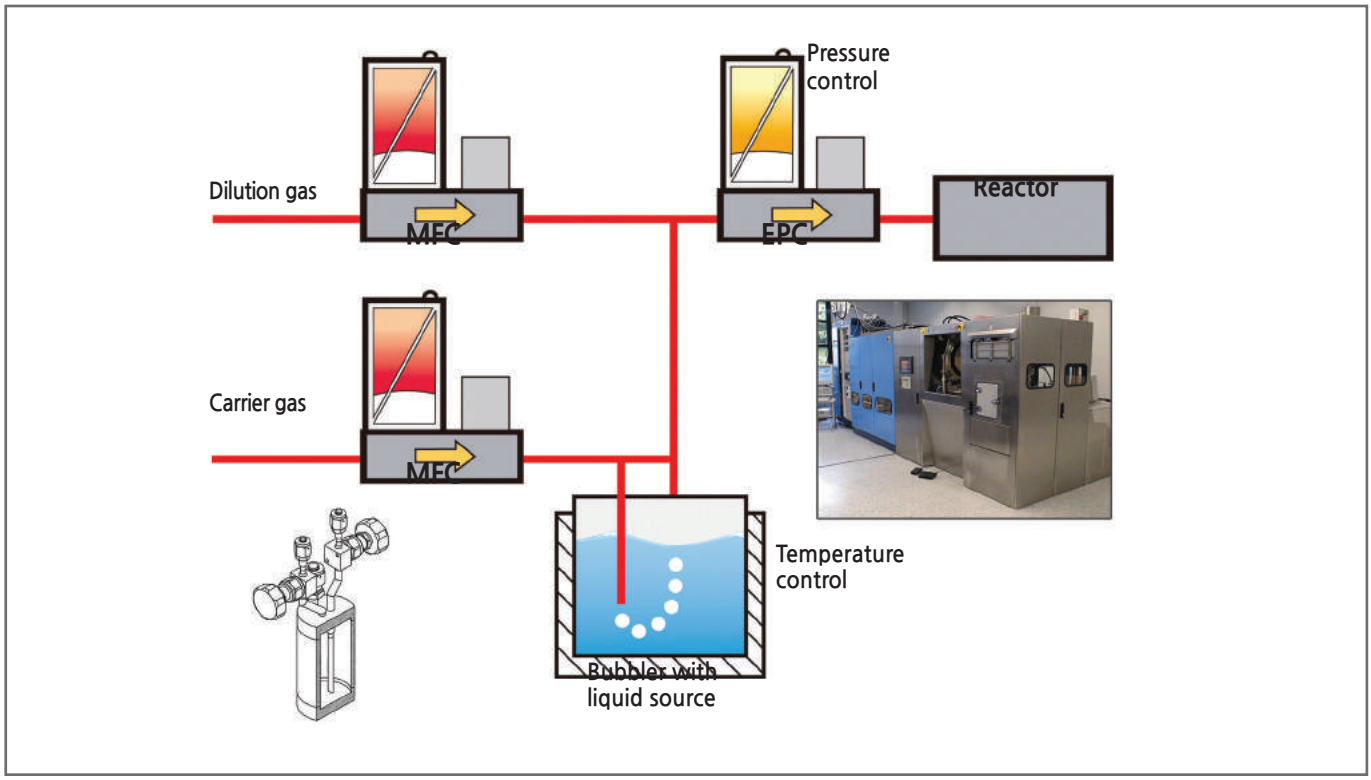

MEMO

GENERAL INDUSTRIAL PRODUCTS

FITTING SERIES

Tube Fittings (T-Lok)

T-Lok Single Ferrule Tube Fittings (TO Series)

PFA Hose Fittings

Push-On Hose Fittings(TPO Series)

Instrument Pipe & Weld Fittings

Tube Fittings

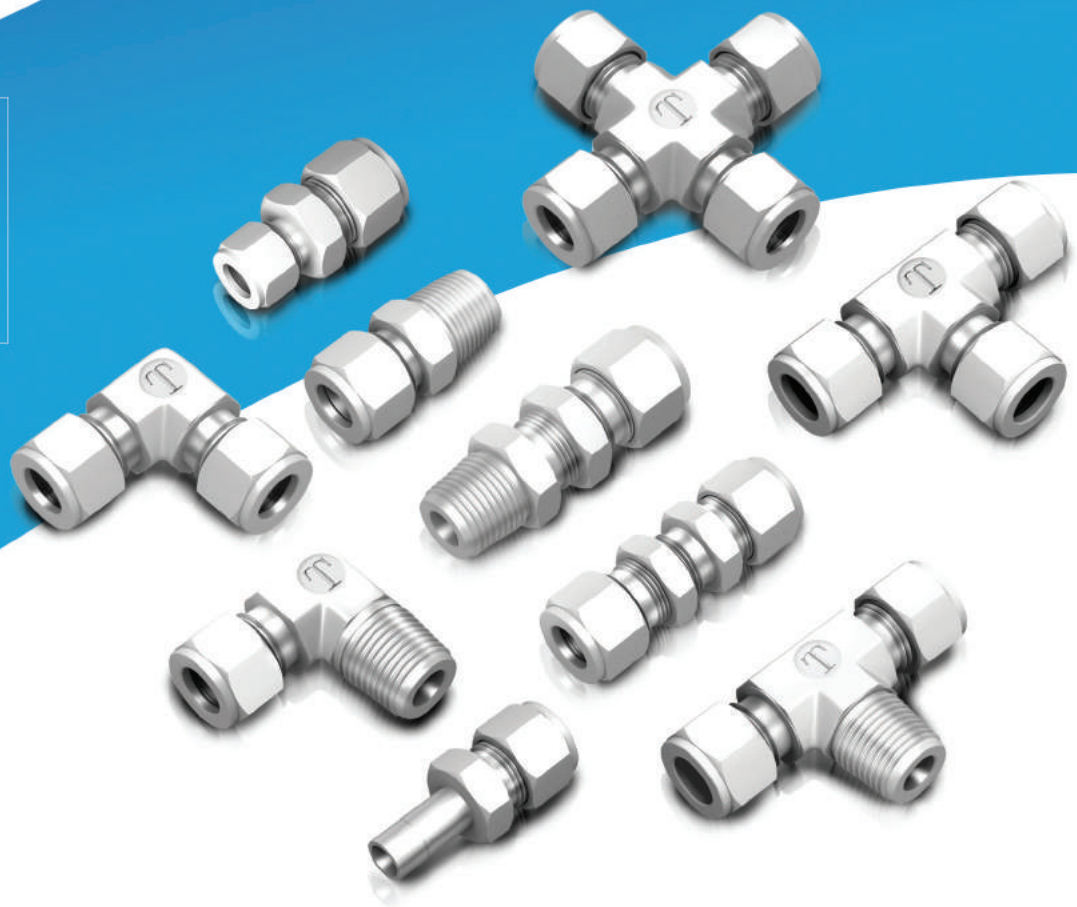

T-LOK

- Leakproof Tube Fittings
- Size from 1/16 to 2 inch and 3 to 38mm is available
- Convenient to disconnect and assemble
- Various materials and appearance

TK-FUJIKIN CORPORATION
Fujikin Carp Group

INDEX

ORDERING INFORMATION

B	—	T	MC	—	4	☐	—	4	N
1		2	3		4	5		4	5

1. MATERIAL DESIGNTOR

Material	Designator
Stainless Steel 316/316L	Blank
Brass	B

2. T-LOK TUBE FITTING

3. FITTING TYPE

Description	Designator
Union	U
Reducing Union	RU
Union Tee	UT
Reducing Union Tee	RUT
Union 90° Elbow	UE
Female Connector	FC
Reducer	R
Reducing Port Connector	RPC
Port Connector	PC
Male Connector	MC
Male Pipe Weld Connector	MPWC
Tube Socket Weld Connector	TSWC
Male 90° Elbow	ME
Male Pipe Weld 90° Elbow	MPWE
Tube Socket Weld 90° Elbow	TSWE
Female 90° Elbow	FE
Male Run Tee	MRT
Female Run Tee	FRT
Male Branch Tee	MBT
Female Branch Tee	FBT
Bulkhead Union	BU
Bulkhead Female Connector	BFC
Bulkhead Reducer	BR
Bulkhead Male Connector	BMC
Union Cross	UC
Cap	C
Plug	P
Female Tube Adapter	FTA
Male Tube Adapter	MTA
Male 45° Elbow	MHE
Back Ferrule	BF
Front Ferrule	FF
Ferrule Set	FS
Female Nut	FN
Nut-Ferrule Set	NFS
Male Nut	MN
Tube Insert	TI

4. CONNECTION SIZE

Size	Designator
1/16"	1
1/8"	2
3/16"	3
1/4"	4
5/16"	5
3/8"	6
1/2"	8
5/8"	10
3/4"	12
7/8"	14
1"	16
1 1/4"	20
1 1/2"	24
2"	32

Size	Designator
2mm	2M
3mm	3M
4mm	4M
6mm	6M
8mm	8M
10mm	10M
12mm	12M
14mm	14M
15mm	15M
16mm	16M
18mm	18M
20mm	20M
22mm	22M
25mm	25M
28mm	28M
32mm	32M
38mm	38M
42mm	42M

5. CONNECTION TYPE

Description	Designator
T-LOK	Blank
NPT	N
	NOR
ISO Tapered	P
ISO Parallel	RS
	RP
	PR
	RG
Unified Screw	SR
	OR
	ST
Male Pipe Weld	TW
Tube Socket Weld	SW
Thermocouple Connector	TC

T-LOK INSTALLATION INSTRUCTIONS

FEATURES

T-LOK is a high performance tube fitting that combines the sealing properties and quality control technologies required for power plant instrumentation fittings, other industies and the ultra-pure construction required used in fittings used in semiconductor manufacturing equipment.
T-LOK is new value series that provides high performance, cost effectiveness, and quick delivery.
T-LOK tube fittings combine leading edge manufacturing technology and exceptional cost performance.

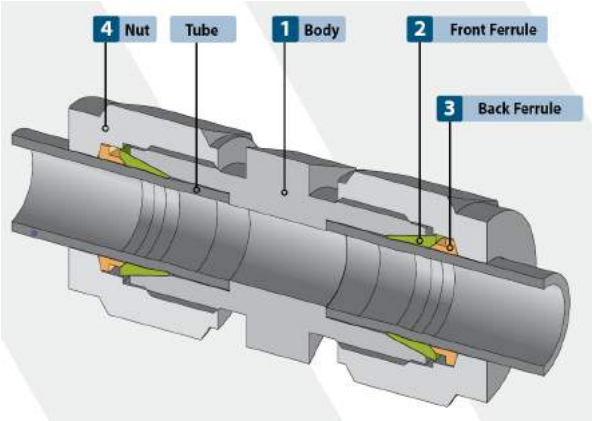

MATERIALS

Description	Bar Stock	Forgings
Stainless Steel 316 / 316L 304 / 304L	ASTM A276, ASME SA276 ASTM A479, ASME SA479	ASTM A182 ASME SA182
Brass	JIS C3604 ASTM B16 Alloy 360 ASTM B453 Alloy 345 C3601-C3604	JIS C3771BE ASTM B283 Alloy 377 ASTM B124 Alloy 377 C371-C3771

TUBING TEMPERATURE RANGES

Tubing Material	Temperature Range
Stainless Steel	-321°F to 1200°F (-196°C to 649°C)
Brass	-65°F to 400°F (-54°C to 204°C)

ALLOWABLE WORKING TEMPERATURE

When Elastomer seal is used in the fitting, care must be taken for allowble working temperature.

Elastomer seal material	Working Temperature
NBR (Perbunan®)	-40°F to 212°F (-40°C to 100°C)
FKM (Viton®)	-15°F to 450°F (-26°C~232°C)
FFKM (Kalrez®)	-22°F to 527°F (-30°C~275°C)
PTFE (Teflon®)	-65°F to 450°F (-54°C to 232°C)

INSTALLING FITTINGS NEAR TUBE BENDS

Before tightening T-LOK fittings, the end of the tube must be flush against the shoulder of the body hex.
Therefore, when installing fittings near tube bends, there must be a sufficient straight length of tubing to allow for proper installation.
(see the table to the left)

Fractional (INCH)		Metric (mm)	
T Tube OD	L	T Tube OD	L
1/16"	1/2	3	19
1/8"	23/32	6	21
3/16"	3/4	8	23
1/4"	13/16	10	25
5/16"	7/8	12	31
3/8"	15/16	14	32
1/2"	13/16	15	
5/8"	1 1/4	16	
3/4"		18	
7/8"	1 5/16	20	34
1"	1 1/2	22	
1 1/4"	2	25	40
1 1/2"	2 13/32	28	46
2"	3 1/4	30	50
		32	54
		38	63

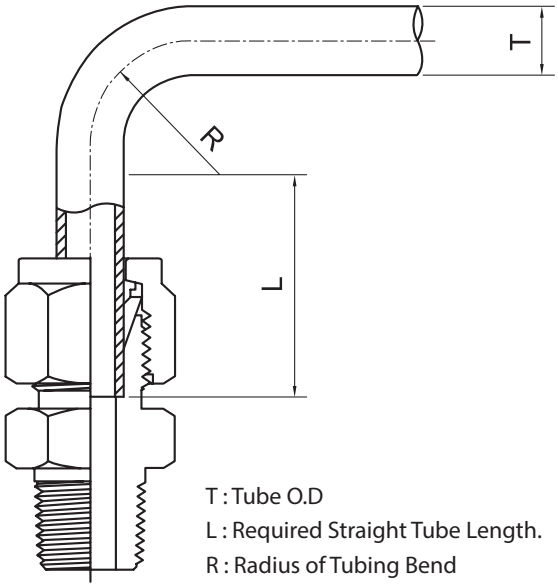

T : Tube O.D
L : Required Straight Tube Length.
R : Radius of Tubing Bend

TUBING DATA FOR STAINLESS STEEL

TABLE 1: MAXIMUM ALLOWABLE WORKING PRESSURE FOR STAINLESS STEEL TUBING

- Fully Annealed seamless type 304/304L, 316/316L to ASTM A269 or equivalent
- Hardness: RB90 or less

Tube O.D. INCH	Tube Wall Thickness (INCH)															
	0.010	0.012	0.014	0.016	0.02	0.028	0.035	0.049	0.065	0.083	0.095	0.109	0.120	0.134	0.156	0.188
	Working Pressure (psig)															
1/16"	5600	6800	8100	9400	12000											
1/8"						8500	10900									
3/16"						5400	7100	10200								
1/4"						4000	5100	7500	10200							
5/16"							4000	5800	8000							
3/8"							3300	4800	6500							
1/2"							2600	3750	5100	6700						
5/8"								2900	4000	5200	6000					
3/4"								2400	3300	4200	4900	5800				
7/8"								2000	2800	3600	4200	4800				
1"									2400	3100	3600	4200	4700			
1 1/4"										2400	2800	3300	3600	4100	4900	
1 1/2"											2300	2700	3000	3400	4000	4900
2"												2000	2200	2500	2900	3600

Tube O.D. mm	Tube Wall Thickness (mm)												
	0.8	1.0	1.2	1.5	1.8	2.0	2.2	2.5	2.8	3.0	3.5	4.0	4.5
	Working Pressure (psig)												
3	10400	13700											
4	7500	9700	12100										
6	4780	6230	7500	9800									
8		4490	5500	7100									
10		3480	4350	5500	6800	7680							
12		2900	3480	4490	5500	6230							
14		2610	3190	4060	4930	5650	6230						
15		2465	2900	3770	4640	5220	5800						
16			2755	3480	4350	4780	5360	6230					
18			2465	3040	3770	4200	4780	5510					
20			2175	2755	3330	3770	4200	4780	5510				
22			2030	2465	3045	3480	3770	4350	4930				
25				2175	2610	2900	3330	3770	4350	4640			
28						2610	2900	3330	3770	4060	4780		
30						2465	2755	3045	3480	3770	4490		
32						2320	2465	2900	3335	3480	4200	4780	
38							2030	2465	2755	2900	3480	4060	4490

■ According to the requirements of ASME B31.3 (Process piping Code)

■ Allowable working pressures are calculated from an S value of 20,000psi for ASTM A269 Tubing (at -20 to 100°F(-28 to 37°C))

■ Safety Factor: 3.75 : 1, Ultimate tensile strength of 75,000psi

■ For Weld Tubing Pressure
- ASME 31.1(Power Piping Code)
- for double welded tubing: working pressure x 0.85
- for single welded tubing: working pressure x 0.80

■ For gas service, select a tube wall thickness outside of the shaded area.

TUBING DATA FOR COPPER

TABLE 2: MAXIMUM ALLOWABLE WORKING PRESSURE FOR COPPER TUBING

- Soft annealed seamless copper tubing, ASTM B75 or equivalent. (Temper O with Max. hardness 60)
- Seamless water tubing type K or type L to ASTM B88 (Temper O with Max. hardness 50)

Tube O.D. INCH	Tube Wall Thickness (INCH)										
	0.010	0.012	0.028	0.030	0.035	0.049	0.065	0.083	0.095	0.109	0.120
	Working Pressure (psig)										
1/16"	1650	2100	6700	9800							
1/8"			2800	3000	3600						
3/16"			1800	1900	2300	3400					
1/4"			1300	1400	1600	2500	3600				
5/16"					1300	1900	2700				
3/8"					1000	1600	2200				
1/2"					800	1100	1600	2100			
5/8"						900	1200	1600	1900		
3/4"						700	1000	1300	1500	1800	
7/8"						600	800	1100	1300	1500	
1"						500	700	900	1100	1300	1500

Tube O.D. mm	Tube Wall Thickness (mm)									
	0.8	1.0	1.2	1.5	1.8	2.0	2.2	2.5	2.8	3.0
	Working Pressure (psig)									
3	3300	4640								
4	2465	3190	4200							
6	1595	2030	2465	3190	4200					
8	1100	1450	1740	2320	2900					
10	900	1160	1450	1885	2300	2600				
12	750	870	1160	1450	1885	2030				
14		725	870	1305	1595	1740	1885	2300		
15			870	1160	1450	1595	1740	2100		
16				1015	1305	1450	1595	1740		
18				870	1160	1305	1450	1595	1885	2100
20				870	1015	1160	1305	1450	1595	1885
22				725	870	1015	1160	1305	1450	1740
25				580	725	870	1015	1160	1305	1450
28					580	725	870	1015	1160	1305

- According to the requirements of ASME B31.3(Process piping Code)
- Allowable working pressures are calculated from an S value of 6,000psi for ASTM B75 & B88 Tubing (at -20 to 100°F(-28 to 37°C))
- Safety Factor: 3.75 : 1, Ultimate tensile strength of 30,000psi
- For gas service, select a tube wall thickness outside of the shaded area.

TUBING DATA

TABLE 3: TEMPERATURE DERATING FACTORS

Temperature		Tubing Materials	
°F	°C	Stainless Steels	Copper
100	38	1.00	1.00
200	93	1.00	0.80
300	149	1.00	0.78
400	204	0.96	0.50
500	260	0.90	-
600	315	0.85	-
700	371	0.82	-
800	426	0.79	-
900	482	0.78	-
1000	537	0.76	-
1100	593	0.62	-
1200	649	0.37	-

■ To determine allowable pressure at higher temperature, multiply allowable working pressure from Table1, 2 by factors shown in Table 3.

■ For Example

- Stainless steel tubing 1/2" O.D. X 0.049" wall at 800°F(426°C)
- The elevated temperature factor for 800°F(426°C) is 0.79 (3,750psig X 0.79 = 2,962psig)

TABLE 4: GAS ALLOWABLE TUBING

Stainless Steel Tubing					Copper Tubing				
Metric		Fractional			Metric		Fractional		
Tube O.D.	Min. Nominal Wall Thickness	Tube O.D.	Min. Nominal Wall Thickness		Tube O.D.	Min. Nominal Wall Thickness	Tube O.D.	Min. Nominal Wall Thickness	
	mm		INCH	mm		mm		INCH	mm
3	0.8	1/8"	0.028	0.71	8	1.0	1/8"	0.028	0.71
6	0.8	3/16"	0.028	0.71	10	1.0	3/16"	0.028	0.71
8	1.0	1/4"	0.028	0.71	12	1.0	1/4"	0.028	0.71
10	1.0	5/16"	0.035	0.89	14	1.2	5/16"	0.035	0.89
12	1.0	3/8"	0.035	0.89	16	1.2	3/8"	0.035	0.89
14	1.2	1/2"	0.049	1.24	18	1.5	1/2"	0.049	1.24
16	1.5	5/8"	0.065	1.65	20	1.8	5/8"	0.065	1.65
18	1.5	3/4"	0.065	1.65	22	2.0	3/4"	0.065	1.65
20	1.8	7/8"	0.083	2.11	25	2.2	7/8"	0.083	2.11
22	2.0	1"	0.083	2.11	28	2.5	1"	0.083	2.11
25	2.2	1 1/4"	0.109	2.77					
28	2.5	1 1/2"	0.134	3.40					
32	3.0	2"	0.188	4.78					
38	3.5								

■ For Gas applications, we recommend tubing with a greater wall thickness.

■ Table 4 shows the recommended min thickness.

■ Wall thicknesses for greater safety and efficiency

Attention!

1. The value of Table 1, Table 2 are maximum allowable working pressure calculated from the tube thickness.
   The maximum allowable working pressure of the fitting is limited from the value of this table according to the application regulations, and use it, please after considering the application regulations and the standard of used equipment.
2. There is a possibility that the seal decreases remarkably, and consult separately, please when it is used for a long time exeeding 400°C.

PHYSICAL DIFFERENCES AND MARKING

T-LOK METRIC FITTINGS:

Union ELBOW (see Fig. 1)
Union TEE (see Fig. 2)
Union (see Fig. 3)
A Nut: Stepped Shoulder Marked T-LOK·316·6M·XXXX
B Body: Stepped Shoulder Marked T-LOK·316·XXXX

T-LOK INCH FITTINGS:

Union ELBOW (see Fig. 4)
Union TEE (see Fig. 5)
Union (see Fig. 6)
C Nut: Shoulder Marked T-LOK·316·1/4·XXXX
D Body: Shoulder Marked T-LOK·316·XXXX

UNION ELBOW

• METRIC

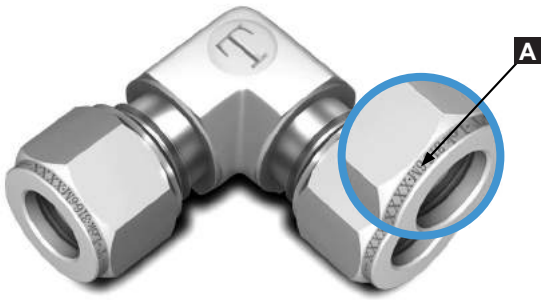

Fig. 1

• INCH

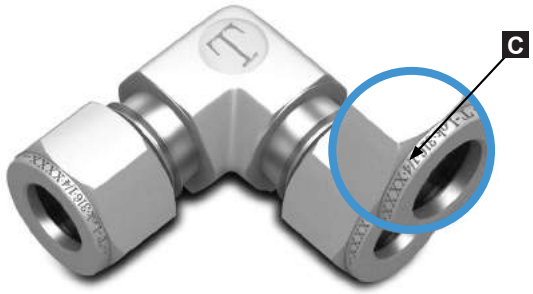

Fig. 4

UNION TEE

• METRIC

Fig. 2

• INCH

Fig. 5

UNION

• METRIC

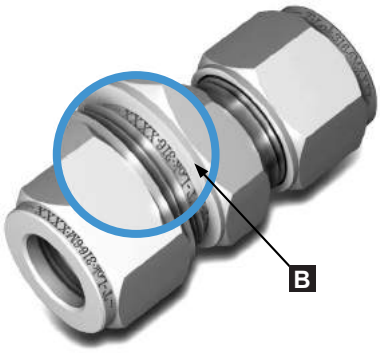

Fig. 3

• INCH

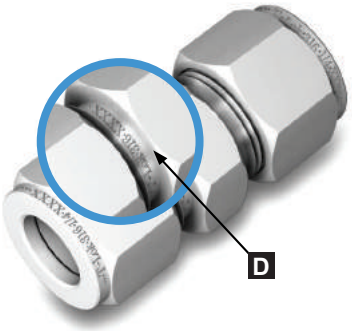

Fig. 6

Nut & Body of Metric type have Stepped Shoulder

T-LOK INSTALLATION INSTRUCTIONS

T-LOK Fittings are supplied assembled and finger tight. Disassembly before use can allow the entry of dirt or other particles.

Step 1. Insert the tubing into the fitting.

Insert the tubing into T-LOK Tube Fitting's inside. At this moment, Make sure that the tubing is completely contact with the shoulder of fittings and then finger-tighten the nut check that the tube rests firmly on the fitting shoulder and that the nut is finger tight.

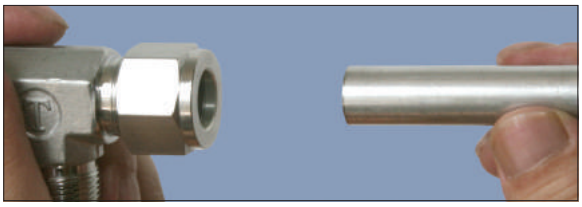

Step 2. Mark the starting point

Before tightening the T-LOK nut, it is recommended that a scribe mark be drawn on the hex of the nut extending onto the fitting body. This mark will serve as an indicator for the starting point and proper pull-up mark the starting point of turning at the 6 o'clock position.

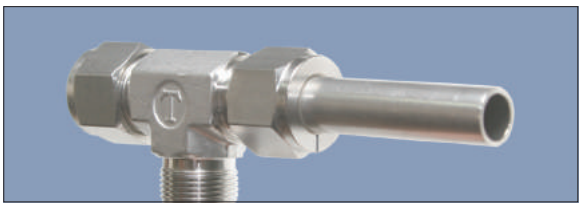

Step 3. Tighten the nut.

Hold the fitting body safely with a backup wrench and tighten the nut 1-1/4(pay attention to the mark of starting point of turning, make one revolution and place at 9 o'clock position marking the starting point of turning at the 6 o'clock position will let you notice where the starting point is)
1-1/4 turns of the nut are required for 1/4" (6 mm) and higher
3/4 turn of the nut is required for 3/16" (4 mm) and lower

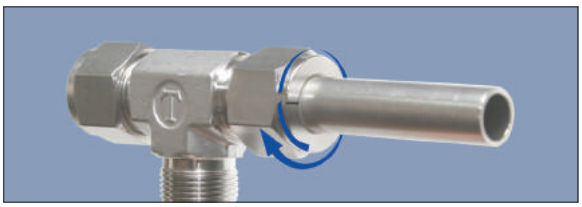

REASSEMBLY INSTRUCTIONS

T-LOK connections may be disconnected and remade repeatedly, without loss of leak tight seal.

1. Before disconnecting, mark the position of the nut in relation to the fitting body
2. To reassemble, use a wrench to tighten nut to original position.
3. Tighten slightly with wrench until a slight rise in torque is felt.

UNION

TU

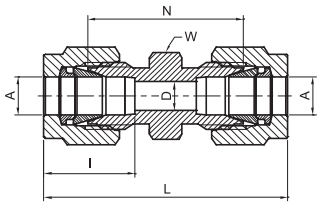

TUBE (METRIC) TO TUBE (METRIC)						
Part Number	A Tube O.D.	D	W Hex. flat	N	L	I
	mm	mm	mm	mm	mm	mm
TU - 2M	2	1.7	12	22.4	35.6	12.9
TU - 3M	3	2.4	12	22.1	35.3	12.9
TU - 4M	4	2.4	12	24.1	37.3	13.7
TU - 6M	6	4.8	14	26.2	41.0	15.3
TU - 8M	8	6.4	15	28.2	43.2	16.2
TU - 10M	10	7.9	18	31.0	46.2	17.2
TU - 12M	12	9.5	22	31.0	51.2	22.8
TU - 14M	14	11.1	24	31.8	52.0	24.4
TU - 15M	15	11.9	24	31.8	52.0	24.4
TU - 16M	16	12.7	24	31.8	52.0	24.4
TU - 18M	18	15.1	27	33.3	53.5	24.4
TU - 20M	20	15.9	30	34.8	55.0	26.0
TU - 22M	22	18.3	30	34.8	55.0	26.0
TU - 25M	25	21.8	35	40.4	65.0	31.3
TU - 28M	28	21.8	41	43.4	85.0	36.6
TU - 32M	32	28.6	46	51.3	97.3	42.0
TU - 38M	38	33.7	55	58.4	113.6	49.4
TU - 42M	42	36.0	55	64.0	126.2	55.1

TUBE (INCH) TO TUBE (INCH)												
Part Number	A Tube O.D.		D		W Hex. flat		N		L		I	
	in	mm	in	mm	in	mm	in	mm	in	mm	in	mm
TU - 1	1/16	1.58	0.05	1.27	5/16	7.9	0.69	17.52	0.99	25.14	0.34	8.6
TU - 2	1/8	3.17	0.09	2.28	7/16	11.1	0.88	22.35	1.40	35.56	0.50	12.7
TU - 3	3/16	4.76	0.12	3.04	7/16	11.1	0.95	24.13	1.47	37.33	0.54	13.7
TU - 4	1/4	6.35	0.19	4.82	1/2	12.7	1.03	26.16	1.61	40.89	0.60	15.3
TU - 5	5/16	7.93	0.25	6.35	9/16	14.3	1.11	28.2	1.69	42.90	0.64	16.3
TU - 6	3/8	9.52	0.28	7.11	5/8	15.9	1.19	30.22	1.77	44.95	0.66	16.9
TU - 8	1/2	12.70	0.41	10.41	13/16	20.6	1.22	30.98	2.02	51.30	0.90	22.9
TU - 10	5/8	15.87	0.50	12.70	15/16	23.8	1.25	31.75	2.05	52.07	0.96	24.4
TU - 12	3/4	19.05	0.62	15.74	1-1/16	27.0	1.31	33.27	2.11	53.59	0.96	24.5
TU - 14	7/8	22.22	0.72	18.28	1-3/16	30.2	1.38	35.05	2.17	55.11	1.02	25.9
TU - 16	1	25.40	0.88	22.35	1-3/8	34.9	1.59	40.38	2.55	64.77	1.23	31.2
TU - 20	1-1/4	31.75	1.09	27.70	1-3/4	44.5	1.89	48.00	3.63	92.20	1.62	41.2
TU - 24	1-1/2	38.10	1.34	34.00	2-1/8	54.0	2.11	53.60	4.25	107.95	1.97	50.0
TU - 32	2	50.80	1.81	45.97	2-3/4	69.9	2.94	74.67	5.88	149.35	2.66	67.6

"D" - Dimension is minimum opening - dimensions are for reference only, and are subject to change without notice.

REDUCING UNION

TRU

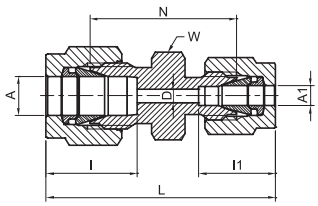

TUBE (METRIC) TO TUBE (METRIC)								
Part Number	A Tube O.D.	A1 Tube O.D.	D	W Hex. flat	N	L	I	I1
	mm	mm	mm	mm	mm	mm	mm	mm
TRU - 3M - 2M	3	2	1.7	12	22.1	35.3	12.9	12.9
TRU - 6M - 2M	6	2	1.7	14	24.6	38.6	15.9	12.9
TRU - 6M - 3M	6	3	2.4	14	24.6	38.6	15.9	12.9
TRU - 6M - 4M	6	4	2.4	14	25.4	39.4	15.9	13.7
TRU - 8M - 6M	8	6	4.8	15	27.4	42.3	16.2	15.3
TRU - 10M - 6M	10	6	4.8	18	29.5	44.5	17.2	15.3
TRU - 10M - 8M	10	8	6.4	18	30.0	45.1	17.2	16.2
TRU - 12M - 6M	12	6	4.8	22	29.5	47.0	22.8	15.3
TRU - 12M - 8M	12	8	6.4	22	30.2	47.8	22.8	16.2
TRU - 12M - 10M	12	10	7.9	22	31.0	48.7	22.8	17.2
TRU - 16M - 10M	16	10	7.9	24	31.8	49.5	24.4	17.2
TRU - 16M - 12M	16	12	9.5	24	31.8	52.0	24.4	22.8
TRU - 18M - 12M	18	12	9.5	27	33.3	53.5	24.4	22.8
TRU - 25M - 18M	25	18	15.1	35	38.6	61.0	31.3	24.4
TRU - 25M - 20M	25	20	15.9	35	39.9	62.3	31.3	26.0

TUBE (METRIC) TO TUBE (INCH)								
Part Number	A Tube O.D.	A1 Tube O.D.	D	W Hex. flat	N	L	I	I1
	mm	in	mm	mm	mm	mm	mm	mm
TRU - 2M - 4	2	1/4	1.7	14	24.0	38.6	12.9	15.3
TRU - 3M - 2	3	1/8	2.4	12	22.1	35.2	12.9	12.7
TRU - 4M - 2	4	1/8	2.4	12	23.4	36.5	13.7	12.7
TRU - 4M - 4	4	1/4	2.4	14	25.4	39.4	13.7	15.3
TRU - 6M - 2	6	1/8	2.4	14	24.6	38.5	15.3	12.7
TRU - 6M - 4	6	1/4	4.8	14	26.2	41.0	15.3	15.3
TRU - 6M - 5	6	5/16	4.8	14	27.4	42.3	15.3	16.2
TRU - 8M - 2	8	1/8	2.4	15	25.9	39.9	16.2	12.7
TRU - 8M - 4	8	1/4	4.8	15	27.4	42.3	16.2	15.3
TRU - 8M - 6	8	3/8	6.4	16	29.5	44.3	16.2	16.9
TRU - 10M - 2	10	1/8	2.4	18	27.1	41.8	17.2	12.7
TRU - 10M - 4	10	1/4	4.8	18	29.5	44.5	17.2	15.3
TRU - 10M - 5	10	5/16	6.4	18	30.0	45.1	17.2	16.2
TRU - 10M - 6	10	3/8	7.1	18	31.0	45.9	17.2	16.9
TRU - 12M - 5	12	5/16	6.4	22	30.2	47.8	22.8	16.2
TRU - 12M - 6	12	3/8	7.1	22	31.0	48.4	22.8	16.9
TRU - 12M - 8	12	1/2	9.5	22	31.0	51.2	22.8	22.9
TRU - 15M - 8	15	1/2	10.3	24	31.8	52.0	24.4	22.9
TRU - 16M - 10	16	5/8	12.7	24	31.8	52.0	24.4	24.4
TRU - 18M - 12	18	3/4	15.1	27	33.3	53.5	24.4	24.5

"D" - Dimension is minimum opening - dimensions are for reference only, and are subject to change without notice.

REDUCING UNION

TRU

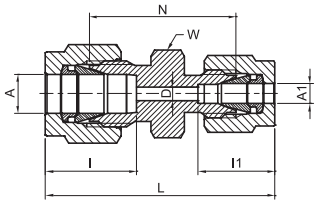

TUBE (INCH) TO TUBE (INCH)																
Part Number	A Tube O.D.		A1 Tube O.D.		D		W Hex. flat		N		L		l		l1	
	in	mm	in	mm	in	mm	in	mm	in	mm	in	mm	in	mm	in	mm
TRU - 2 - 1	1/8	3.17	1/16	1.58	0.05	1.27	7/16	11.1	0.81	20.57	1.22	30.98	0.50	12.7	0.34	8.6
TRU - 3 - 1	3/16	4.76	1/16	1.58	0.05	1.27	7/16	11.1	0.86	21.84	1.27	32.26	0.54	13.7	0.34	8.6
TRU - 3 - 2	3/16	4.76	1/8	3.17	0.09	2.28	7/16	11.1	0.92	23.36	1.44	36.57	0.54	13.7	0.50	12.7
TRU - 4 - 1	1/4	6.35	1/16	1.58	0.05	1.27	1/2	12.7	0.91	23.11	1.35	34.29	0.60	15.3	0.34	8.6
TRU - 4 - 2	1/4	6.35	1/8	3.17	0.09	2.28	1/2	12.7	0.97	24.63	1.52	38.60	0.60	15.3	0.50	12.7
TRU - 4 - 3	1/4	6.35	3/16	4.76	0.12	3.04	1/2	12.7	1.00	25.40	1.55	39.37	0.60	15.3	0.54	13.7
TRU - 5 - 2	5/16	7.93	1/8	3.17	0.09	2.28	9/16	14.3	1.01	25.65	1.56	39.62	0.64	16.3	0.50	12.7
TRU - 5 - 4	5/16	7.93	1/4	6.35	0.19	4.82	9/16	14.3	1.08	27.43	1.66	42.16	0.64	16.3	0.60	15.3
TRU - 6 - 1	3/8	9.52	1/16	1.58	0.05	1.27	5/8	15.9	1.00	25.40	1.44	36.58	0.66	16.9	0.34	8.6
TRU - 6 - 2	3/8	9.52	1/8	3.17	0.09	2.28	5/8	15.9	1.06	26.92	1.61	40.89	0.66	16.9	0.50	12.7
TRU - 6 - 4	3/8	9.52	1/4	6.35	0.19	4.82	5/8	15.9	1.12	28.44	1.70	43.18	0.66	16.9	0.60	15.3
TRU - 6 - 5	3/8	9.52	5/16	7.93	0.25	6.35	5/8	15.9	1.16	29.46	1.74	44.19	0.66	16.9	0.64	16.3
TRU - 8 - 2	1/2	12.70	1/8	3.17	0.09	2.28	13/16	20.6	1.12	28.44	1.78	45.21	0.90	22.9	0.50	12.7
TRU - 8 - 4	1/2	12.70	1/4	6.35	0.19	4.82	13/16	20.6	1.16	29.46	1.85	46.99	0.90	22.9	0.60	15.3
TRU - 8 - 6	1/2	12.70	3/8	9.52	0.28	7.11	13/16	20.6	1.22	30.98	1.91	48.51	0.90	22.9	0.66	16.9
TRU - 10 - 6	5/8	15.87	3/8	9.52	0.28	7.11	15/16	23.8	1.25	31.75	1.94	49.27	0.96	24.4	0.66	16.9
TRU - 10 - 8	5/8	15.87	1/2	12.70	0.41	10.41	15/16	23.8	1.25	31.75	2.05	52.07	0.96	24.4	0.90	22.9
TRU - 12 - 4	3/4	19.05	1/4	6.35	0.19	4.82	1-1/16	27.0	1.25	31.75	1.94	49.28	0.96	24.5	0.60	15.3
TRU - 12 - 6	3/4	19.05	3/8	9.52	0.28	7.11	1-1/16	27.0	1.31	33.27	2.00	50.80	0.96	24.5	0.66	16.9
TRU - 12 - 8	3/4	19.05	1/2	12.70	0.41	10.41	1-1/16	27.0	1.31	33.27	2.11	53.59	0.96	24.5	0.90	22.9
TRU - 12 - 10	3/4	19.05	5/8	15.87	0.50	12.70	1-1/16	27.0	1.31	33.27	2.11	53.59	0.96	24.5	0.96	24.4
TRU - 16 - 8	1	25.40	1/2	12.70	0.41	10.41	1-3/8	34.9	1.59	40.38	2.38	60.45	1.23	31.2	0.90	22.9
TRU - 16 - 12	1	25.40	3/4	19.05	0.62	15.75	1-3/8	34.9	1.59	40.38	2.38	60.45	1.23	31.2	0.96	24.5

"D" - Dimension is minimum opening - dimensions are for reference only, and are subject to change without notice.

UNION TEE

TUT

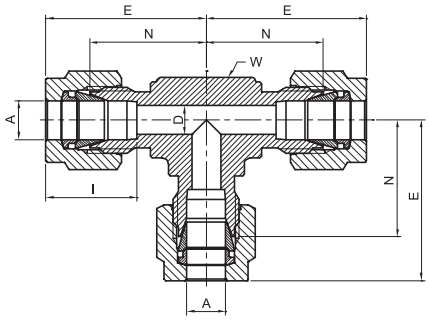

ALL TUBE (METRIC)							
Part Number	A Tube O.D.	D	W Hex. flat		N	E	I
	mm	mm	in	mm	mm	mm	mm
TUT - 2M	2	1.7	3/8	9.5	15.7	22.3	12.9
TUT - 3M	3	2.4	3/8	9.5	15.7	22.3	12.9
TUT - 4M	4	2.4	1/2	12.7	18.8	25.4	13.7
TUT - 6M	6	4.8	1/2	12.7	19.6	27.0	15.3
TUT - 8M	8	6.4	5/8	15.9	22.4	29.9	16.2
TUT - 10M	10	7.9	11/16	17.5	23.9	31.5	17.2
TUT - 12M	12	9.5	13/16	20.6	25.9	36.0	22.8
TUT - 14M	14	11.1	15/16	23.8	28.7	38.8	24.4
TUT - 15M	15	11.9	15/16	23.8	28.7	38.8	24.4
TUT - 16M	16	12.7	15/16	23.8	28.7	38.8	24.4
TUT - 18M	18	15.1	1-1/8	28.6	29.7	39.8	24.4
TUT - 20M	20	15.9	1-3/8	34.9	34.5	44.6	26.0
TUT - 22M	22	18.3	1-3/8	34.9	34.5	44.6	26.0
TUT - 25M	25	21.8	1-3/8	34.9	36.8	49.1	31.3
TUT - 28M	28	21.8	-	41.0	43.2	64.0	36.8
TUT - 32M	32	28.6	-	46.0	49.3	72.3	42.0
TUT - 38M	38	33.7	-	55.0	56.4	84.0	49.4
TUT - 42M	42	36.0	-	55.0	58.0	89.1	55.1

ALL TUBE (INCH)												
Part Number	A Tube O.D.		D		W Hex. flat		N		E		I	
	in	mm	in	mm	in	mm	in	mm	in	mm	in	mm
TUT - 1	1/16	1.58	0.05	1.27	3/8	9.5	0.56	14.00	0.70	17.80	0.34	8.6
TUT - 2	1/8	3.17	0.09	2.28	3/8	9.5	0.62	15.74	0.88	22.35	0.50	12.7
TUT - 3	3/16	4.76	0.12	3.04	1/2	12.7	0.70	17.80	0.96	24.40	0.54	13.7
TUT - 4	1/4	6.35	0.19	4.82	1/2	12.7	0.77	19.60	1.06	26.90	0.60	15.3
TUT - 5	5/16	7.93	0.25	6.35	5/8	15.9	0.88	22.35	1.17	29.71	0.64	16.3
TUT - 6	3/8	9.52	0.28	7.11	5/8	15.9	0.91	23.11	1.20	30.48	0.66	16.9
TUT - 8	1/2	12.70	0.41	10.41	13/16	20.6	1.02	25.90	1.42	36.10	0.90	22.9
TUT - 10	5/8	15.87	0.50	12.70	15/16	23.8	1.13	28.70	1.53	38.90	0.96	24.4
TUT - 12	3/4	19.05	0.62	15.74	1-1/16	27.0	1.17	29.70	1.57	39.90	0.96	24.5
TUT - 14	7/8	22.22	0.72	18.29	1-3/8	34.9	1.36	34.54	1.76	44.70	1.02	25.9
TUT - 16	1	25.40	0.88	22.35	1-3/8	34.9	1.45	36.80	1.93	49.00	1.23	31.2
TUT - 20	1-1/4	31.75	1.09	27.70	1-11/16	42.9	1.75	44.50	2.62	66.65	1.62	41.2
TUT - 24	1-1/2	38.10	1.34	34.00	2	50.8	2.00	50.80	3.07	77.98	1.97	50.0
TUT - 32	2	50.80	1.81	45.97	2-3/4	69.9	2.75	69.85	4.22	107.19	2.66	67.6

"D" - Dimension is minimum opening - dimensions are for reference only, and are subject to change without notice.

REDUCING UNION TEE

TRUT

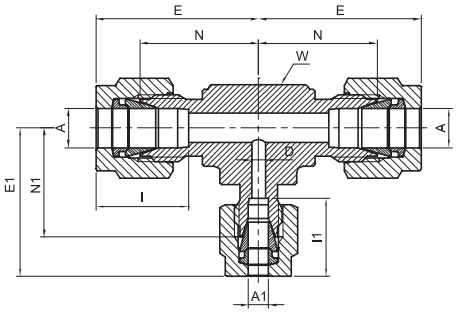

TUBE (INCH) TO TUBE (INCH)																				
Part Number	A Tube O.D.		A1 Tube O.D.		E		E1		I		I1		D		W Hex. flat		N		N1	
	in	mm	in	mm	in	mm	in	mm	in	mm	in	mm	in	mm	in	mm	in	mm	in	mm
TRUT - 6 - 6 - 4	3/8	9.52	1/4	6.35	1.20	30.5	1.14	29.0	0.66	16.9	0.60	15.3	0.19	4.8	5/8	15.9	0.91	23.1	0.85	21.6
TRUT - 8 - 8 - 4	1/2	12.70	1/4	6.35	1.42	36.1	1.25	31.8	0.90	22.9	0.60	15.3	0.19	4.8	13/16	20.6	1.02	25.9	0.96	24.4
TRUT - 8 - 8 - 6	1/2	12.70	3/8	9.52	1.42	36.1	1.31	33.3	0.90	22.9	0.66	16.9	0.28	7.1	13/16	20.6	1.02	25.9	1.02	25.9
TRUT - 10 - 10 - 6	5/8	15.88	3/8	9.52	1.53	38.9	1.42	36.1	0.96	24.4	0.66	16.9	0.28	7.1	15/16	23.8	1.13	28.7	1.13	28.7
TRUT - 12 - 12 - 6	3/4	19.05	3/8	9.52	1.57	39.9	1.46	37.1	0.96	24.5	0.66	16.9	0.28	7.1	1-1/16	27.0	1.17	29.7	1.17	29.7
TRUT - 12 - 12 - 8	3/4	19.05	1/2	12.70	1.57	39.9	1.57	39.9	0.96	24.5	0.90	22.9	0.41	10.4	1-1/16	27.0	1.17	29.7	1.17	29.7
TRUT - 16 - 16 - 6	1	25.4	3/8	9.52	1.93	49.0	1.65	41.9	1.23	31.2	0.66	16.9	0.28	7.1	1-3/8	34.9	1.45	36.8	1.36	34.5
TRUT - 16 - 16 - 8	1	25.4	1/2	12.70	1.93	49.0	1.76	44.7	1.23	31.2	0.90	22.9	0.41	10.4	1-3/8	34.9	1.45	36.8	1.36	34.5
TRUT - 16 - 16 - 12	1	25.4	3/4	19.05	1.93	49.0	1.76	44.7	1.23	31.2	0.96	24.5	0.62	15.8	1-3/8	34.9	1.45	36.8	1.36	34.5

HOW TO ORDER

A	A	A1

TRUT - 6 × 6 × 4

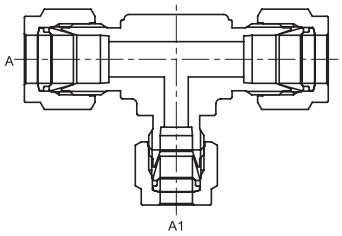

TUBE (INCH) TO TUBE (INCH)																				
Part Number	A Tube O.D.		A1 Tube O.D.		E		E1		I		I1		D		W Hex. flat		N		N1	
	in	mm	in	mm	in	mm	in	mm	in	mm	in	mm	in	mm	in	mm	in	mm	in	mm
TRUT - 6 - 4 - 6	3/8	9.52	1/4	6.35	1.20	30.5	1.14	29.0	0.66	16.9	0.60	15.3	0.19	4.8	5/8	15.9	0.91	23.1	0.85	21.6

"D" - Dimension is minimum opening - dimensions are for reference only, and are subject to change without notice.

REDUCING UNION TEE

TRUT

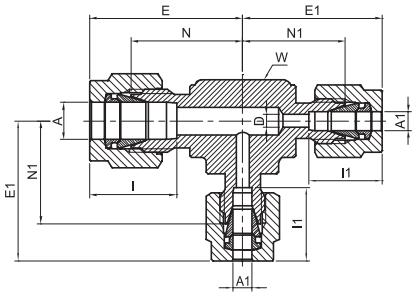

TUBE (INCH) TO TUBE (INCH)																				
Part Number	A Tube O.D.		A1 Tube O.D.		E		E1		I		I1		D		W Hex. flat		N		N1	
	in	mm	in	mm	in	mm	in	mm	in	mm	in	mm	in	mm	in	mm	in	mm	in	mm
TRUT - 8 - 6 - 6	1/2	12.70	3/8	9.52	1.42	36.1	1.31	33.3	0.90	22.9	0.66	16.9	0.28	7.1	13/16	20.6	1.02	25.9	1.02	25.9
TRUT - 10 - 6 - 6	5/8	15.88	3/8	9.52	1.53	38.9	1.42	36.1	0.96	24.4	0.66	16.9	0.28	7.1	15/16	23.8	1.13	28.7	1.13	28.7
TRUT - 12 - 6 - 6	3/4	19.05	3/8	9.52	1.57	39.9	1.46	37.1	0.96	24.5	0.66	16.9	0.28	7.1	1-1/16	27.0	1.17	29.7	1.17	29.7

HOW TO ORDER

A	A1	A1

TRUT - 8 × 6 × 6

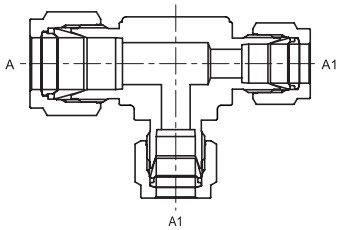

TUBE (INCH) TO TUBE (INCH)																										
Part Number	A Tube O.D.		A1 Tube O.D.		A2 Tube O.D.		E		E1		E2		I		I1		I2		D		W Hex. flat		N		N1+N2	
	in	mm	in	mm	in	mm	in	mm	in	mm	in	mm	in	mm	in	mm	in	mm	in	mm	in	mm	in	mm	in	mm
TRUT - 10 - 8 - 6	5/8	15.88	1/2	12.7	3/8	9.52	1.53	38.9	1.53	38.9	1.42	36.1	0.96	24.4	0.9	22.9	0.66	16.9	0.28	7.1	15/16	23.8	1.13	28.7	1.13	28.7
TRUT - 12 - 8 - 6	3/4	19.05	1/2	12.7	3/8	9.52	1.57	39.9	1.57	39.9	1.46	37.1	0.96	24.5	0.9	22.9	0.66	16.9	0.28	7.1	1-1/16	27.0	1.17	29.7	1.17	29.7
TRUT - 16 - 12 - 6	1	25.4	3/4	19.05	3/8	9.52	1.93	49	1.76	44.7	1.65	41.9	1.23	31.2	0.96	24.5	0.66	16.9	0.28	7.1	1 3/8	34.9	1.45	36.8	1.36	34.5

HOW TO ORDER

A	A1	A2

TRUT - 10 × 8 × 6

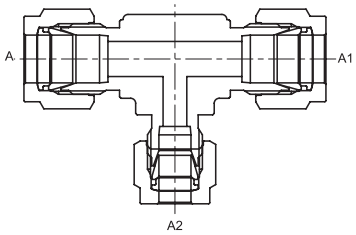

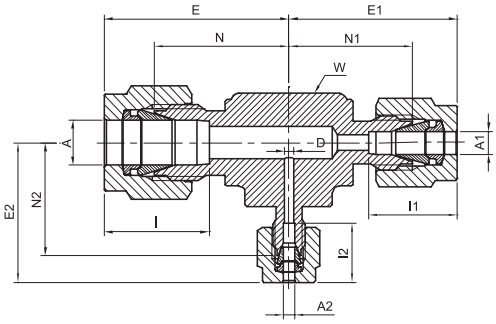

"D" - Dimension is minimum opening - dimensions are for reference only, and are subject to change without notice.

UNION 90° ELBOW

TUE

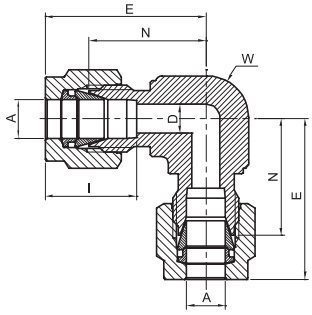

TUBE (METRIC) TO TUBE (METRIC)							
Part Number	A Tube O.D.	D	W Hex. flat		N	E	I
	mm	mm	in	mm	mm	mm	mm
TUE - 3M	3	2.4	3/8	9.5	15.7	22.3	12.9
TUE - 4M	4	2.4	1/2	12.7	18.8	25.4	13.7
TUE - 6M	6	4.8	1/2	12.7	19.6	27.0	15.3
TUE - 8M	8	6.4	9/16	14.3	21.3	28.8	16.2
TUE - 10M	10	7.9	11/16	17.5	23.9	31.5	17.2
TUE - 12M	12	9.5	13/16	20.6	25.9	36.0	22.8
TUE - 14M	14	11.1	15/16	23.8	27.9	38.0	24.4
TUE - 15M	15	11.9	15/16	23.8	27.9	38.0	24.4
TUE - 16M	16	12.7	15/16	23.8	27.9	38.0	24.4
TUE - 18M	18	15.1	1-1/8	28.6	29.7	39.8	24.4
TUE - 20M	20	15.9	1-3/8	34.9	34.5	44.6	26.0
TUE - 22M	22	18.3	1-3/8	34.9	34.5	44.6	26.0
TUE - 25M	25	21.8	1-3/8	34.9	36.8	49.1	31.3
TUE - 28M	28	21.8	-	41.0	43.2	64	36.6
TUE - 32M	32	28.6	-	46.0	49.3	72.3	42.0
TUE - 38M	38	33.7	-	55.0	56.4	84	49.4
TUE - 42M	42	36.0	-	55.0	58	89.1	55.1

TUBE (INCH) TO TUBE (INCH)												
Part Number	A Tube O.D.		D		W Hex. flat		N		E		I	
	in	mm	in	mm	in	mm	in	mm	in	mm	in	mm
TUE - 1	1/16	1.58	0.05	1.25	3/8	9.5	0.55	14.00	0.70	17.80	0.34	8.6
TUE - 2	1/8	3.17	0.09	2.28	3/8	9.5	0.62	15.74	0.88	22.35	0.50	12.7
TUE - 3	3/16	4.76	0.12	3.04	1/2	12.7	0.74	18.80	1.00	25.40	0.54	13.7
TUE - 4	1/4	6.35	0.19	4.82	1/2	12.7	0.77	19.60	1.06	26.92	0.60	15.32
TUE - 5	5/16	7.93	0.25	6.35	9/16	14.3	0.84	21.33	1.13	28.70	0.64	16.3
TUE - 6	3/8	9.52	0.28	7.11	5/8	15.9	0.91	23.11	1.20	30.48	0.66	16.9
TUE - 8	1/2	12.70	0.41	10.41	13/16	20.6	1.02	25.90	1.42	36.06	0.90	22.9
TUE - 10	5/8	15.87	0.50	12.70	15/16	23.8	1.10	27.94	1.50	38.10	0.96	24.4
TUE - 12	3/4	19.05	0.62	15.74	1-1/16	27.0	1.17	29.70	1.57	39.89	0.96	24.5
TUE - 14	7/8	22.22	0.72	18.28	1-3/8	34.9	1.36	34.5	1.76	44.70	1.02	25.9
TUE - 16	1	25.40	0.88	22.35	1-3/8	34.9	1.45	36.83	1.93	49.00	1.23	31.2
TUE - 20	1-1/4	31.75	1.09	27.70	1-11/16	42.9	1.75	44.50	2.62	66.55	1.62	41.2
TUE - 24	1-1/2	38.10	1.34	34.00	2	50.8	2.00	50.80	3.07	77.98	1.97	50.0
TUE - 32	2	50.80	1.81	45.97	2-3/4	69.9	2.75	69.85	4.22	107.19	2.66	67.6

"D" - Dimension is minimum opening - dimensions are for reference only, and are subject to change without notice.

FEMALE CONNECTOR

TFC

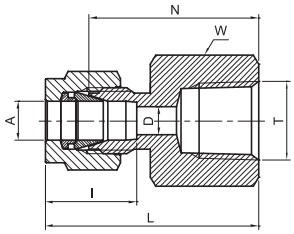

TUBE (METRIC) TO FEMALE NPT THREAD							
Part Number	A Tube O.D.	T NPT	D	W Hex. flat	N	L	I
	mm	in	mm	mm	mm	mm	mm
TFC - 3M - 2N	3	1/8	2.4	14	22.1	28.7	12.7
TFC - 3M - 4N	3	1/4	2.4	19	26.9	33.5	12.7
TFC - 4M - 2N	4	1/8	2.4	14	23.1	29.7	13.7
TFC - 6M - 2N	6	1/8	4.8	14	23.9	31.3	15.3
TFC - 6M - 4N	6	1/4	4.8	19	28.4	35.8	15.3
TFC - 6M - 6N	6	3/8	4.8	22	30.2	37.6	15.3
TFC - 6M - 8N	6	1/2	4.8	27	35.1	42.5	15.3
TFC - 8M - 2N	8	1/8	6.4	15	24.6	32.1	16.2
TFC - 8M - 4N	8	1/4	6.4	19	29.5	37.0	16.2
TFC - 8M - 6N	8	3/8	6.4	22	31.0	38.5	16.2
TFC - 8M - 8N	8	1/2	6.4	27	35.8	43.3	16.2
TFC - 10M - 4N	10	1/4	7.9	19	30.2	37.8	17.2
TFC - 10M - 6N	10	3/8	7.9	22	31.8	39.4	17.2
TFC - 10M - 8N	10	1/2	7.9	27	36.6	44.2	17.2
TFC - 12M - 4N	12	1/4	9.5	22	30.2	40.3	22.8
TFC - 12M - 6N	12	3/8	9.5	22	31.8	41.9	22.8
TFC - 12M - 8N	12	1/2	9.5	27	36.6	46.7	22.8
TFC - 15M - 8N	15	1/2	11.9	27	36.6	46.7	24.4
TFC - 16M - 8N	16	1/2	12.7	27	36.8	46.9	24.4
TFC - 20M - 8N	20	1/2	15.9	30	37.8	47.9	26.0
TFC - 20M - 12N	20	3/4	15.9	35	39.6	49.7	26.0
TFC - 22M - 12N	22	3/4	18.3	35	39.6	49.7	26.0
TFC - 22M - 16N	22	1	18.3	41	47.8	57.9	26.0
TFC - 25M - 12N	25	3/4	21.8	35	41.1	53.4	31.3
TFC - 25M - 16N	25	1	21.8	41	50.0	62.3	31.3

"D" - Dimension is minimum opening - dimensions are for reference only, and are subject to change without notice.

FEMALE CONNECTOR

TFC

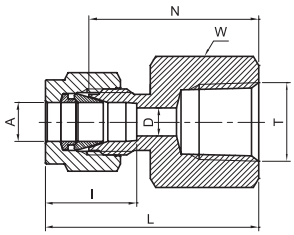

TUBE (INCH) TO FEMALE NPT THREAD													
Part Number	A Tube O.D.		T NPT	D		W Hex. flat		N		L		I	
	in	mm	in	in	mm	in	mm	in	mm	in	mm	in	mm
TFC - 1 - 1N	1/16	1.58	1/16	0.05	1.27	7/16	11.1	0.78	19.81	0.93	23.62	0.34	8.6
TFC - 1 - 2N	1/16	1.58	1/8	0.05	1.27	9/16	14.3	0.81	20.57	0.96	24.38	0.34	8.6
TFC - 2 - 2N	1/8	3.17	1/8	0.09	2.28	9/16	14.3	0.87	22.10	1.13	28.70	0.50	12.7
TFC - 2 - 4N	1/8	3.17	1/4	0.09	2.28	3/4	19.1	1.06	26.92	1.32	33.52	0.50	12.7
TFC - 3 - 2N	3/16	4.76	1/8	0.12	3.04	9/16	14.3	0.91	23.11	1.17	29.71	0.54	13.7
TFC - 4 - 2N	1/4	6.35	1/8	0.19	4.82	9/16	14.3	0.94	23.87	1.23	31.24	0.60	15.3
TFC - 4 - 4N	1/4	6.35	1/4	0.19	4.82	3/4	19.1	1.12	28.44	1.41	35.81	0.60	15.3
TFC - 4 - 6N	1/4	6.35	3/8	0.19	4.82	7/8	22.2	1.19	30.22	1.48	37.59	0.60	15.3
TFC - 4 - 8N	1/4	6.35	1/2	0.19	4.82	1-1/16	27.0	1.38	35.0	1.67	42.42	0.60	15.3
TFC - 5 - 2N	5/16	7.93	1/8	0.25	6.35	9/16	14.3	0.97	24.63	1.26	32.00	0.64	16.3
TFC - 5 - 4N	5/16	7.93	1/4	0.25	6.35	3/4	19.1	1.16	29.46	1.45	36.83	0.64	16.3
TFC - 6 - 2N	3/8	9.52	1/8	0.28	7.11	5/8	15.9	1.00	25.40	1.29	32.76	0.66	16.9
TFC - 6 - 4N	3/8	9.52	1/4	0.28	7.11	3/4	19.1	1.19	30.22	1.48	37.59	0.66	16.9
TFC - 6 - 6N	3/8	9.52	3/8	0.28	7.11	7/8	22.2	1.25	31.75	1.54	39.11	0.66	16.9
TFC - 6 - 8N	3/8	9.52	1/2	0.28	7.11	1-1/16	27.0	1.44	36.57	1.73	43.94	0.66	16.9
TFC - 6 - 12N	3/8	9.52	3/4	0.28	7.11	1-5/16	33.3	1.59	40.38	1.88	47.75	0.66	16.9
TFC - 8 - 4N	1/2	12.70	1/4	0.41	10.41	13/16	20.6	1.19	30.2	1.59	40.38	0.90	22.9
TFC - 8 - 6N	1/2	12.70	3/8	0.41	10.41	7/8	22.2	1.25	31.75	1.65	41.91	0.90	22.9
TFC - 8 - 8N	1/2	12.70	1/2	0.41	10.41	1-1/16	27.0	1.44	36.57	1.84	46.73	0.90	22.9
TFC - 8 - 12N	1/2	12.70	3/4	0.41	10.41	1-5/16	33.3	1.50	38.10	1.90	48.26	0.90	22.9
TFC - 10 - 6N	5/8	15.87	3/8	0.50	12.70	1-5/16	23.8	1.25	31.75	1.65	41.91	0.96	24.4
TFC - 10 - 8N	5/8	15.87	1/2	0.50	12.70	1-1/16	27.0	1.44	36.57	1.84	46.73	0.96	24.4
TFC - 10 - 12N	5/8	15.87	3/4	0.5	12.7	1-5/16	33.3	1.50	38.1	1.90	48.26	0.96	24.4
TFC - 12 - 8N	3/4	19.05	1/2	0.62	15.74	1-1/16	27.0	1.44	36.57	1.84	46.73	0.96	24.5
TFC - 12 - 12N	3/4	19.05	3/4	0.62	15.74	1-5/16	33.3	1.50	38.10	1.90	48.26	0.96	24.5
TFC - 14 - 12N	7/8	22.22	3/4	0.72	18.28	1-5/16	33.3	1.56	39.62	1.96	49.78	1.02	25.9
TFC - 16 - 12N	1	25.40	3/4	0.88	22.35	1-3/8	34.9	1.62	41.14	2.10	53.34	1.23	31.2
TFC - 16 - 16N	1	25.4	1	0.88	22.35	1-5/8	41.3	1.97	50.03	2.45	62.23	1.23	31.2
TFC – 20 - 20N	1-1/4	31.75	1-1/4	1.09	27.7	2-1/8	54	2.07	52.59	2.94	74.68	1.62	41.2
TFC – 24 - 24N	1-1/2	38.1	1-1/2	1.34	34.0	2-3/8	60.3	2.21	56.13	3.28	83.31	1.97	50.0
TFC – 32 - 32N	2	50.8	2	1.81	45.97	2-7/8	73	2.53	64.26	4.0	101.6	2.66	67.6

"D" - Dimension is minimum opening - dimensions are for reference only, and are subject to change without notice.

FEMALE CONNECTOR

TFC

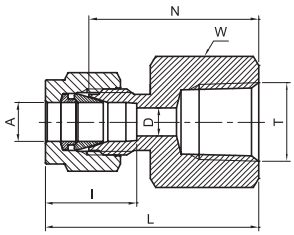

TUBE (METRIC) TO FEMALE ISO TAPERED THREAD							
Part Number	A Tube O.D.	T ISO	D	W Hex. flat	N	L	I
	mm	in	mm	mm	mm	mm	mm
TFC - 3M - 2P	3	Rc 1/8	2.4	14	22.1	28.7	12.9
TFC - 6M - 2P	6	Rc 1/8	4.8	14	23.9	31.3	15.3
TFC - 6M - 4P	6	Rc 1/4	4.8	19	28.4	35.8	15.3
TFC - 6M - 6P	6	Rc 3/8	4.8	22	30.2	37.6	15.3
TFC - 6M - 8P	6	Rc 1/2	4.8	27	35.1	42.5	15.3
TFC - 8M - 2P	8	Rc 1/8	6.4	15	24.6	32.1	16.2
TFC - 8M - 4P	8	Rc 1/4	6.4	19	29.5	37.0	16.2
TFC - 8M - 6P	8	Rc 3/8	6.4	22	31.0	38.5	16.2
TFC - 8M - 8P	8	Rc 1/2	6.4	27	35.8	43.3	16.2
TFC - 10M - 2P	10	Rc 1/8	7.9	18	25.4	33.0	17.2
TFC - 10M - 4P	10	Rc 1/4	7.9	19	30.2	37.8	17.2
TFC - 10M - 6P	10	Rc 3/8	7.9	22	31.8	39.4	17.2
TFC - 10M - 8P	10	Rc 1/2	7.9	27	36.6	44.2	17.2
TFC - 12M - 2P	12	Rc 1/8	9.5	22	25.4	35.5	22.8
TFC - 12M - 4P	12	Rc 1/4	9.5	22	30.2	40.3	22.8
TFC - 12M - 6P	12	Rc 3/8	9.5	22	31.8	41.9	22.8
TFC - 12M - 8P	12	Rc 1/2	9.5	27	36.6	46.7	22.8
TFC - 12M - 12P	12	Rc 3/4	9.5	35	38.9	49.0	22.8
TFC - 15M - 6P	15	Rc 3/8	11.9	24	31.8	41.9	24.4
TFC - 15M - 8P	15	Rc 1/2	11.9	27	36.6	46.7	24.4
TFC - 20M - 8P	20	Rc 1/2	15.9	30	37.8	47.9	24.4
TFC - 20M - 12P	20	Rc 3/4	15.9	35	39.6	49.7	26.0
TFC - 22M - 12P	22	Rc 3/4	18.3	35	39.6	49.7	26.0
TFC - 22M - 16P	22	Rc 1	18.3	41	47.8	57.9	26.0
TFC - 25M - 12P	25	Rc 3/4	21.8	35	41.1	53.4	31.3
TFC - 25M - 16P	25	Rc 1	21.8	41	50.0	62.3	31.3

Reference Specififcations :

DIN - ISO 2999 •55° Thread angle
BS - 21 •Truncation of root and crest are round
JIS - B0203 •Taper angle 1° 47'

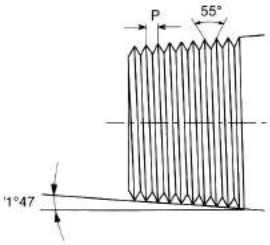

"D" - Dimension is minimum opening - dimensions are for reference only, and are subject to change without notice.

FEMALE CONNECTOR

TFC

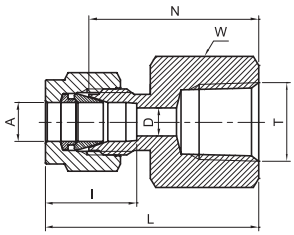

TUBE (INCH) TO FEMALE ISO TAPERED THREAD													
Part Number	A Tube O.D.		T ISO	D		W Hex. flat		N		L		I	
	in	mm	in	in	mm	in	mm	in	mm	in	mm	in	mm
TFC - 1 - 1P	1/16	1.58	Rc 1/16	0.05	1.27	7/16	11.1	0.78	19.81	0.93	23.62	0.34	8.6
TFC - 1 - 2P	1/16	1.58	Rc 1/8	0.05	1.27	9/16	14.3	0.81	20.57	0.96	24.38	0.34	8.6
TFC - 2 - 2P	1/8	3.17	Rc 1/8	0.09	2.28	9/16	14.3	0.87	22.10	1.13	28.70	0.50	12.7
TFC - 2 - 4P	1/8	3.17	Rc 1/4	0.09	2.28	3/4	19.1	1.06	26.92	1.32	33.52	0.50	12.7
TFC - 3 - 2P	3/16	4.76	Rc 1/8	0.12	3.04	9/16	14.3	0.91	23.11	1.17	29.71	0.54	13.7
TFC - 4 - 2P	1/4	6.35	Rc 1/8	0.19	4.82	9/16	14.3	0.94	23.87	1.23	31.24	0.60	15.3
TFC - 4 - 4P	1/4	6.35	Rc 1/4	0.19	4.82	3/4	19.1	1.12	28.44	1.41	35.81	0.60	15.3
TFC - 4 - 6P	1/4	6.35	Rc 3/8	0.19	4.82	7/8	22.2	1.19	30.22	1.48	37.59	0.60	15.3
TFC - 4 - 8P	1/4	6.35	Rc 1/2	0.19	4.82	1-1/16	27.0	1.38	35.0	1.67	42.42	0.60	15.3
TFC - 5 - 2P	5/16	7.93	Rc 1/8	0.25	6.35	9/16	14.3	0.97	24.63	1.26	32.00	0.64	16.3
TFC - 5 - 4P	5/16	7.93	Rc 1/4	0.25	6.35	3/4	19.1	1.16	29.46	1.45	36.83	0.64	16.3
TFC - 6 - 2P	3/8	9.52	Rc 1/8	0.28	7.11	5/8	15.9	1.00	25.40	1.29	32.76	0.66	16.9
TFC - 6 - 4P	3/8	9.52	Rc 1/4	0.28	7.11	3/4	19.1	1.19	30.22	1.48	37.59	0.66	16.9
TFC - 6 - 6P	3/8	9.52	Rc 3/8	0.28	7.11	7/8	22.2	1.25	31.75	1.54	39.11	0.66	16.9
TFC - 6 - 8P	3/8	9.52	Rc 1/2	0.28	7.11	1-1/16	27.0	1.44	36.57	1.73	43.94	0.66	16.9
TFC - 6 - 12P	3/8	9.52	Rc 3/4	0.28	7.11	1-5/16	33.3	1.59	40.38	1.88	47.75	0.66	16.9
TFC - 8 - 4P	1/2	12.70	Rc 1/4	0.41	10.41	13/16	20.6	1.19	30.2	1.59	40.38	0.90	22.9
TFC - 8 - 6P	1/2	12.70	Rc 3/8	0.41	10.41	7/8	22.2	1.25	31.75	1.65	41.91	0.90	22.9
TFC - 8 - 8P	1/2	12.70	Rc 1/2	0.41	10.41	1-1/16	27.0	1.44	36.57	1.84	46.73	0.90	22.9
TFC - 8 - 12P	1/2	12.70	Rc 3/4	0.41	10.41	1-5/16	33.3	1.50	38.10	1.90	48.26	0.90	22.9
TFC - 10 - 6P	5/8	15.87	Rc 3/8	0.50	12.70	15/16	23.8	1.25	31.75	1.65	41.91	0.96	24.4
TFC - 10 - 8P	5/8	15.87	Rc 1/2	0.50	12.70	1-1/16	27.0	1.44	36.57	1.84	46.73	0.96	24.4
TFC - 10 - 12P	5/8	15.87	Rc 3/4	0.5	12.7	1-5/16	33.3	1.50	38.1	1.90	48.26	0.96	24.4
TFC - 12 - 8P	3/4	19.05	Rc 1/2	0.62	15.74	1-1/16	27.0	1.44	36.57	1.84	46.73	0.96	24.5
TFC - 12 - 12P	3/4	19.05	Rc 3/4	0.62	15.74	1-5/16	33.3	1.50	38.10	1.90	48.26	0.96	24.5
TFC - 14 - 12P	7/8	22.22	Rc 3/4	0.72	18.28	1-5/16	33.3	1.56	39.62	1.96	49.78	1.02	25.9
TFC - 16 - 12P	1	25.40	Rc 3/4	0.88	22.35	1-3/8	34.9	1.62	41.14	2.10	53.34	1.23	31.2
TFC - 16 - 16P	1	25.40	Rc 1	0.88	22.35	1-5/8	41.3	1.97	50.03	2.45	62.23	1.23	31.2
TFC - 20 - 20P	1-1/4	31.75	1-1/4	1.09	27.7	2-1/8	54.0	2.07	52.59	2.94	74.68	1.62	41.2
TFC - 24 - 24P	1-1/2	38.1	1-1/2	1.34	34.0	2-3/8	60.3	2.21	56.13	3.28	83.31	1.97	50.0
TFC - 32 - 32P	2	50.8	2	1.81	45.97	2-7/8	73.0	2.53	64.26	4.0	101.6	2.66	67.6

"D" - Dimension is minimum opening - dimensions are for reference only, and are subject to change without notice.

FEMALE CONNECTOR

TFC

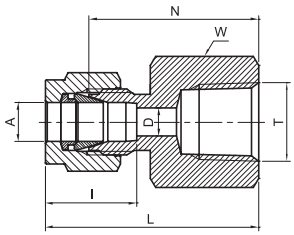

TUBE(METRIC) TO FEMALE ISO PARALLEL THREAD							
Part Number	A Tube O.D.	T ISO	D	W Hex. Flat	N	L	I
	mm	mm	mm	mm	mm	mm	mm
TFC-6M-4RP	6	G 1/4	4.8	19	32.0	39.4	15.3
TFC-6M-6RP	6	G 3/8	4.8	22	33.8	41.2	15.3
TFC-8M-6RP	8	G 3/8	6.4	22	34.6	42.1	16.2
TFC-8M-8RP	8	G 1/2	6.4	27	30.6	46.9	16.2
TFC-10M-8RP	10	G 1/2	7.9	27	40.2	47.8	17.2
TFC-12M-8RP	12	G 1/2	9.5	27	40.2	50.3	22.8
TFC-12M-12RP	12	G 3/4	9.5	35	40.5	50.6	22.8

TUBE(INCH) TO FEMALE ISO PARALLEL THREAD													
	A Tube O.D.		T ISO	D		W Hex. Flat		N		L		I	
	in	mm	in	in	mm	in	mm	in	mm	in	mm	in	mm
TFC-2-2RP	1/8	3.17	G 1/8	0.09	2.28	9/16	14.3	0.96	24.3	1.22	30.90	0.5	12.7
TFC-2-4RP	1/8	3.17	G 1/4	0.09	2.28	3/4	19.1	1.20	30.52	1..46	37.12	0.5	12.7
TFC-4-4RP	1/4	6.35	G 1/4	0.19	4.82	3/4	19.1	1.26	32.04	1.55	39.41	0.6	15.3
TFC-4-6RP	1/4	6.35	G 3/8	0.19	4.82	7/8	22.2	1.33	33.82	1.62	41.19	0.6	15.3
TFC-6-6RP	3/8	9.52	G 3/8	0.28	7.11	7/8	22.2	1.39	35.35	1.68	42.71	0.66	16.9
TFC-6-8RP	3/8	9.52	G 1/2	0.28	7.11	1-1/16	27.0	1.58	40.17	1.68	42.71	0.66	16.9
TFC-8-8RP	1/2	12.7	G 1/2	0.41	10.41	1-1/16	27.0	1.58	40.17	1.98	50.33	0.90	22.9
TFC-8-12RP	1/2	12.7	G 3/4	0.41	10.41	1-5/16	33.3	1.64	41.7	2.04	51.86	0.9	22.9
TFC-12-12RP	3/4	19.05	G 3/4	0.62	15.74	1-5/16	33.3	1.64	41.7	2.04	51.86	0.96	24.5
TFC-16-16RP	1	25.4	G 1	0.88	22.35	1-3/8	41.3	2.03	51.63	2.51	63.83	1.23	31.2

"D" - Dimension is minimum opening - dimensions are for reference only, and are subject to change without notice.

FEMALE CONNECTOR (GAUGE CONNECTOR)

TFC

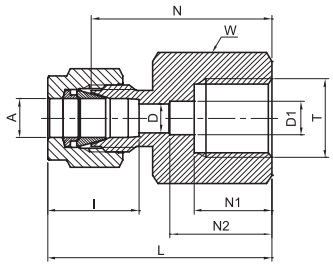

TUBE (METRIC) TO FEMALE ISO PARALLEL THREAD												
Part Number	A Tube O.D.	T ISO	D	D1		W Hex. flat	N	N1	N2		L	I
	mm	in	mm	mm	mm	mm	mm	mm	mm	mm	mm	mm
TFC - 3M - 4RG	3	G 1/4	2.4	0.22	5.5	19	28.7	13	0.67	17.0	35.3	12.9
TFC - 6M - 4RG	6	G 1/4	4.8	0.22	5.5	19	30.2	13	0.67	17.0	37.6	15.3
TFC - 6M - 6RG	6	G 3/8	4.8	0.26	6.5	24	30.2	16	0.80	20.3	37.6	15.3
TFC - 6M - 8RG	6	G 1/2	4.8	0.28	7.0	27	36.3	19	0.98	24.9	43.0	15.3
TFC - 8M - 4RG	8	G 1/4	5.5	-		19	31.0	13	-		38.5	16.2
TFC - 8M - 6RG	8	G 3/8	6.5	-		24	28.7	16	-		36.2	16.2
TFC - 8M - 8RG	8	G 1/2	7.0	-		27	33.0	19	-		40.5	16.2
TFC - 10M - 4RG	10	G 1/4	5.5	-		19	31.8	13	-		39.4	17.2
TFC - 10M - 6RG	10	G 3/8	6.5	-		24	31.2	16	-		38.8	17.2
TFC - 10M - 8RG	10	G 1/2	7.0	-		27	34.5	19	-		41.4	17.2
TFC - 12M - 4RG	12	G 1/4	5.5	-		22	31.8	13	-		41.9	22.8
TFC - 12M - 6RG	12	G 3/8	6.5	-		24	34.3	16	-		44.4	22.8
TFC - 12M - 8RG	12	G 1/2	7.0	-		27	38.1	19	-		48.2	22.8
TFC - 20M - 8RG	20	G 1/2	7.0	-		30	44.2	19	-		54.3	26.0
TFC - 22M - 8RG	22	G 1/2	7.0	-		30	44.2	19	-		54.3	26.0

TUBE (INCH) TO FEMALE ISO PARALLEL THREAD																				
Part Number	A Tube O.D.		T ISO	D		D1		W Hex. flat		N		N1		N2		L		I	
	in	mm	in	in	mm	in	mm	in	mm	in	mm	in	mm	in	mm	in	mm	in	mm
TFC - 4 - 4RG	1/4	6.35	G 1/4	0.19	4.82	0.22	5.5	3/4	19.1	1.19	30.22	0.51	13	0.67	17.0	1.48	37.59	0.60	15.3
TFC - 4 - 6RG	1/4	6.35	G 3/8	0.19	4.82	0.26	6.5	15/16	23.8	1.19	30.22	0.63	16	0.80	20.3	1.48	37.59	0.60	15.3
TFC - 4 - 8RG	1/4	6.35	G 1/2	0.19	4.82	0.28	7.0	1-1/16	27.0	1.18	30.07	0.75	19	0.98	24.9	1.71	43.43	0.60	15.3
TFC - 5 - 4RG	5/16	7.93	G 1/4	0.22	5.5	-		3/4	19.1	1.22	30.98	0.51	13	-		1.51	38.35	0.64	16.3
TFC - 5 - 8RG	5/16	7.93	G 1/2	0.28	7.0	-		1-1/16	27.0	1.30	33.02	0.75	19	-		1.59	40.38	0.64	16.3
TFC - 6 - 4RG	3/8	9.52	G 1/4	0.22	5.5	-		3/4	19.1	1.25	31.75	0.51	13	-		1.54	39.12	0.66	16.9
TFC - 6 - 6RG	3/8	9.52	G 3/8	0.26	6.5	-		15/16	23.8	1.23	31.24	0.63	16	-		1.52	38.61	0.66	16.9
TFC - 6 - 8RG	3/8	9.52	G 1/2	0.28	7.0	-		1-1/16	27.0	1.36	34.54	0.75	19	-		1.65	41.91	0.66	16.9
TFC - 8 - 4RG	1/2	12.7	G 1/4	0.22	5.5	-		7/8	22.2	1.25	31.8	0.51	13	-		1.65	41.95	0.9	22.9
TFC - 8 - 6RG	1/2	12.7	G 3/8	0.26	6.5	-		15/16	23.8	1.35	34.29	0.63	16	-		1.75	44.45	0.9	22.9
TFC - 8 - 8RG	1/2	12.7	G 1/2	0.28	7.0	-		1-1/16	27.0	1.50	38.10	0.75	19	-		1.90	48.26	0.9	22.9

"D" - Dimension is minimum opening - dimensions are for reference only, and are subject to change without notice.

REDUCER

TR

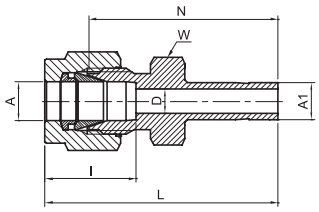

TUBE (METRIC) TO STUB (METRIC)							
Part Number	A Tube O.D.	A1 Tube O.D.	D	W Hex. flat	N	L	i
	mm	mm	mm	mm	mm	mm	mm
TR - 2M - 3M	2	3	1.7	12	26.9	33.5	12.9
TR - 3M - 4M	3	4	2.4	12	28.4	35.0	12.9
TR - 3M - 6M	3	6	2.4	12	29.5	36.1	12.9
TR - 3M - 10M	3	10	2.4	14	31.8	38.4	12.9
TR - 4M - 6M	4	6	2.4	12	30.5	37.1	13.7
TR - 6M - 3M	6	3	1.8	14	29.5	36.9	15.3
TR - 6M - 8M	6	8	4.8	14	32.5	39.9	15.3
TR - 6M - 10M	6	10	4.8	14	33.3	40.7	15.3
TR - 6M - 12M	6	12	4.8	14	38.9	46.3	15.3
TR - 6M - 18M	6	18	4.8	22	42.2	49.6	15.3
TR - 8M - 6M	8	6	4.0	15	32.8	40.3	16.2
TR - 8M - 10M	8	10	6.4	15	34.5	42.0	16.2
TR - 8M - 12M	8	12	6.4	15	40.1	47.6	16.2
TR - 10M - 6M	10	6	4.0	18	34.8	42.4	17.2
TR - 10M - 8M	10	8	5.6	18	35.8	43.4	17.2
TR - 10M - 12M	10	12	7.9	18	42.2	49.8	17.2
TR - 10M - 15M	10	15	7.9	18	43.7	51.3	17.2
TR - 10M - 18M	10	18	7.9	22	43.7	51.3	17.2
TR - 12M - 6M	12	6	4.0	22	34.8	44.9	22.8
TR - 12M - 10M	12	10	7.7	22	36.6	46.7	22.8
TR - 12M - 16M	12	16	9.5	22	43.7	53.8	22.8
TR - 12M - 18M	12	18	9.5	22	43.7	53.8	22.8
TR - 12M - 20M	12	20	9.5	22	46.0	56.1	22.8
TR - 12M - 22M	12	22	9.5	24	46.0	46.1	22.8
TR - 12M - 25M	12	25	9.5	27	52.3	62.4	22.8
TR - 16M - 12M	16	12	9.1	24	42.9	53.0	24.4
TR - 18M - 12M	18	12	9.1	27	44.5	54.6	24.4
TR - 18M - 16M	18	16	12.7	27	46.0	56.1	24.4
TR - 18M - 20M	18	20	15.1	27	47.5	57.6	24.4
TR - 18M - 22M	18	22	15.1	27	47.5	57.6	24.4
TR - 18M - 25M	18	25	15.1	27	52.3	62.4	24.4
TR - 20M - 16M	20	16	12.7	30	47.8	57.9	26.0
TR - 20M - 18M	20	18	13.9	30	47.8	57.9	26.0
TR - 20M - 22M	20	22	15.8	30	49.3	59.4	26.0
TR - 20M - 25M	20	25	15.9	30	54.1	64.2	26.0
TR - 22M - 18M	22	18	13.9	30	47.8	57.9	26.0
TR - 22M - 20M	22	20	15.1	30	49.3	59.4	26.0
TR - 22M - 25M	22	25	18.3	30	54.1	64.2	26.0
TR - 25M - 18M	25	18	13.9	35	50.8	63.1	31.3
TR - 25M - 20M	25	20	15.1	35	52.3	64.6	31.3

"D" - Dimension is minimum opening - dimensions are for reference only, and are subject to change without notice.

REDUCER

TR

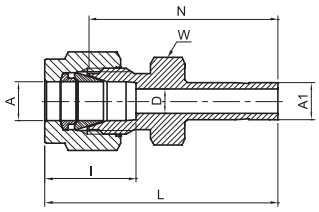

TUBE (METRIC) TO STUB (INCH)							
Part Number	A Tube O.D.	A1 Tube O.D.	D	W Hex. flat	N	L	i
	mm	in	mm	mm	mm	mm	mm
TR - 2M - 2	2	1/8	1.7	12	26.9	33.5	12.9
TR - 3M - 2	3	1/8	2.0	12	26.9	33.5	12.9
TR - 3M - 4	3	1/4	2.4	12	29.5	36.1	12.9
TR - 4M - 4	4	1/4	2.4	12	30.5	37.1	13.7
TR - 6M - 2	6	1/8	2.2	14	29.5	36.9	15.3
TR - 6M - 5	6	5/16	4.8	14	32.5	39.9	15.3
TR - 6M - 6	6	3/8	4.8	14	33.3	40.7	15.3
TR - 6M - 8	6	1/2	4.8	14	38.9	46.3	15.3
TR - 8M - 6	8	3/8	6.4	15	34.5	42.0	16.2
TR - 8M - 8	8	1/2	6.4	15	40.1	47.6	16.2
TR - 10M - 6	10	3/8	7.1	18	36.6	44.2	17.2
TR - 10M - 8	10	1/2	7.9	18	42.2	49.8	17.2
TR - 12M - 8	12	1/2	9.5	22	42.2	52.3	22.8
TR - 12M - 12	12	3/4	9.5	22	43.7	53.8	22.8
TR - 18M - 12	18	3/4	15.1	27	46.0	56.1	24.4
TR - 18M - 16	18	1	15.1	27	52.3	62.4	24.4
TR - 25M - 16	25	1	20.2	35	57.2	69.4	31.3

“D” - Dimension is minimum opening - dimensions are for reference only, and are subject to change without notice.

REDUCER

TR

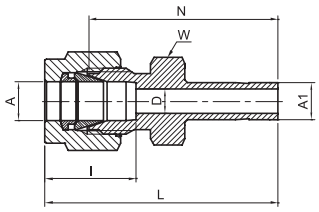

TUBE (INCH) TO STUB (INCH)														
Part Number	A Tube O.D.		A1 Tube O.D.		D		W Hex. flat		N		L		I	
	in	mm	in	mm	in	mm	in	mm	in	mm	in	mm	in	mm
TR - 1 - 2	1/16	1.58	1/8	3.17	0.05	1.27	5/16	7.9	1.00	25.40	1.15	29.21	0.34	8.6
TR - 1 - 4	1/16	1.58	1/4	6.35	0.05	1.27	5/16	7.9	1.09	27.68	1.24	31.50	0.34	8.6
TR - 2 - 1	1/8	3.17	1/16	1.58	0.03	0.76	7/16	11.1	0.88	22.35	1.14	28.96	0.50	12.7
TR - 2 - 3	1/8	3.17	3/16	4.76	0.09	2.28	7/16	11.1	1.09	27.68	1.35	34.29	0.50	12.7
TR - 2 - 4	1/8	3.17	1/4	6.35	0.09	2.28	7/16	11.1	1.16	29.46	1.42	36.06	0.50	12.7
TR - 2 - 6	1/8	3.17	3/8	9.52	0.09	2.28	7/16	11.1	1.22	30.98	1.48	37.59	0.50	12.7
TR - 2 - 8	1/8	3.17	1/2	12.70	0.09	2.28	9/16	14.3	1.48	37.59	1.74	44.20	0.50	12.7
TR - 3 - 2	3/16	4.76	1/8	3.17	0.08	2.03	7/16	11.1	1.11	28.19	1.37	34.80	0.54	13.7
TR - 3 - 4	3/16	4.76	1/4	6.35	0.12	3.04	7/16	11.1	1.20	30.48	1.46	37.08	0.60	13.7
TR - 4 - 2	1/4	6.35	1/8	3.17	0.08	2.03	1/2	12.7	1.16	29.46	1.45	36.83	0.60	15.3
TR - 4 - 3	1/4	6.35	3/16	4.76	0.12	3.04	1/2	12.7	1.19	30.22	1.48	37.59	0.60	15.3
TR - 4 - 4	1/4	6.35	1/4	6.35	0.17	4.20	1/2	12.7	1.25	31.75	1.54	39.11	0.60	15.3
TR - 4 - 5	1/4	6.35	5/16	7.93	0.19	4.82	1/2	12.7	1.28	32.51	1.57	39.87	0.60	15.3
TR - 4 - 6	1/4	6.35	3/8	9.52	0.19	4.82	1/2	12.7	1.31	33.27	1.60	40.64	0.60	15.3
TR - 4 - 8	1/4	6.35	1/2	12.70	0.19	4.82	9/16	14.3	1.53	38.86	1.82	46.22	0.60	15.3
TR - 4 - 10	1/4	6.35	5/8	7.93	0.19	4.82	11/16	17.5	1.60	40.64	1.89	48.00	0.60	15.3
TR - 4 - 12	1/4	6.35	3/4	19.05	0.19	4.82	13/16	20.6	1.59	40.39	1.88	47.75	0.60	15.3
TR - 5 - 6	5/16	7.93	3/8	9.52	0.25	6.35	9/16	14.3	1.36	34.54	1.65	41.91	0.64	16.3
TR - 5 - 8	5/16	7.93	1/2	12.70	0.25	6.35	9/16	14.3	1.58	40.13	1.87	47.49	0.64	16.3
TR - 6 - 4	3/8	9.52	1/4	6.35	0.17	4.20	5/8	15.9	1.34	34.03	1.63	41.40	0.66	16.9
TR - 6 - 6	3/8	9.52	3/8	9.52	0.28	7.11	5/8	15.9	1.41	35.81	1.70	43.18	0.66	16.9
TR - 6 - 8	3/8	9.52	1/2	12.70	0.28	7.11	5/8	15.9	1.62	41.14	1.91	48.51	0.66	16.9
TR - 6 - 10	3/8	9.52	5/8	15.87	0.28	7.11	11/16	17.5	1.69	42.92	1.98	50.29	0.66	16.9
TR - 6 - 12	3/8	9.52	3/4	19.05	0.28	7.11	13/16	20.6	1.69	42.92	1.98	50.29	0.66	16.9
TR - 8 - 4	1/2	12.70	1/4	6.35	0.19	4.82	13/16	20.6	1.37	34.80	1.77	44.96	0.90	22.9
TR - 8 - 6	1/2	12.70	3/8	9.52	0.28	7.11	13/16	20.6	1.44	36.58	1.84	46.74	0.90	22.9
TR - 8 - 8	1/2	12.70	1/2	12.70	0.39	9.91	13/16	20.6	1.66	42.16	2.06	52.32	0.90	22.9
TR - 8 - 10	1/2	12.70	5/8	15.87	0.41	10.41	13/16	20.6	1.72	43.68	2.12	53.84	0.90	22.9
TR - 8 - 12	1/2	12.70	3/4	19.05	0.41	10.41	13/16	20.6	1.72	43.68	2.12	53.84	0.90	22.9
TR - 8 - 16	1/2	12.70	1	25.40	0.41	10.41	1-1/16	27.0	1.97	50.03	2.37	60.19	0.90	22.9
TR - 10 - 12	5/8	15.87	3/4	19.05	0.50	12.70	1-5/16	23.8	1.75	44.45	2.15	54.61	0.96	24.4
TR - 10 - 14	5/8	15.87	7/8	22.22	0.50	12.70	1-5/16	23.8	1.81	45.97	2.21	56.13	0.96	24.4
TR - 10 - 16	5/8	15.87	1	25.40	0.50	12.70	1-1/16	27.0	2.00	50.80	2.40	60.96	0.96	24.4
TR - 12 - 8	3/4	19.05	1/2	12.70	0.39	9.91	1-1/16	27.0	1.75	44.45	2.15	54.61	0.96	24.5
TR - 12 - 16	3/4	19.05	1	25.40	0.62	15.75	1-1/16	27.0	2.06	52.32	2.46	62.48	0.96	24.5
TR - 16 - 20	1	25.40	1-1/4	31.75	0.88	22.35	1-3/8	34.9	2.69	68.33	3.17	80.52	1.23	31.2
TR - 16 - 24	1	25.40	1-1/2	38.10	0.88	22.35	1-5/8	41.3	3.03	76.96	3.51	89.15	1.23	31.2
TR - 20 - 24	1-1/4	31.75	1-1/2	38.10	1.09	27.70	1-3/4	44.5	3.23	82.00	4.10	104.1	1.62	41.2

"D" - Dimension is minimum opening - dimensions are for reference only, and are subject to change without notice.

REDUCING PORT CONNECTOR

TRPC

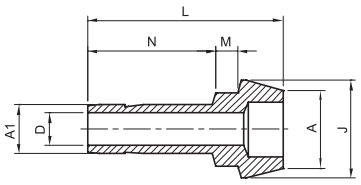

CONNECTS TWO T-LOK PORTS (METRIC)							
Part Number	A Tube O.D.	A1 Tube O.D.	D	N	L	J	M
	mm	mm	mm	mm	mm	mm	mm
TRPC - 6M - 3M	6	3	2.1	13.5	22.9	9.0	3.2
TRPC - 8M - 6M	8	6	4.0	15.7	24.7	11.0	3.1
TRPC - 10M - 6M	10	6	4.0	15.7	25.8	13.1	3.4
TRPC - 10M - 8M	10	8	5.6	16.8	26.1	13.1	3.1
TRPC - 12M - 6M	12	6	4.0	15.7	29.1	15.0	3.6
TRPC - 12M - 8M	12	8	5.6	16.8	30.1	15.0	3.4
TRPC - 12M - 10M	12	10	7.1	17.5	30.6	15.0	3.1
TRPC - 16M - 10M	16	10	8.8	23.1	37.5	19.0	3.4

CONNECTS TWO T-LOK PORTS (INCH)														
Part Number	A Tube O.D.		A1 Tube O.D.		D		N		L		J		M	
	in	mm	in	mm	in	mm	in	mm	in	mm	in	mm	in	mm
TRPC - 2 - 1	1/8	3.17	1/16	1.58	0.03	0.75	0.36	9.14	0.72	18.3	0.24	6.15	0.10	2.56
TRPC - 4 - 1	1/4	6.35	1/16	1.58	0.03	0.75	0.36	9.14	0.75	19.05	0.37	9.40	0.15	3.81
TRPC - 4 - 2	1/4	6.35	1/8	3.17	0.09	2.20	0.54	13.71	0.90	22.86	0.37	9.40	0.12	3.05
TRPC - 6 - 2	3/8	9.52	1/8	3.17	0.09	2.20	0.54	13.71	0.92	23.37	0.50	12.7	0.15	3.76
TRPC - 6 - 4	3/8	9.52	1/4	6.35	0.17	4.20	0.64	16.26	1.00	25.4	0.50	12.7	0.13	3.24
TRPC - 8 - 4	1/2	12.70	1/4	6.35	0.17	4.20	0.64	16.26	1.17	29.72	0.62	15.8	0.14	3.66
TRPC - 8 - 6	1/2	12.70	3/8	9.52	0.27	6.85	0.70	17.78	1.21	30.73	0.62	15.8	0.12	3.15
TRPC - 12 - 8	3/4	19.05	1/2	12.70	0.37	9.40	0.96	24.38	1.49	37.85	0.87	22.1	0.15	3.87

Reducing port connector TRPC

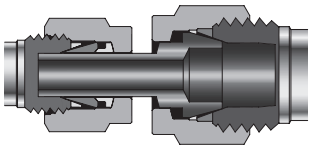

"D" - Dimension is minimum opening - dimensions are for reference only, and are subject to change without notice.

PORT CONNECTOR

TPC

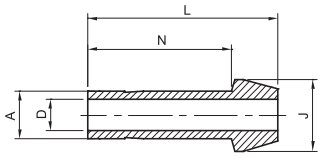

CONNECTS TWO T-LOK PORTS (METRIC)					
Part Number	A Tube O.D.	D	N	L	J
	mm	in	mm	mm	mm
TPC - 3M	3	2.1	15.7	22.2	6.0
TPC - 6M	6	4.0	18.7	25.0	9.0
TPC - 8M	8	6.0	20.0	25.9	11.0
TPC - 10M	10	7.1	20.2	27.1	13.1
TPC - 12M	12	8.8	26.0	36.2	15.0
TPC - 16M	16	12.7	27.6	37.4	19.0
TPC - 18M	18	13.9	27.6	37.4	21.1

CONNECTS TWO T-LOK PORTS (INCH)										
Part Number	A Tube O.D.		D		N		L		J	
	in	mm	in	mm	in	mm	in	mm	in	mm
TPC - 1	1/16	1.58	0.03	0.75	0.42	10.72	0.54	13.72	0.13	3.30
TPC - 2	1/8	3.17	0.09	2.20	0.62	15.75	0.88	22.35	0.24	6.15
TPC - 4	1/4	6.35	0.17	4.20	0.74	18.80	0.98	24.9	0.37	9.40
TPC - 5	5/16	7.93	0.24	6.00	0.79	20.11	1.02	25.91	0.43	11.00
TPC - 6	3/8	9.52	0.27	6.85	0.82	20.77	1.05	26.67	0.50	12.70
TPC - 8	1/2	12.70	0.37	9.40	1.04	26.52	1.43	36.32	0.62	15.80
TPC - 12	3/4	19.05	0.59	15.00	1.11	28.25	1.49	37.85	0.87	22.10
TPC - 16	1	25.40	0.80	20.30	1.40	35.68	1.94	49.28	1.12	28.50

Port connector TPC

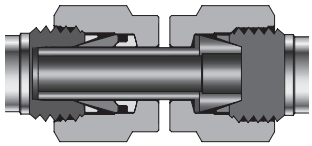

"D"- Dimension is minimum opening - dimensions are for reference only, and are subject to change without notice.
For 1/16, 1/8 and 3/16 in 2, 3 and 4mm tube fittings, tighten the port connector 1/8 turn.
For over 1 in and over 25mm tube fittings, tighten the port connector 1/4 turn.

MALE CONNECTOR

TMC-N

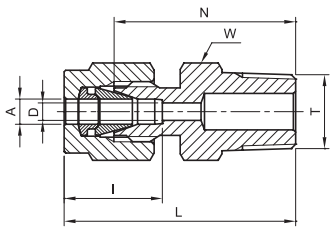

TUBE (METRIC) MALE NPT THREAD							
Part Number	A Tube O.D.	T NPT	D	W Hex. flat	N	L	I
	mm	in	mm	mm	mm	mm	mm
TMC - 3M - 2N	3	1/8	2.4	12	23.9	30.5	12.9
TMC - 3M - 4N	3	1/4	2.4	14	29.0	35.6	12.9
TMC - 4M - 2N	4	1/8	2.4	14	24.6	31.2	13.7
TMC - 4M - 4N	4	1/4	2.4	14	29.7	36.3	13.7
TMC - 6M - 2N	6	1/8	4.8	14	25.4	32.8	15.3
TMC - 6M - 4N	6	1/4	4.8	14	30.5	37.9	15.3
TMC - 6M - 6N	6	3/8	4.8	18	31.0	38.4	15.3
TMC - 6M - 8N	6	1/2	4.8	22	37.3	44.7	15.3
TMC - 8M - 2N	8	1/8	4.8	15	26.7	34.2	16.2
TMC - 8M - 4N	8	1/4	6.4	15	31.2	38.7	16.2
TMC - 8M - 6N	8	3/8	6.4	18	31.8	39.3	16.2
TMC - 8M - 8N	8	1/2	6.4	22	38.1	45.6	16.2
TMC - 10M - 2N	10	1/8	4.8	18	28.7	36.3	17.2
TMC - 10M - 4N	10	1/4	7.9	18	33.3	40.9	17.2
TMC - 10M - 6N	10	3/8	7.9	18	33.3	40.9	17.2
TMC - 10M - 8N	10	1/2	7.9	22	38.9	46.5	17.2
TMC - 10M - 12N	10	3/4	7.9	27	40.4	48.0	17.2
TMC - 12M - 2N	12	1/8	4.8	22	28.7	38.3	22.8
TMC - 12M - 4N	12	1/4	7.1	22	33.3	43.4	22.8
TMC - 12M - 6N	12	3/8	9.5	22	33.3	43.4	22.8
TMC - 12M - 8N	12	1/2	9.5	22	38.9	49.0	22.8
TMC - 12M - 12N	12	3/4	9.5	27	40.4	50.5	22.8
TMC - 14M - 4N	14	1/4	7.1	24	34.0	44.1	24.4
TMC - 14M - 6N	14	3/8	9.5	24	34.0	44.1	24.4
TMC - 14M - 8N	14	1/2	11.1	24	38.9	49.0	24.4
TMC - 15M - 8N	15	1/2	11.9	24	38.9	49.0	24.4
TMC - 16M - 6N	16	3/8	9.5	24	34.0	44.1	24.4
TMC - 16M - 8N	16	1/2	11.9	24	38.9	49.0	24.4
TMC - 16M - 12N	16	3/4	12.7	27	40.4	50.5	24.4
TMC - 18M - 8N	18	1/2	11.9	27	40.4	50.5	24.4
TMC - 18M - 12N	18	3/4	15.1	27	40.4	50.5	24.4
TMC - 20M - 8N	20	1/2	11.9	30	42.2	52.3	26.0
TMC - 20M - 12N	20	3/4	15.9	30	42.2	52.3	26.0
TMC - 22M - 12N	22	3/4	15.9	30	42.2	52.3	26.0
TMC - 22M - 16N	22	1	18.3	35	47.0	57.1	26.0
TMC - 25M - 8N	25	1/2	11.9	35	45.2	57.5	31.3
TMC - 25M - 12N	25	3/4	15.9	35	45.2	57.5	31.3
TMC - 25M - 16N	25	1	21.8	35	50	62.3	31.3
TMC - 28M - 16N	28	1	21.8	41	51.6	72.4	36.6
TMC - 28M - 20N	28	1-1/4	21.8	46	52.3	73.1	36.6
TMC - 32M - 20N	32	1-1/4	28.6	46	56.6	79.6	42.0
TMC - 32M - 24N	38	1-1/2	33.7	50	58.1	91.6	49.4

For inches, see next page

"D" - Dimension is minimum opening - dimensions are for reference only, and are subject to change without notice.

MALE CONNECTOR

TMC-N

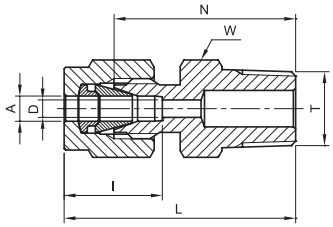

TUBE (INCH) MALE NPT THREAD													
Part Number	A Tube O.D.		T NPT	D		W Hex. flat		N		L		I	
	in	mm	in	in	mm	in	mm	in	mm	in	mm	in	mm
TMC - 1 - 1N	1/16	1.58	1/16	0.05	1.27	5/16	7.9	0.79	20	0.94	23.83	0.34	8.6
TMC - 1 - 2N	1/16	1.58	1/8	0.05	1.27	7/16	11.1	0.88	22.35	1.03	26.10	0.34	8.6
TMC - 1 - 4N	1/16	1.58	1/4	0.05	1.27	9/16	14.3	1.07	27.17	1.22	30.98	0.34	8.6
TMC - 2 - 1N	1/8	3.17	1/16	0.09	2.28	7/16	11.1	0.91	23.11	1.17	29.71	0.50	12.7
TMC - 2 - 2N	1/8	3.17	1/8	0.09	2.28	7/16	11.1	0.94	23.90	1.20	30.48	0.50	12.7
TMC - 2 - 4N	1/8	3.17	1/4	0.09	2.28	9/16	14.3	1.14	28.95	1.40	35.56	0.50	12.7
TMC - 2 - 6N	1/8	3.17	3/8	0.09	2.28	11/16	17.5	1.15	29.21	1.41	35.81	0.50	12.7
TMC - 2 - 8N	1/8	3.17	1/2	0.09	2.28	7/8	22.2	1.40	35.56	1.66	42.16	0.50	12.7
TMC - 3 - 2N	3/16	4.76	1/8	0.12	3.04	7/16	11.1	0.97	24.63	1.23	31.24	0.54	13.7
TMC - 3 - 4N	3/16	4.76	1/4	0.12	3.04	9/16	14.3	1.17	29.72	1.43	36.32	0.54	13.7
TMC - 4 - 1N	1/4	6.35	1/16	0.19	4.82	1/2	12.7	1.00	25.4	1.29	32.76	0.60	15.3
TMC - 4 - 2N	1/4	6.35	1/8	0.19	4.82	1/2	12.7	1.00	25.40	1.29	32.76	0.60	15.3
TMC - 4 - 4N	1/4	6.35	1/4	0.19	4.82	9/16	14.3	1.20	30.50	1.49	37.85	0.60	15.3
TMC - 4 - 6N	1/4	6.35	3/8	0.19	4.82	11/16	17.5	1.22	31.00	1.51	38.35	0.60	15.3
TMC - 4 - 8N	1/4	6.35	1/2	0.19	4.82	7/8	22.2	1.47	37.34	1.76	44.70	0.60	15.3
TMC - 4 - 12N	1/4	6.35	3/4	0.19	4.82	1-1/16	27	1.53	38.86	1.82	46.22	0.60	15.3
TMC - 5 - 2N	5/16	7.93	1/8	0.19	4.82	9/16	14.3	1.05	26.67	1.34	34.03	0.64	16.2
TMC - 5 - 4N	5/16	7.93	1/4	0.25	6.35	9/16	14.3	1.23	31.24	1.52	38.60	0.64	16.2
TMC - 5 - 6N	5/17	7.93	3/8	0.25	6.35	11/16	17.5	1.25	31.75	1.54	39.11	0.64	16.2
TMC - 6 - 2N	3/8	9.52	1/8	0.19	4.82	5/8	15.9	1.10	27.90	1.39	35.30	0.66	16.9
TMC - 6 - 4N	3/8	9.52	1/4	0.28	7.11	5/8	15.9	1.28	32.51	1.57	39.87	0.66	16.9
TMC - 6 - 6N	3/8	9.52	3/8	0.28	7.11	11/16	17.5	1.28	32.51	1.57	39.87	0.66	16.9
TMC - 6 - 8N	3/8	9.52	1/2	0.28	7.11	7/8	22.2	1.52	38.90	1.82	46.23	0.66	16.9
TMC - 6 - 12N	3/8	9.52	3/4	0.28	7.11	1-1/16	27.0	1.59	40.38	1.88	47.75	0.66	16.9
TMC - 8 - 2N	1/2	12.70	1/8	0.19	4.82	13/16	20.6	1.13	28.70	1.53	38.86	0.90	22.9
TMC - 8 - 4N	1/2	12.70	1/4	0.28	7.11	13/16	20.6	1.31	33.27	1.71	43.43	0.90	22.9
TMC - 8 - 6N	1/2	12.70	3/8	0.38	9.65	13/16	20.6	1.31	33.27	1.71	43.43	0.90	22.9
TMC - 8 - 8N	1/2	12.70	1/2	0.41	10.41	7/8	22.2	1.53	38.90	1.93	49.02	0.90	22.9
TMC - 8 - 12N	1/2	12.70	3/4	0.41	10.41	1-1/16	27.0	1.59	40.38	1.99	50.54	0.90	22.9
TMC - 8 - 16N	1/2	12.70	1	0.41	10.41	1-3/8	34.9	1.85	47.00	2.25	57.15	0.90	22.9
TMC - 10 - 6N	5/8	15.87	3/8	0.38	9.65	15/16	23.8	1.34	34.03	1.74	44.19	0.96	24.4
TMC - 10 - 8N	5/8	15.87	1/2	0.47	11.90	15/16	23.8	1.53	38.86	1.93	49.02	0.96	24.4
TMC - 10 - 12N	5/8	15.87	3/4	0.50	12.70	1-1/16	27.0	1.59	40.38	1.99	50.54	0.96	24.4
TMC - 12 - 8N	3/4	19.05	1/2	0.50	12.70	1-1/16	27.0	1.59	40.38	1.99	50.54	0.96	24.5
TMC - 12 - 12N	3/4	19.05	3/4	0.62	15.74	1-1/16	27.0	1.59	40.38	1.99	50.54	0.96	24.5
TMC - 12 - 16N	3/4	19.05	1	0.62	15.74	1-3/8	34.9	1.85	47.00	2.25	57.15	0.96	24.5
TMC - 14 - 12N	7/8	22.22	3/4	0.72	18.28	1-3/16	30.2	1.59	40.38	1.99	50.54	1.02	25.9
TMC - 14 - 16N	7/8	22.22	1	0.72	18.28	1-3/8	34.9	1.85	46.99	2.25	57.15	1.02	25.9
TMC - 16 - 8N	1	25.4	1/2	0.47	11.90	1-3/8	34.9	1.78	45.21	2.26	57.4	1.23	31.2
TMC - 16 - 12N	1	25.40	3/4	0.72	18.28	1-3/8	34.9	1.78	45.21	2.26	57.40	1.23	31.2
TMC - 16 - 16N	1	25.40	1	0.88	22.30	1-3/8	34.9	1.97	50.03	2.45	62.23	1.23	31.2
TMC - 20 - 16N	1-1/4	31.75	1	0.86	21.80	1-3/4	44.5	2.17	55.12	3.04	77.22	1.62	41.2
TMC - 20 - 20N	1-1/4	31.75	1-1/4	1.09	27.70	1-3/4	44.5	2.17	55.12	3.04	77.22	1.62	41.2
TMC - 24 - 24N	1-1/2	38.10	1-1/2	1.34	34.00	2-1/8	54.0	2.43	61.72	3.50	88.90	1.97	50.0
TMC - 32 - 32N	2	50.80	2	1.81	45.97	2-3/4	69.9	3.00	76.20	4.47	113.54	2.66	67.6

Reference Specifications :

- 60° thread angle
- Pitch measured in inches
- Truncation of root and crest are flat
- Taper angel 1° 47'

American Standard Pipe Thread NPT.
NPT (National Pipe Tapered) is made to specifications outlined in ANSI B1.20.1.

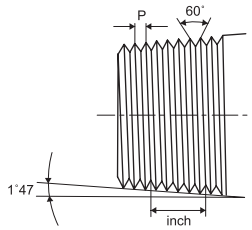

"D" - Dimension is minimum opening - dimensions are for reference only, and are subject to change without notice.

MALE CONNECTOR

TMC-P

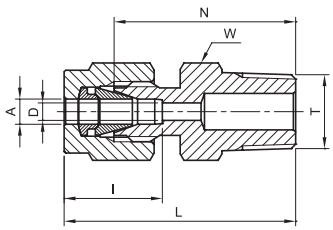

TUBE (METRIC) ISO TAPERED THREAD							
Part Number	A Tube O.D.	T ISO	D	W Hex. flat	N	L	I
	mm	in	mm	mm	mm	mm	mm
TMC - 2M - 2P	2	R 1/8	1.7	12	23.9	30.5	12.9
TMC - 3M - 2P	3	R 1/8	2.4	12	23.9	30.5	12.9
TMC - 3M - 4P	3	R 1/4	2.4	14	29.0	35.6	12.9
TMC - 4M - 2P	4	R 1/8	2.4	12	24.6	31.2	13.7
TMC - 4M - 4P	4	R 1/4	2.4	14	29.7	36.3	13.7
TMC - 6M - 2P	6	R 1/8	4.8	14	25.4	32.8	15.3
TMC - 6M - 4P	6	R 1/4	4.8	14	30.5	37.9	15.3
TMC - 6M - 6P	6	R 3/8	4.8	18	31.0	38.4	15.3
TMC - 6M - 8P	6	R 1/2	4.8	22	37.3	44.7	15.3
TMC - 8M - 2P	8	R 1/8	4.8	15	26.7	34.2	16.2
TMC - 8M - 4P	8	R 1/4	6.4	15	31.2	38.7	16.2
TMC - 8M - 6P	8	R 3/8	6.4	18	31.8	39.2	16.2
TMC - 8M - 8P	8	R 1/2	6.4	22	38.1	45.6	16.2
TMC - 10M - 2P	10	R 1/8	4.8	18	28.7	36.3	17.2
TMC - 10M - 4P	10	R 1/4	7.9	18	33.3	40.9	17.2
TMC - 10M - 6P	10	R 3/8	7.9	18	33.3	40.9	17.2
TMC - 10M - 8P	10	R 1/2	7.9	22	38.9	46.5	17.2
TMC - 12M - 4P	12	R 1/4	7.1	22	33.3	43.4	22.8
TMC - 12M - 6P	12	R 3/8	9.5	22	33.3	43.4	22.8
TMC - 12M - 8P	12	R 1/2	9.5	22	38.9	49.0	22.8
TMC - 12M - 12P	12	R 3/4	9.5	27	40.4	50.5	22.8
TMC - 15M - 8P	15	R 1/2	11.9	24	38.9	49.0	24.4
TMC - 16M - 4P	16	R 1/4	7.1	24	34.0	44.1	24.4
TMC - 16M - 6P	16	R 3/8	9.5	24	34.0	44.1	24.4
TMC - 16M - 8P	16	R 1/2	11.9	24	38.9	49.0	24.4
TMC - 16M - 12P	16	R 3/4	12.7	27	40.4	50.5	24.4
TMC - 18M - 8P	18	R 1/2	11.9	27	40.4	50.5	24.4
TMC - 18M - 12P	18	R 3/4	15.1	27	40.4	50.5	24.4
TMC - 20M - 8P	20	R 1/2	11.9	30	42.2	52.3	26.0
TMC - 20M - 12P	20	R 3/4	15.9	30	42.2	52.3	26.0
TMC - 22M - 12P	22	R 3/4	15.9	30	42.2	52.3	26.0
TMC - 22M - 16P	22	R 1	18.3	35	47.0	57.1	26.0
TMC - 25M - 12P	25	R 3/4	15.9	35	45.2	57.5	31.3
TMC - 25M - 16P	25	R 1	21.8	35	50.0	62.3	31.3
TMC - 28M - 16P	28	R 1	21.8	41	51.6	72.4	36.6
TMC - 28M - 20P	28	R 1-1/4	21.8	46	52.3	73.1	36.6
TMC - 32M - 20P	32	R 1-1/4	28.6	46	56.6	79.6	42.0
TMC - 32M - 24P	38	R 1-1/2	33.7	50	58.1	91.6	49.4

For inches, see next page

Reference Specififcations :

DIN - ISO 2999 •55° Thread angle

BS - 21 •Truncation of root and crest are round

JIS - B0203 •Taper angle 1° 47'

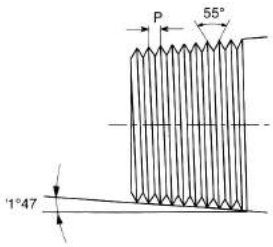

"D" - Dimension is minimum opening - dimensions are for reference only, and are subject to change without notice.

MALE CONNECTOR

TMC-P

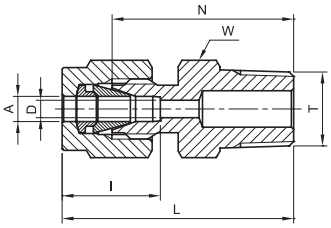

TUBE (INCH) ISO TAPERED THREAD													
Part Number	A Tube O.D.		T ISO	D		W Hex. flat		N		L		I	
	in	mm	in	in	mm	in	mm	in	mm	in	mm	in	mm
TMC - 2 - 2P	1/8	3.17	R 1/8	0.09	2.28	7/16	11.1	0.94	23.90	1.20	30.48	0.50	12.7
TMC - 2 - 4P	1/8	3.17	R 1/4	0.09	2.28	9/16	14.3	1.14	28.95	1.40	35.56	0.50	12.7
TMC - 4 - 2P	1/4	6.35	R 1/8	0.19	4.82	1/2	12.7	1.00	25.40	1.29	32.76	0.60	15.3
TMC - 4 - 4P	1/4	6.35	R 1/4	0.19	4.82	9/16	14.3	1.20	30.50	1.49	37.85	0.60	15.3
TMC - 4 - 6P	1/4	6.35	R 3/8	0.19	4.82	11/16	17.5	1.21	30.78	1.51	38.35	0.60	15.3
TMC - 4 - 8P	1/4	6.35	R 1/2	0.19	4.82	7/8	22.2	1.47	37.34	1.76	44.70	0.60	15.3
TMC - 5 - 2P	5/16	7.93	R 1/8	0.19	4.82	9/16	14.3	1.05	26.67	1.34	34.03	0.64	16.2
TMC - 5 - 4P	5/16	7.93	R 1/4	0.25	6.35	9/16	14.3	1.23	31.24	1.52	38.60	0.64	16.2
TMC - 6 - 2P	3/8	9.52	R 1/8	0.19	4.82	5/8	15.9	1.10	27.90	1.39	35.30	0.66	16.9
TMC - 6 - 4P	3/8	9.52	R 1/4	0.28	7.11	5/8	15.9	1.28	32.51	1.57	39.87	0.66	16.9
TMC - 6 - 6P	3/8	9.52	R 3/8	0.28	7.11	11/16	17.5	1.28	32.51	1.57	39.87	0.66	16.9
TMC - 6 - 8P	3/8	9.52	R 1/2	0.28	7.11	7/8	22.2	1.53	38.90	1.82	46.23	0.66	16.9
TMC - 8 - 4P	1/2	12.70	R 1/4	0.28	7.11	13/16	20.6	1.31	33.27	1.71	43.43	0.90	22.9
TMC - 8 - 6P	1/2	12.70	R 3/8	0.38	9.65	13/16	20.6	1.31	33.27	1.71	43.43	0.90	22.9
TMC - 8 - 8P	1/2	12.70	R 1/2	0.41	10.41	7/8	22.2	1.53	38.90	1.93	49.02	0.90	22.9
TMC - 8 - 12P	1/2	12.70	R 3/4	0.41	10.41	1-1/16	27.0	1.59	40.38	1.99	50.54	0.90	22.9
TMC -12 - 12P	3/4	19.05	R 3/4	0.62	15.74	1-1/16	27.0	1.59	40.38	1.99	50.54	0.96	24.5
TMC -16 - 16P	1	25.40	R 1	0.88	22.35	1-3/8	34.9	1.97	50.03	2.45	62.23	1.23	31.2
TMC - 20 - 16P	1-1/4	31.75	R 1	0.86	21.80	1-3/4	44.5	2.17	55.12	3.04	77.22	1.62	41.2
TMC - 20 - 20P	1-1/4	31.75	R 1-1/4	1.09	27.70	1-3/4	44.5	2.17	55.12	3.04	77.22	1.62	41.2
TMC - 24 - 24P	1-1/2	38.10	R 1-1/2	1.34	34.00	2-1/8	54.0	2.43	61.72	3.50	88.90	1.97	50.0
TMC - 32 - 32P	2	50.80	R 2	1.81	45.97	2-3/4	69.9	3.00	76.20	4.47	113.54	2.66	67.6

"D" - Dimension is minimum opening - dimensions are for reference only, and are subject to change without notice.

MALE CONNECTOR

TMC-NTC THERMOCOUPLE CONNECTOR

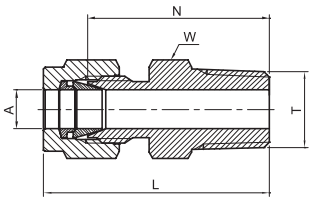

TUBE (INCH) MALE NPT THREAD									
Part Number	A Tube O.D.		T NPT	W Hex. flat		N		L	
	in	mm	in	in	mm	in	mm	in	mm
TMC - 1 - 2NTC	1/16	1.58	1/8	7/16	11.1	0.88	22.35	1.03	26.10
TMC - 2 - 2NTC	1/8	3.17	1/8	7/16	11.1	0.94	23.90	1.20	30.48
TMC - 2 - 4NTC	1/8	3.17	1/4	9/16	14.3	1.14	28.95	1.40	35.56
TMC - 3 - 2NTC	3/16	4.76	1/8	7/16	11.1	0.97	24.53	1.23	36.24
TMC - 3 - 4NTC	3/16	4.76	1/4	9/16	14.3	1.17	29.72	1.43	36.32
TMC - 4 - 2NTC	1/4	6.35	1/8	1/2	12.7	1.00	25.40	1.29	32.76
TMC - 4 - 4NTC	1/4	6.35	1/4	9/16	14.3	1.20	30.50	1.49	37.85
TMC - 4 - 6NTC	1/4	6.35	3/8	11/16	17.5	1.22	31.00	1.51	38.35
TMC - 4 - 8NTC	1/4	6.35	1/2	7/8	22.2	1.47	37.34	1.76	44.70
TMC - 5 - 4NTC	5/16	7.93	4/1	9/16	14.3	1.23	31.24	1.52	38.60
TMC - 6 - 4NTC	3/8	9.52	4/1	5/8	15.9	1.28	32.51	1.57	39.87
TMC - 6 - 6NTC	3/8	9.52	3/8	11/16	17.5	1.28	32.51	1.57	39.87
TMC - 6 - 8NTC	3/8	9.52	1/2	7/8	22.2	1.52	38.90	1.82	46.23
TMC - 6 - 12NTC	3/8	9.52	3/4	1-1/16	27.0	1.59	40.38	1.88	47.75
TMC - 8 - 8NTC	1/2	12.70	1/2	7/8	22.2	1.53	38.90	1.93	49.02
TMC - 8 - 12NTC	1/2	12.70	3/4	1-1/16	27.0	1.59	40.38	1.99	50.54
TMC - 10 - 12NTC	5/8	15.87	3/4	1-1/16	27.0	1.59	40.38	1.99	50.54
TMC - 12 - 12NTC	3/4	19.05	3/4	1-1/16	27.0	1.59	40.38	1.99	50.54
TMC - 16 - 16NTC	1	25.40	1	1-3/8	34.9	1.97	50.03	2.45	62.23

Bored-Through Fittings for Thermocouples, Dip Tubes, and Heat Exchanger Tees

MALE CONNECTOR FOR BONDED WASHER SEAL

TMC-RS

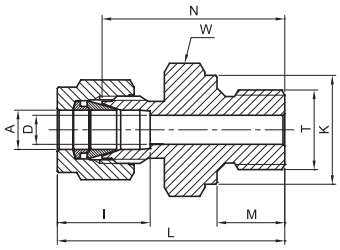

TUBE (METRIC) ISO PARALLEL THREAD									
Part Number	A Tube O.D.	T ISO	D	K	W Hex. flat	N	M	L	I
	mm	in	mm	mm	mm	mm	mm	mm	mm
TMC - 2M - 2RS	2	G 1/8	1.7	13.8	14	23.4	7.1	30.0	12.9
TMC - 3M - 2RS	3	G 1/8	2.4	13.8	14	23.4	7.1	30.0	12.9
TMC - 3M - 4RS	3	G 1/4	2.4	18.0	19	28.7	11.2	35.3	12.9
TMC - 4M - 2RS	4	G 1/8	2.4	13.8	14	24.1	7.1	30.7	13.7
TMC - 6M - 2RS	6	G 1/8	4.0	13.8	14	24.9	7.1	24.9	15.3
TMC - 6M - 4RS	6	G 1/4	4.8	18.0	19	30.2	11.2	37.6	15.3
TMC - 6M - 6RS	6	G 3/8	4.8	21.8	22	31.5	11.2	38.9	15.3
TMC - 6M - 8RS	6	G 1/2	4.8	26.0	27	37.3	14.2	44.7	15.3
TMC - 8M - 2RS	8	G 1/8	4.0	13.8	15	25.7	7.1	33.2	16.2
TMC - 8M - 4RS	8	G 1/4	6.4	13.8	19	31.0	11.2	38.5	16.2
TMC - 8M - 6RS	8	G 3/8	6.4	21.8	22	32.3	11.2	39.8	16.2
TMC - 8M - 8RS	8	G 1/2	6.4	26.0	27	38.1	14.2	45.6	16.2
TMC - 10M - 4RS	10	G 1/4	5.9	18.0	19	31.8	11.2	39.4	17.2
TMC - 10M - 6RS	10	G 3/8	7.9	21.8	22	33.0	11.2	40.6	17.2
TMC - 10M - 8RS	10	G 1/2	7.9	26.0	27	38.9	14.2	46.5	17.2
TMC - 12M - 4RS	12	G 1/4	5.9	18.0	22	32.5	11.2	42.6	22.8
TMC - 12M - 6RS	12	G 3/8	7.9	21.8	22	33.0	11.2	43.1	22.8
TMC - 12M - 8RS	12	G 1/2	9.5	26.0	27	38.9	14.2	49.0	22.8
TMC - 12M - 12RS	12	G 3/4	9.5	32.0	35	42.7	15.7	52.8	22.8
TMC - 16M - 6RS	16	G 3/8	7.9	21.8	24	33.8	11.2	43.9	24.4
TMC - 16M - 8RS	16	G 1/2	11.9	26.0	27	38.9	14.2	49.0	24.4
TMC - 18M - 8RS	18	G 1/2	11.9	26.0	27	38.9	14.2	49.0	24.4
TMC - 18M - 12RS	18	G 3/4	15.1	32.0	35	42.7	15.7	52.8	24.4
TMC - 20M - 8RS	20	G 1/2	11.9	26.0	30	40.4	14.2	50.5	26.0
TMC - 20M - 12RS	20	G 3/4	15.9	32.0	35	42.7	15.7	52.8	26.0
TMC - 22M - 12RS	22	G 3/4	15.9	32.0	35	42.7	15.7	52.8	26.0
TMC - 22M - 16RS	22	G 1	18.3	39.0	41	45.2	18.3	55.3	26.0
TMC - 25M - 12RS	25	G 3/4	15.9	32.0	35	45.2	15.7	57.5	31.3
TMC - 25M - 16RS	25	G 1	19.8	39	41	47.8	18.3	60.1	31.3
TMC - 28M - 16RS	28	G1	19.8	39	40	49.3	18.3	70.1	36.6
TMC - 28M - 20RS	28	G 1-1/4	21.8	49	50	53.1	19.8	73.9	36.6
TMC - 32M - 20RS	32	G 1-1/4	25.0	49	50	55.9	19.8	78.9	42.0
TMC - 38M - 24RS	38	G 1-1/2	31.8	54.7	55	63.2	22.1	90.8	49.4

For inches, see next page

Reference Specifications :

DIN - ISO 228/1
BS - 2779
JIS - B0202
ISO - 228/1-BSP-P

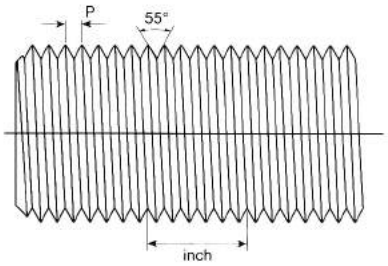

- 55° Thread angle
- Pitch measured in inches
- Root and crest truncation are round
- Diameter measured in inches

"D" - Dimension is minimum opening - dimensions are for reference only, and are subject to change without notice.

MALE CONNECTOR FOR BONDED WASHER SEAL

TMC-RS

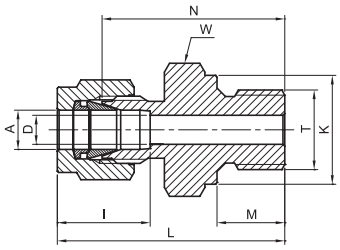

TUBE (INCH) ISO PARALLEL THREAD																	
Part Number	A Tube O.D.		T ISO	D		K		W Hex. flat		N		M		L		I	
	in	mm	in	in	mm	in	mm	in	mm	in	mm	in	mm	in	mm	in	mm
TMC - 2 - 2RS	1/8	3.17	G 1/8	0.09	2.30	0.54	13.8	9/16	14.3	0.92	23.40	0.28	7.10	1.18	30.00	0.50	12.7
TMC - 2 - 4RS	1/8	3.17	G 1/4	0.09	2.30	0.71	18.0	3/4	19.1	1.13	28.70	0.44	11.20	1.39	35.30	0.50	12.7
TMC - 2 - 6RS	1/8	3.17	G 3/8	0.09	2.30	0.86	21.8	7/8	22.2	1.17	29.72	0.44	11.20	1.46	37.00	0.50	12.7
TMC - 2 - 8RS	1/8	3.17	G 1/2	0.09	2.30	1.02	26.0	1-1/16	27.0	1.40	35.70	0.56	14.20	1.69	43.00	0.50	12.7
TMC - 3 - 2RS	3/16	4.76	G 1/8	0.12	3.10	0.54	13.8	9/16	14.3	0.95	24.10	0.28	7.10	1.20	30.70	0.54	13.7
TMC - 4 - 2RS	1/4	6.35	G 1/8	0.16	4.10	0.54	13.8	9/16	14.3	0.98	24.90	0.28	7.10	1.27	32.26	0.60	15.3
TMC - 4 - 4RS	1/4	6.35	G 1/4	0.19	4.80	0.71	18.0	3/4	19.1	1.19	30.20	0.44	11.20	1.48	37.60	0.60	15.3
TMC - 4 - 6RS	1/4	6.35	G 3/8	0.19	4.80	0.86	21.8	7/8	22.2	1.24	31.50	0.44	11.20	1.53	38.86	0.60	15.3
TMC - 4 - 8RS	1/4	6.35	G 1/2	0.19	4.80	1.02	26.0	1-1/16	27.0	1.47	37.30	0.56	14.20	1.76	44.70	0.60	15.3
TMC - 5 - 4RS	5/16	7.93	G 1/4	0.25	6.40	0.71	18.0	3/4	19.1	1.22	31.00	0.44	11.20	1.51	38.36	0.63	16.2
TMC - 5 - 6RS	5/16	7.93	G 3/8	0.25	6.40	0.86	21.8	7/8	22.2	1.27	32.30	0.44	11.20	1.56	39.66	0.63	16.2
TMC - 6 - 4RS	3/8	9.52	G 1/4	0.23	5.80	0.71	18.0	3/4	19.1	1.25	31.75	0.44	11.20	1.54	39.11	0.66	16.9
TMC - 6 - 6RS	3/8	9.52	G 3/8	0.28	7.10	0.86	21.8	7/8	22.2	1.30	33.00	0.44	11.20	1.59	40.40	0.66	16.9
TMC - 6 - 8RS	3/8	9.52	G 1/2	0.28	7.10	1.02	26.0	1-1/16	27.0	1.53	38.86	0.56	14.20	1.82	46.22	0.66	16.9
TMC - 8 - 4RS	1/2	12.70	G 1/4	0.23	5.80	0.71	18.0	1-3/16	20.6	1.28	32.50	0.44	11.20	1.68	42.67	0.90	22.9
TMC - 8 - 6RS	1/2	12.70	G 3/8	0.31	7.90	0.86	21.8	7/8	22.2	1.30	33.00	0.44	11.20	1.70	43.18	0.90	22.9
TMC - 8 - 8RS	1/2	12.70	G 1/2	0.41	10.40	1.02	26.0	1-1/16	27.0	1.47	37.40	0.56	14.20	1.93	49.00	0.90	22.9
TMC - 8 - 12RS	1/2	12.70	G 3/4	0.41	10.40	1.26	32.0	1-5/16	33.3	1.68	42.70	0.62	15.70	2.08	52.86	0.90	22.9
TMC - 10 - 6RS	5/8	15.87	G 3/8	0.31	7.90	0.86	21.8	-	24.0	1.33	33.80	0.44	11.20	1.73	43.96	0.96	24.4
TMC - 10 - 8RS	5/8	15.87	G 1/2	0.47	11.90	1.02	26.0	1-1/16	27.0	1.53	38.90	0.56	14.20	1.93	49.10	0.96	24.4
TMC - 12 - 8RS	3/4	19.05	G 1/2	0.47	11.90	1.02	26.0	1-1/16	27.0	1.53	38.86	0.56	14.20	1.93	49.00	0.96	24.5
TMC - 12 - 12RS	3/4	19.05	G 3/4	0.62	15.80	1.26	32.0	1-5/16	33.3	1.68	42.70	0.62	15.70	2.08	52.83	0.96	24.5
TMC - 16 - 8RS	1	25.40	G 1/2	0.47	11.90	1.02	26.0	1-3/8	34.9	1.72	43.70	0.56	14.20	2.20	55.80	1.23	31.2
TMC - 16 - 12RS	1	25.40	G 3/4	0.62	15.90	1.26	32.0	1-3/8	34.9	1.78	45.20	0.62	15.70	2.65	67.30	1.23	31.2
TMC - 16 - 16RS	1	25.40	G 1	0.78	19.80	1.54	39.0	1-5/8	41.3	1.88	47.80	0.72	18.30	2.36	59.94	1.23	31.2

"D" - Dimension is minimum opening - dimensions are for reference only, and are subject to change without notice.

MALE CONNECTOR FOR METAL GASKET SEAL

TMC-RP

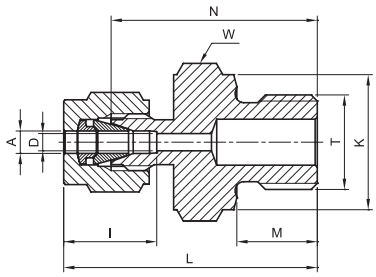

TUBE (METRIC) ISO PARALLEL THREAD									
Part Number	A Tube O.D.	T ISO	D	K	W Hex. flat	N	M	L	I
	mm	in	mm	mm	mm	mm	mm	mm	mm
TMC - 3M - 2RP	3	G 1/8	2.4	13.8	14	23.4	7.1	30.0	12.9
TMC - 3M - 4RP	3	G 1/4	2.4	18.0	19	28.7	11.2	35.3	12.9
TMC - 4M - 2RP	4	G 1/8	2.4	13.8	14	24.1	7.1	30.7	13.7
TMC - 6M - 2RP	6	G 1/8	4.0	13.8	14	24.9	7.1	32.3	15.3
TMC - 6M - 4RP	6	G 1/4	4.8	18.0	19	30.2	11.2	37.6	15.3
TMC - 6M - 6RP	6	G 3/8	4.8	21.8	22	31.5	11.2	38.9	15.3
TMC - 6M - 8RP	6	G 1/2	4.8	26.0	27	37.3	14.2	44.7	15.3
TMC - 8M - 2RP	8	G 1/8	4.0	13.8	15	25.7	7.1	33.2	16.2
TMC - 8M - 4RP	8	G 1/4	6.4	18.0	19	31.0	11.2	38.5	16.2
TMC - 8M - 6RP	8	G 3/8	6.4	21.8	22	32.3	11.2	39.8	16.2
TMC - 8M - 8RP	8	G 1/2	6.4	26.0	27	38.1	14.2	45.6	16.2
TMC - 10M - 4RP	10	G 1/4	5.9	18.0	19	31.8	11.2	39.4	17.2
TMC - 10M - 6RP	10	G 3/8	7.9	21.8	22	33.0	11.2	40.6	17.2
TMC - 10M - 8RP	10	G 1/2	7.9	26.0	27	38.9	14.2	46.5	19.5
TMC - 12M - 4RP	12	G 1/4	5.9	18.0	22	32.5	11.2	42.6	17.2
TMC - 12M - 6RP	12	G 3/8	7.9	21.8	22	33.0	11.2	43.1	22.8
TMC - 12M - 8RP	12	G 1/2	9.5	26.0	27	38.9	14.2	49.0	22.8
TMC - 12M - 12RP	12	G 3/4	9.5	32.0	35	42.7	15.7	52.8	22.8
TMC - 15M - 8RP	15	G 1/2	11.9	26.0	27	38.9	14.2	49.0	22.8
TMC - 16M - 6RP	16	G 3/8	7.9	21.8	24	33.8	11.2	43.9	22.4
TMC - 16M - 8RP	16	G 1/2	11.9	26.0	27	38.9	14.2	49.0	22.4
TMC - 18M - 8RP	18	G 1/2	11.9	26.0	27	38.9	14.2	49.0	22.4
TMC - 18M - 12RP	18	G 3/4	15.1	32.0	35	42.7	15.7	52.8	22.4
TMC - 20M - 8RP	20	G 1/2	11.9	26.0	30	40.4	14.2	50.5	26.0
TMC - 20M - 12RP	20	G 3/4	15.9	32.0	35	42.7	15.7	52.8	26.0
TMC - 22M - 12RP	22	G 3/4	15.9	32.0	35	42.7	15.7	52.8	26.0
TMC - 22M - 16RP	22	G 1	18.3	39.0	40	45.2	18.3	55.3	26.0
TMC - 25M - 12RP	25	G 3/4	15.9	32.0	35	45.2	15.7	57.5	31.3
TMC - 25M - 16RP	25	G 1	19.8	39	40	47.8	18.3	60.1	31.3
TMC - 28M - 16RP	28	G1	19.8	39.0	40	49.3	18.3	70.1	36.6
TMC - 28M - 20RP	28	G 1-1/4	21.8	49.0	50	53.1	19.8	73.9	36.6
TMC - 32M - 20RP	32	G 1-1/4	25.0	49.0	50	55.9	19.8	78.9	42.0
TMC - 38M - 24RP	38	G 1-1/2	31.8	54.7	55	61.7	20.6	89.3	49.4

Reference Specifications :

DIN - ISO 2999 •55° Thread angle
BS - 21 •Truncation of root and crest are round
JIS - B0203 •Taper angle 1° 47'

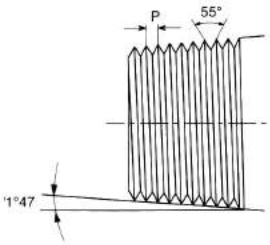

"D" - Dimension is minimum opening - dimensions are for reference only, and are subject to change without notice.

MALE CONNECTOR

TMC-SR

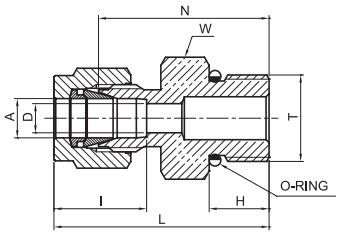

SAE / MS STRAIGHT THREAD BOSS*																
Part Number	A Tube O.D.		T Unif ied Screw	D		W Hex. flat		N		H		L		I		O-ring**
	in	mm	in	in	mm	in	mm	in	mm	in	mm	in	mm	in	mm	
TMC - 2 - 2SR	1/8	3.17	5/16-24	0.09	2.28	7/16	11.1	0.92	23.37	0.30	7.62	1.18	29.97	0.50	12.7	-902
TMC - 4 - 4SR	1/4	6.35	7/16-20	0.19	4.82	9/16	14.3	1.05	26.67	0.36	9.14	1.34	34.03	0.60	15.3	-904
TMC - 4 - 6SR	1/4	6.35	9/16-18	0.19	4.82	11/16	17.5	1.11	28.19	0.39	9.90	1.40	35.56	0.60	15.3	-906
TMC - 4 - 8SR	1/4	6.35	3/4-16	0.19	4.82	7/8	22.2	1.19	30.20	0.44	11.17	1.48	37.59	0.60	15.3	-908
TMC - 4 - 10SR	1/4	6.35	7/8-14	0.19	4.82	1	25.4	1.31	33.27	0.50	12.70	1.60	40.64	0.60	15.3	-910
TMC - 5 - 5SR	5/16	7.93	1/2-20	0.25	6.40	5/8	15.9	1.08	27.43	0.36	9.14	1.37	34.80	0.64	16.2	-905
TMC - 6 - 4SR	3/8	9.52	7/16-20	0.20	5.10	5/8	15.9	1.11	28.19	0.36	9.14	1.40	35.56	0.66	16.9	-904
TMC - 6 - 6SR	3/8	9.52	9/16-18	0.28	7.11	11/16	17.5	1.17	29.71	0.39	9.90	1.46	37.08	0.66	16.9	-906
TMC - 6 - 8SR	3/8	9.52	3/4-16	0.28	7.11	7/8	22.2	1.25	31.75	0.44	11.17	1.54	39.11	0.66	16.9	-908
TMC - 6 - 10SR	3/8	9.52	7/8-14	0.28	7.11	1	25.4	1.37	34.80	0.50	12.70	1.66	42.16	0.66	16.9	-910
TMC - 8 - 6SR	1/2	12.70	9/16-18	0.28	7.11	13/16	20.6	1.14	28.95	0.39	9.90	1.54	39.11	0.90	22.9	-906
TMC - 8 - 8SR	1/2	12.70	3/4-16	0.41	10.41	7/8	22.2	1.25	31.75	0.44	11.17	1.65	41.91	0.90	22.9	-908
TMC - 8 - 10SR	1/2	12.70	7/8-14	0.41	10.41	1	25.4	1.37	34.80	0.50	12.70	1.77	44.96	0.90	22.9	-910
TMC - 8 - 12SR	1/2	12.70	1-1/16-12	0.41	10.41	1-1/4	31.8	1.53	38.86	0.59	14.98	1.93	49.02	0.90	22.9	-912
TMC - 10 - 8SR	5/8	15.87	3/4-16	0.42	10.66	15/16	23.8	1.25	31.75	0.44	11.17	1.65	41.91	0.96	24.4	-908
TMC - 10 - 10SR	5/8	15.87	7/8-14	0.50	12.70	1	25.4	1.38	35.05	0.50	12.70	1.78	45.21	0.96	24.4	-910
TMC - 12 - 8SR	3/4	19.05	3/4-16	0.42	10.66	1-1/16	27.0	1.41	35.81	0.44	11.17	1.81	46.00	0.96	24.5	-908
TMC - 12 - 12SR	3/4	19.05	1-1/16-12	0.62	15.74	1-1/4	31.8	1.53	38.86	0.59	14.98	1.93	49.02	0.96	24.5	-912
TMC - 14 - 14SR	7/8	22.22	1-3/16-12	0.72	18.29	1-3/8	34.9	1.53	38.86	0.59	14.98	1.93	49.02	1.02	25.9	-914
TMC - 16 - 12SR	1	25.40	1-1/16-12	0.66	16.76	1-3/8	34.9	1.62	41.20	0.59	14.98	2.10	53.34	1.23	31.2	-912
TMC - 16 - 16SR	1	25.40	1-5/16-12	0.88	22.35	1-1/2	38.1	1.66	42.16	0.59	14.98	2.14	54.35	1.23	31.2	-916
TMC - 20 - 20SR	1-1/4	31.75	1-5/8-12	1.09	27.70	1-7/8	47.6	1.82	46.23	0.59	15.10	2.69	68.33	1.62	41.2	-920
TMC - 24 - 24SR	1-1/2	38.10	1-7/8-12	1.34	34.00	2-1/8	54.0	1.99	50.55	0.59	15.10	3.06	77.72	1.97	50.0	-924
TMC - 32 - 32SR	2	50.80	2-1/2-12	1.81	45.97	2-3/4	69.9	2.53	64.26	0.59	15.10	4.00	101.60	2.66	67.6	-932

"D" - Dimension is minimum opening - dimensions are for reference only, and are subject to change without notice.
* SAE J 1926 and MS 16142. See page 61 for mounting dimensions.
** O-Rings used are KFM (Viton®) 90 Durometer. Other O-Ring material are available on reguest.

MALE CONNECTOR

TMC-NOR

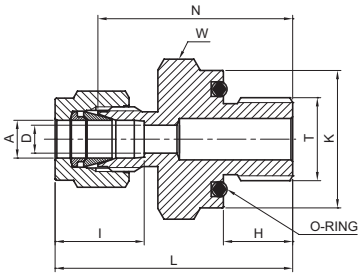

O-SEAL NPT TAPERED THREAD																		
Part Number	A Tube O.D.		T NPT Short	D		K		W Hex. flat		N		H		L		I		O-ring*
	in	mm	in	in	mm	in	mm	in	mm	in	mm	in	mm	in	mm	in	mm	
TMC - 2 - 2NOR	1/8	3.17	1/8	0.09	2.28	0.74	18.79	3/4	19.1	1.03	26.16	0.28	7.11	1.29	32.76	0.50	12.7	-111
TMC - 4 - 2NOR	1/4	6.35	1/8	0.19	4.82	0.74	18.79	3/4	19.1	1.09	27.70	0.28	7.11	1.38	35.05	0.60	15.3	-111
TMC - 4 - 4NOR	1/4	6.35	1/4	0.19	4.82	0.93	23.62	15/16	23.8	1.22	31.00	0.38	9.65	1.51	38.40	0.60	15.3	-113
TMC - 6 - 4NOR	3/8	9.52	1/4	0.28	7.11	0.93	23.62	15/16	23.8	1.28	32.51	0.38	9.65	1.57	39.88	0.66	16.9	-113
TMC - 6 - 6NOR	3/8	9.52	3/8	0.28	7.11	1.12	28.45	1-1/8	28.6	1.34	34.04	0.41	10.41	1.63	41.40	0.66	16.9	-116
TMC - 6 - 8NOR	3/8	9.52	1/2	0.28	7.11	1.30	33.02	1-5/16	33.3	1.56	39.62	0.53	13.46	1.85	46.99	0.66	16.9	-212
TMC - 8 - 8NOR	1/2	12.70	1/2	0.41	10.41	1.30	33.02	1-5/16	33.3	1.56	39.62	0.53	13.46	1.96	49.78	0.90	22.9	-212

MALE CONNECTOR

TMC-OR

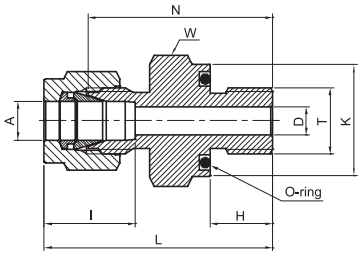

O-SEAL MALE UNF THREAD																		
Part Number	A Tube O.D.		T Unif ied Screw	D		K		W Hex. flat		N		H		L		I		O-ring*
	in	mm	in	in	mm	in	mm	in	mm	in	mm	in	mm	in	mm	in	mm	
TMC - 1 - 2OR	1/16	1.58	5/16-24	0.05	1.27	0.55	14.0	9/16	14.3	0.90	22.86	0.34	8.63	1.05	26.67	0.34	8.6	-011
TMC - 2 - 2OR	1/8	3.17	5/16-24	0.09	2.28	0.55	14.0	9/16	14.3	1.03	26.20	0.34	8.63	1.29	32.77	0.50	12.7	-011
TMC - 3 - 3OR	3/16	4.76	3/8-24	0.12	3.04	0.62	15.75	5/8	15.9	1.09	27.70	0.38	9.65	1.35	34.29	0.54	13.7	-012
TMC - 4 - 4OR	1/4	6.35	7/16-20	0.19	4.22	0.74	18.80	3/4	19.1	1.22	31.00	0.41	10.41	1.51	38.35	0.60	15.3	-111
TMC - 5 - 5OR	5/16	7.93	1/2-20	0.25	6.35	0.86	21.84	7/8	22.2	1.31	33.30	0.44	11.17	1.60	40.64	0.64	16.2	-112
TMC - 6 - 6OR	3/8	9.52	9/16-18	0.28	7.11	0.93	23.62	15/16	23.8	1.38	35.05	0.47	11.93	1.67	40.89	0.66	16.9	-113
TMC - 8 - 8OR	1/2	12.70	3/4-16	0.41	10.41	1.12	28.45	1-1/8	28.6	1.41	35.81	0.47	11.93	1.81	45.77	0.90	22.9	-116
TMC - 12 - 12OR	3/4	19.05	1-1/16-12	0.62	15.74	1.49	37.85	1-1/2	38.1	1.66	42.20	0.56	14.22	2.06	52.32	0.96	24.5	121
TMC - 16 - 16OR	1	25.40	1-5/16-12	0.88	22.35	1.74	44.20	1-3/4	44.5	1.81	45.97	0.56	14.22	2.29	58.17	1.23	31.2	125

"D" - Dimension is minimum opening - dimensions are for reference only, and are subject to change without notice.
* O-Rings used are NBR (Perbunan®) 70 Durometer.

MALE PIPE WELD CONNECTOR

TMPWC

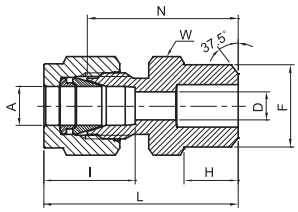

TUBE (METRIC)TO PIPE (INCH)									
Part Number	A Tube O.D.	F Pipe size		D	W Hex. flat	N	H	L	I
	mm	in	mm	mm	mm	mm	mm	mm	mm
TMPWC - 3M - 2TW	3	1/8	10.30	2.4	12	23.1	9.7	30.5	12.9
TMPWC - 4M - 2TW	4	1/8	10.30	2.4	12	24.1	9.7	31.2	13.7
TMPWC - 6M - 2TW	6	1/8	10.30	4.8	14	25.4	9.7	32.8	15.3
TMPWC - 6M - 4TW	6	1/4	13.70	4.8	14	30.2	14.2	37.9	15.3
TMPWC - 8M - 2TW	8	1/8	10.30	5.1	15	26.7	9.7	34.2	16.2
TMPWC - 8M - 4TW	8	1/4	13.70	6.4	15	31.2	14.2	38.7	16.2
TMPWC - 8M - 8TW	8	1/2	21.34	6.4	22	37.3	19.0	44.8	16.2
TMPWC - 10M - 4TW	10	1/4	13.70	7.1	18	33.3	14.2	40.9	17.2
TMPWC - 10M - 6TW	10	3/8	17.10	7.9	18	32.5	14.2	40.9	17.2
TMPWC - 10M - 8TW	10	1/2	21.34	7.9	22	38.1	19.0	45.8	17.2
TMPWC - 12M - 4TW	12	1/4	13.70	7.1	22	33.3	14.2	43.4	22.8
TMPWC - 12M - 6TW	12	3/8	17.10	9.5	22	33.3	14.2	43.4	22.8
TMPWC - 12M - 8TW	12	1/2	21.34	9.5	22	38.1	19.0	49.0	22.8
TMPWC - 15M - 8TW	15	1/2	21.34	11.9	24	38.9	19.0	49.0	24.4
TMPWC - 16M - 8TW	16	1/2	21.34	12.7	24	38.9	19.0	49.0	24.4
TMPWC - 18M - 8TW	18	1/2	21.34	13.5	27	40.4	19.0	50.5	24.4

TUBE (INCH) TO PIPE (INCH)																
Part Number	A Tube O.D.		F Pipe size		D		W Hex. flat		N		H		L		I	
	in	mm	in	mm	in	mm	in	mm	in	mm	in	mm	in	mm	in	mm
TMPWC - 2 - 2TW	1/8	3.17	1/8	10.30	0.09	2.28	7/16	11.1	0.94	23.88	0.38	9.65	1.20	30.48	0.50	12.7
TMPWC - 3 - 2TW	3/16	4.76	1/8	10.30	0.12	3.04	7/16	11.1	0.97	24.60	0.38	9.65	1.23	31.25	0.54	13.7
TMPWC - 4 - 2TW	1/4	6.35	1/8	10.30	0.19	4.82	1/2	12.7	1.00	25.40	0.38	9.65	1.29	32.77	0.60	15.3
TMPWC - 4 - 4TW	1/4	6.35	1/4	13.70	0.19	4.82	9/16	14.3	1.19	30.22	0.56	14.22	1.48	37.59	0.60	15.3
TMPWC - 5 - 2TW	5/16	7.93	1/8	10.30	0.20	5.08	9/16	14.3	1.05	26.67	0.38	9.65	1.34	34.04	0.64	16.2
TMPWC - 5 - 4TW	5/16	7.93	1/4	13.70	0.25	6.35	9/16	14.3	1.23	31.24	0.56	14.22	1.52	38.61	0.64	16.2
TMPWC - 6 - 4TW	3/8	9.52	1/4	13.70	0.28	7.11	5/8	15.9	1.28	32.51	0.56	14.22	1.57	39.87	0.66	16.9
TMPWC - 6 - 6TW	3/8	9.52	3/8	17.10	0.28	7.11	11/16	17.5	1.28	32.51	0.56	14.22	1.57	39.87	0.66	16.9
TMPWC - 6 - 8TW	3/8	9.52	1/2	21.34	0.28	7.11	7/8	22.2	1.53	38.86	0.75	19.05	1.82	46.22	0.66	16.9
TMPWC - 8 - 6TW	1/2	12.70	3/8	17.10	0.41	10.41	13/16	20.6	1.31	33.27	0.56	14.22	1.71	44.43	0.90	22.9
TMPWC - 8 - 8TW	1/2	12.70	1/2	21.34	0.41	10.41	7/8	22.2	1.53	38.86	0.75	19.05	1.93	49.00	0.90	22.9
TMPWC - 8 -12TW	1/2	12.70	3/4	26.67	0.41	10.41	1-1/16	27.0	1.59	40.40	0.75	19.05	1.99	50.55	0.90	22.9
TMPWC - 10 - 8TW	5/8	15.87	1/2	21.34	0.50	12.70	15/16	23.8	1.53	38.86	0.75	19.05	1.93	49.02	0.96	24.4
TMPWC - 12 - 12TW	3/4	19.05	3/4	26.67	0.62	15.74	1-1/16	27.0	1.59	40.40	0.75	19.05	1.99	50.55	0.96	24.5
TMPWC - 16 - 16TW	1	25.4	1	33.4	0.88	22.35	1-3/8	34.9	1.97	50.03	0.94	23.87	2.45	62.23	1.23	31.2
TMPWC - 20 - 20TW	1-1/2	31.75	1-1/4	42.16	1.09	27.7	1-3/4	44.5	2.17	55.12	0.94	23.88	3.04	77.22	1.62	41.2
TMPWC - 24 - 24TW	1-1	38.1	1-1/2	48.26	1.34	34	2-1/8	54.0	2.43	61.72	1.03	26.16	3.5	88.9	1.97	50.0
TMPWC - 32 - 32TW	2	50.8	2	60.33	1.81	45.97	2-3/4	69.9	3.0	76.2	1.06	26.92	4.47	113.34	2.66	67.6

“ D” - Dimension is the minimum opening. These fittings may have a larger opening at the weld end.
The wall thickness of welding edge is based on SCH 80.

TUBE SOCKET WELD CONNECTOR

TTSWC

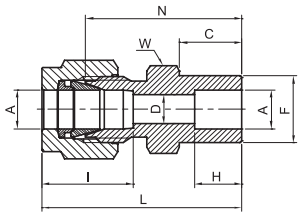

TUBE (INCH) TO TUBE (INCH)																		
Part Number	A Tube O.D.		C		D		W Hex. flat		F		H		L		I		N	
	in	mm	in	mm	in	mm	in	mm	in	mm	in	mm	in	mm	in	mm	in	mm
TTSWC - 2 - 2SW	1/8	3.17	0.34	8.64	0.09	2.28	7/16	11.1	0.31	7.87	0.25	6.35	0.50	28.96	1.14	12.7	0.88	22.35
TTSWC - 4 - 4SW	1/4	6.35	0.41	10.41	0.19	4.80	1/2	12.7	0.44	11.18	0.31	7.90	0.60	33.53	1.32	15.3	1.03	26.16
TTSWC - 6 - 6SW	3/8	9.52	0.47	11.94	0.28	7.10	5/8	15.9	0.62	15.75	0.38	9.65	0.66	37.60	1.48	16.9	1.19	30.23
TTSWC - 8 - 8SW	1/2	12.70	0.47	11.94	0.41	10.40	13/16	20.6	0.75	19.05	0.50	12.70	0.90	41.15	1.62	22.9	1.22	31.00
TTSWC - 12 - 12SW	3/4	19.05	0.47	11.94	0.62	15.80	1-1/16	27.0	1.05	26.67	0.56	14.20	0.96	43.43	1.71	24.5	1.31	33.28
TTSWC - 16 - 16SW	1	25.40	0.56	14.22	0.88	22.35	1-3/8	34.9	1.31	33.27	0.75	19.05	1.23	52.58	2.07	31.2	1.59	40.40

"D" - Dimension is minimum opening - dimensions are for reference only, and are subject to change without notice.

WELD BULKHEAD UNION

TWBU

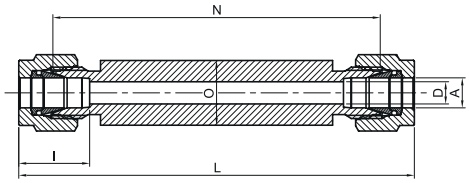

TUBE (METRIC) TO MALE NPT THREAD						
Part Number	A Tube O.D.	D	N	L	I	O
	mm	mm	mm	mm	mm	mm
TWBU - 2M	2	1.7	67.3	80.5	12.9	12.0
TWBU - 3M	3	2.4	67.3	80.5	12.9	12.0
TWBU - 4M	4	2.4	69.0	82.2	13.7	12.0
TWBU - 6M	6	4.8	70.5	85.3	15.3	12.0
TWBU - 8M	8	6.3	72.1	87.1	16.2	16.0
TWBU - 10M	10	7.9	73.7	88.9	17.2	19.0
TWBU - 12M	12	9.5	73.6	93.8	22.8	23.0
TWBU - 15M	15	11.9	73.7	93.9	22.8	25.0
TWBU - 16M	16	12.7	73.7	93.9	24.4	28.0
TWBU - 18M	18	15.1	73.7	93.9	24.4	28.0
TWBU - 20M	20	15.9	73.7	93.9	24.4	32.0
TWBU - 22M	22	18.3	73.7	93.9	26.0	32.0
TWBU - 25M	25	21.8	78.6	103.2	31.3	38.0
TWBU - 28M	28	21.8	81.7	123.3	36.6	45.0
TWBU - 32M	32	28.6	87.1	132.8	42.0	50.0
TWBU - 38M	38	33.7	90.9	146.1	49.4	60.0

TUBE (METRIC) TO MALE NPT THREAD								
Part Number	A Tube O.D.		D		N	L	I	O
	mm		mm		mm	mm	mm	mm
TWBU - 1	1/16	1.58	0.05	1.27	64.2	71.82	8.6	10.00
TWBU - 2	1/8	3.17	0.09	2.28	67.2	80.41	12.7	12.00
TWBU - 3	3/16	4.76	0.12	3.04	69.0	82.2	13.7	12.00
TWBU - 4	1/4	6.35	0.19	4.82	70.8	85.53	15.3	14.00
TWBU - 5	5/16	7.93	0.25	6.35	73.7	88.4	16.3	16.00
TWBU - 6	3/8	9.52	0.28	7.11	73.7	88.43	16.9	19.00
TWBU - 8	1/2	12.70	0.41	10.41	73.7	94.02	22.9	23.00
TWBU - 10	5/8	15.87	0.50	12.7	73.7	94.02	24.4	25.00
TWBU - 12	3/4	19.05	0.62	15.74	73.7	94.02	24.5	28.00
TWBU - 14	7/8	22.22	0.72	18.28	73.7	93.76	25.9	32.00
TWBU - 16	1	25.40	0.88	22.35	78.5	102.89	31.2	35.00
TWBU - 20	1-1/4	31.75	1.09	27.70	83.9	128.1	41.2	50.00
TWBU - 24	1-1/2	38.10	1.34	34.00	86.1	140.45	50.0	55.00
TWBU - 32	2	50.80	1.81	45.97	100.9	175.58	67.6	80.00

"D" - Dimension is minimum opening - dimensions are for reference only, and are subject to change without notice.

MALE 90° ELBOW

TME

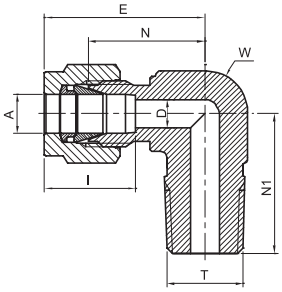

TUBE (METRIC) MALE NPT THREAD									
Part Number	A Tube O.D.	T NPT	D	W Wrench flat		N	E	N1	I
	mm	in	mm	in	mm	mm	mm	mm	mm
TME - 3M - 2N	3	1/8	2.4	7/16	11.1	17.0	23.6	17.8	12.9
TME - 3M - 4N	3	1/4	2.4	1/2	12.7	18.0	24.6	23.4	12.9
TME - 4M - 2N	4	1/8	2.4	1/2	12.7	18.8	25.4	18.8	13.7
TME - 4M - 4N	4	1/4	2.4	1/2	12.7	18.8	25.4	23.4	13.7
TME - 6M - 2N	6	1/8	4.8	1/2	12.7	19.6	27.0	18.8	15.3
TME - 6M - 4N	6	1/4	4.8	1/2	12.7	19.6	27.0	23.4	15.3
TME - 6M - 6N	6	3/8	4.8	11/16	17.5	22.4	29.8	26.2	15.3
TME - 6M - 8N	6	1/2	4.8	13/16	20.6	24.4	31.8	33.0	15.3
TME - 8M - 2N	8	1/8	4.8	9/16	14.3	21.3	28.8	19.8	16.2
TME - 8M - 4N	8	1/4	6.4	9/16	14.3	21.3	28.8	24.4	16.2
TME - 8M - 6N	8	3/8	6.4	11/16	17.5	23.1	30.6	26.2	16.2
TME - 8M - 8N	8	1/2	6.4	13/16	20.6	25.1	32.6	33.0	16.2
TME - 10M - 2N	10	1/8	4.8	11/16	17.5	23.9	31.5	21.6	17.2
TME - 10M - 4N	10	1/4	7.1	11/16	17.5	23.9	31.5	26.2	17.2
TME - 10M - 6N	10	3/8	7.9	11/16	17.5	23.9	31.5	26.2	17.2
TME - 10M - 8N	10	1/2	7.9	13/16	20.6	25.9	33.5	33.0	17.2
TME - 12M - 2N	12	1/8	4.8	13/16	20.6	25.9	36.0	23.6	22.8
TME - 12M - 4N	12	1/4	7.1	13/16	20.6	25.9	36.0	28.2	22.8
TME - 12M - 6N	12	3/8	9.5	13/16	20.6	25.9	36.0	28.2	22.8
TME - 12M - 8N	12	1/2	9.5	13/16	20.6	25.9	36.0	33.0	22.8
TME - 12M - 12N	12	3/4	9.5	1-1/16	27.0	29.7	39.8	36.8	22.8
TME - 15M - 8N	15	1/2	11.9	15/16	23.8	27.9	38.0	35.1	24.4
TME - 16M - 6N	16	3/8	9.5	15/16	23.8	27.9	38.0	30.2	24.4
TME - 16M - 8N	16	1/2	11.9	15/16	23.8	27.9	38.0	35.1	24.4
TME - 16M - 12N	16	3/4	12.7	1-1/16	27.0	29.7	39.8	36.8	24.4
TME - 18M - 8N	18	1/2	11.9	1-1/16	27.0	29.7	39.8	36.8	24.4
TME - 18M - 12N	18	3/4	15.1	1-1/16	27.0	29.7	39.8	36.8	24.4
TME - 20M - 8N	20	1/2	11.9	1-3/8	34.9	34.5	44.6	41.7	26.0
TME - 20M - 12N	20	3/4	15.9	1-3/8	34.9	34.5	44.6	41.7	26.0
TME - 22M - 12N	22	3/4	15.9	1-3/8	34.9	34.5	44.6	41.7	26.0
TME - 22M - 16N	22	1	18.3	1-3/8	34.9	34.5	44.6	46.5	26.0
TME - 25M - 12N	25	3/4	15.9	1-3/8	34.9	36.8	49.1	41.7	31.3
TME - 25M - 16N	25	1	21.8	1-3/8	34.9	36.8	49.1	46.5	31.3

For inches, see next page

"D" - Dimension is minimum opening - dimensions are for reference only, and are subject to change without notice.

MALE 90° ELBOW

TME

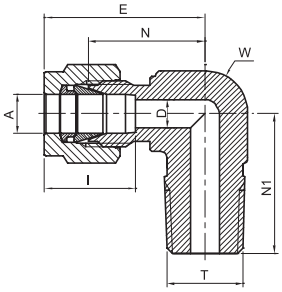

TUBE (INCH) MALE NPT THREAD															
Part Number	A Tube O.D.		T NPT	D		W Wrench flat		N		E		N1		I	
	in	mm	in	in	mm	in	mm	in	mm	in	mm	in	mm	in	mm
TME - 1 - 1N	1/16	1.58	1/16	0.05	1.27	7/16	11.1	0.60	15.24	0.75	19.05	0.70	17.78	0.34	8.6
TME - 1 - 2N	1/16	1.58	1/8	0.05	1.27	7/16	11.1	0.60	15.24	0.75	19.05	0.70	17.78	0.34	8.6
TME - 2 - 2N	1/8	3.17	1/8	0.09	2.28	7/16	11.1	0.67	17.02	0.93	23.62	0.70	17.78	0.50	12.7
TME - 2 - 4N	1/8	3.17	1/4	0.09	2.28	1/2	12.7	0.71	18.03	0.97	24.64	0.92	23.37	0.50	12.7
TME - 3 - 2N	3/16	4.76	1/8	0.12	3.04	1/2	12.7	0.74	18.80	1.00	25.40	0.74	18.80	0.54	13.7
TME - 3 - 4N	3/16	4.76	1/4	0.12	3.04	1/2	12.7	0.74	18.80	1.00	25.40	0.92	23.37	0.54	13.7
TME - 4 - 1N	1/4	6.35	1/16	0.12	3.04	1/2	12.7	0.77	19.55	1.06	26.9	0.74	18.79	0.60	15.3
TME - 4 - 2N	1/4	6.35	1/8	0.19	4.82	1/2	12.7	0.77	19.56	1.06	26.92	0.74	18.80	0.60	15.3
TME - 4 - 4N	1/4	6.35	1/4	0.19	4.82	1/2	12.7	0.77	19.56	1.06	26.92	0.92	23.37	0.60	15.3
TME - 4 - 6N	1/4	6.35	3/8	0.19	4.82	11/16	17.5	0.88	22.35	1.17	29.71	1.03	26.16	0.60	15.3
TME - 4 - 8N	1/4	6.35	1/2	0.19	4.82	13/16	20.6	0.96	24.38	1.25	31.75	1.30	33.02	0.60	15.3
TME - 5 - 2N	5/16	7.93	1/8	0.19	4.82	9/16	14.3	0.84	21.34	1.13	28.70	0.78	19.81	0.64	16.2
TME - 5 - 4N	5/16	7.93	1/4	0.25	6.35	9/16	14.3	0.84	21.34	1.13	28.70	0.96	24.38	0.64	16.2
TME - 5 - 6N	5/16	7.93	3/8	0.25	6.35	11/16	17.5	0.91	23.11	1.20	30.48	1.03	26.16	0.64	16.2
TME - 6 - 2N	3/8	9.52	1/8	0.19	4.82	5/8	15.9	0.91	23.11	1.20	30.48	0.82	20.83	0.66	16.9
TME - 6 - 4N	3/8	9.52	1/4	0.28	7.11	5/8	15.9	0.91	23.11	1.20	30.48	1.00	25.40	0.66	16.9
TME - 6 - 6N	3/8	9.52	3/8	0.28	7.11	11/16	17.5	0.94	23.87	1.23	31.24	1.03	26.16	0.66	16.9
TME - 6 - 8N	3/8	9.52	1/2	0.28	7.11	13/16	20.6	1.02	25.90	1.31	33.28	1.30	33.02	0.66	16.9
TME - 6 - 12N	3/8	9.52	3/4	0.28	7.11	1-1/16	27.0	1.17	29.71	1.46	37.08	1.45	36.83	0.66	16.9
TME - 8 - 4N	1/2	12.70	1/4	0.28	7.11	13/16	20.6	1.02	25.90	1.42	36.07	1.11	28.19	0.90	22.9
TME - 8 - 6N	1/2	12.70	3/8	0.38	9.65	13/16	20.6	1.02	25.90	1.42	36.07	1.11	28.19	0.90	22.9
TME - 8 - 8N	1/2	12.70	1/2	0.41	10.41	13/16	20.6	1.02	25.90	1.42	36.07	1.30	33.02	0.90	22.9
TME - 8 - 12N	1/2	12.70	3/4	0.41	10.41	1-1/16	27.0	1.17	29.71	1.57	39.88	1.45	36.83	090	22.9
TME - 10 - 6N	5/8	15.87	3/8	0.38	9.61	15/16	23.8	1.10	27.94	1.50	38.10	1.19	30.23	0.96	24.4
TME - 10 - 8N	5/8	15.87	1/2	0.47	11.94	15/16	23.8	1.10	27.94	1.50	38.10	1.38	35.05	0.96	24.4
TME - 10 - 12N	5/8	15.87	3/4	0.50	12.70	1-1/16	27.0	1.17	29.71	1.57	39.88	1.45	36.83	0.96	24.4
TME - 12 - 8N	3/4	19.05	1/2	0.47	15.74	1-1/16	27.0	1.17	29.71	1.57	39.88	1.45	36.83	0.96	24.5
TME - 12 - 12N	3/4	19.05	3/4	0.62	15.74	1-1/16	27.0	1.17	29.71	1.57	39.88	1.45	36.83	0.96	24.5
TME - 14 - 12N	7/8	22.22	3/4	0.62	15.74	1-3/16	34.9	1.36	34.54	1.76	44.70	1.64	41.66	1.02	25.9
TME - 16 - 12N	1	25.40	3/4	0.62	15.74	1-3/8	34.9	1.45	36.83	1.93	49.02	1.64	41.66	1.23	31.2
TME - 16 - 16N	1	25.4	1	0.88	22.35	1-3/8	34.9	1.45	36.83	1.93	49.02	1.83	46.48	1.23	31.2
TME - 20 - 20N	1-1/4	31.75	1-1/4	1.09	27.7	1-11/16	42.9	1.75	44.45	2.62	66.5	1.88	47.75	1.62	41.2
TME - 24 - 24N	1-1/2	38.1	1-1/2	1.34	34	2	50.8	2.0	50.8	3.07	78.0	2.38	60.45	1.97	50.0
TME - 32 - 32N	2	50.8	2	1.81	45.97	2-3/4	69.9	2.75	69.85	4.22	107.19	2.78	70.61	2.66	67.6

"D" - Dimension is minimum opening - dimensions are for reference only, and are subject to change without notice.

MALE 90° ELBOW

TME

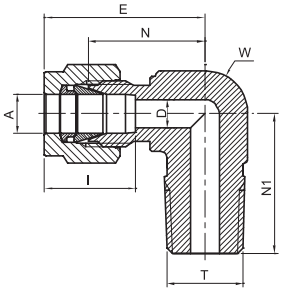

TUBE (METRIC) ISO TAPERED THREAD									
Part Number	A Tube O.D.	T ISO	D	W Wrench flat		N	E	N1	I
	mm	in	mm	in	mm	mm	mm	mm	mm
TME - 3M - 2P	3	R 1/8	2.4	7/16	11.1	17.0	23.6	17.8	12.9
TME - 3M - 4P	3	R 1/4	2.4	1/2	12.7	18.0	24.6	23.4	12.9
TME - 4M - 2P	4	R 1/8	2.4	1/2	12.7	18.8	25.4	18.8	13.7
TME - 4M - 4P	4	R 1/4	2.4	1/2	12.7	18.8	25.4	23.4	13.7
TME - 6M - 2P	6	R 1/8	4.8	1/2	12.7	19.6	27.0	18.8	15.3
TME - 6M - 4P	6	R 1/4	4.8	1/2	12.7	19.6	27.0	23.4	15.3
TME - 6M - 6P	6	R 3/8	4.8	11/16	17.5	22.4	29.8	26.2	15.3
TME - 6M - 8P	6	R 1/2	4.8	13/16	20.6	24.4	31.8	33.0	15.3
TME - 8M - 2P	8	R 1/8	4.8	9/16	14.3	21.3	28.8	19.8	16.2
TME - 8M - 4P	8	R 1/4	6.4	9/16	14.3	21.3	28.8	24.4	16.2
TME - 8M - 6P	8	R 3/8	6.4	11/16	17.5	23.1	30.6	26.2	16.2
TME - 8M - 8P	8	R 1/2	6.4	13/16	20.6	25.1	32.6	33.0	16.2
TME - 10M - 2P	10	R 1/8	4.8	11/16	17.5	23.9	31.5	21.6	17.2
TME - 10M - 4P	10	R 1/4	7.1	11/16	17.5	23.9	31.5	26.2	17.2
TME - 10M - 6P	10	R 3/8	7.9	11/16	17.5	23.9	31.5	26.2	17.2
TME - 10M - 8P	10	R 1/2	7.9	13/16	20.6	25.9	33.5	33.0	17.2
TME - 12M - 2P	12	R 1/8	4.8	13/16	20.6	25.9	36.0	23.6	22.8
TME - 12M - 4P	12	R 1/4	7.1	13/16	20.6	25.9	36.0	28.2	22.8
TME - 12M - 6P	12	R 3/8	9.5	13/16	20.6	25.9	36.0	28.2	22.8
TME - 12M - 8P	12	R 1/2	9.5	13/16	20.6	25.9	36.0	33.0	22.8
TME - 12M - 12P	12	R 3/4	9.5	1-1/16	27.0	29.7	39.8	36.8	22.8
TME - 16M - 6P	16	R 3/8	9.5	15/16	23.8	27.9	38.0	30.2	24.4
TME - 16M - 8P	16	R 1/2	11.9	15/16	23.8	27.9	38.0	35.1	24.4
TME - 18M - 8P	18	R 1/2	11.9	1-1/16	27.0	29.7	39.8	36.8	24.4
TME - 18M - 12P	18	R 3/4	15.1	1-1/16	27.0	29.7	39.8	36.8	24.4
TME - 20M - 8P	20	R 1/2	11.9	1-3/8	34.9	34.5	44.6	41.7	26.0
TME - 20M - 12P	20	R 3/4	15.9	1-3/8	34.9	34.5	44.6	41.7	26.0
TME - 22M - 12P	22	R 3/4	15.9	1-3/8	34.9	34.5	44.6	41.7	26.0
TME - 22M - 16P	22	R 1	18.3	1-3/8	34.9	34.5	44.6	46.5	26.0
TME - 25M - 12P	25	R 3/4	15.9	1-3/8	34.9	36.8	49.1	41.7	31.3
TME - 25M - 16P	25	R 1	21.8	1-3/8	34.9	36.8	49.1	46.5	31.3

Reference Specififcations :

DIN - ISO 2999 •55° Thread angle
BS - 21 •Truncation of root and crest are round
JIS - B0203 •Taper angle 1° 47'

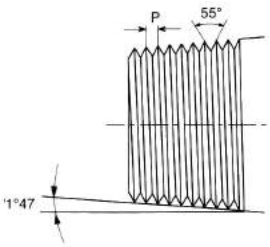

"D" - Dimension is minimum opening - dimensions are for reference only, and are subject to change without notice.

MALE 90° ELBOW

TME

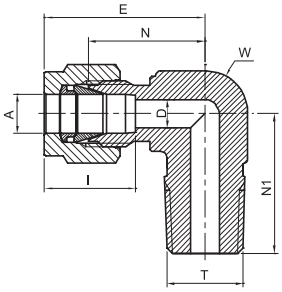

TUBE (INCH) ISO TAPERED THREAD															
Part Number	A Tube O.D.		T ISO	D		W Wrench flat		N		E		N1		I	
	in	mm	in	in	mm	in	mm	in	mm	in	mm	in	mm	in	mm
TME - 1 - 1P	1/16	1.58	R 1/16	0.05	1.27	7/16	11.1	0.60	15.24	0.75	19.05	0.70	17.78	0.34	8.6
TME - 1 - 2P	1/16	1.58	R 1/8	0.05	1.27	7/16	11.1	0.60	15.24	0.75	19.05	0.70	17.78	0.34	8.6
TME - 2 - 2P	1/8	3.17	R 1/8	0.09	2.28	7/16	11.1	0.67	17.02	0.93	23.62	0.70	17.78	0.50	12.7
TME - 2 - 4P	1/8	3.17	R 1/4	0.09	2.28	1/2	12.7	0.71	18.03	0.97	24.64	0.92	23.37	0.50	12.7
TME - 3 - 2P	3/16	4.76	R 1/8	0.12	3.04	1/2	12.7	0.74	18.80	1.00	25.40	0.74	18.80	0.54	13.7
TME - 3 - 4P	3/16	4.76	R 1/4	0.12	3.04	1/2	12.7	0.74	18.80	1.00	25.40	0.92	23.37	0.54	13.7
TME - 4 - 1P	1/4	6.35	R 1/16	0.12	3.04	1/2	12.7	0.77	19.55	1.06	26.9	0.74	18.79	0.60	15.3
TME - 4 - 2P	1/4	6.35	R 1/8	0.19	4.82	1/2	12.7	0.77	19.56	1.06	26.92	0.74	18.80	0.60	15.3
TME - 4 - 4P	1/4	6.35	R 1/4	0.19	4.82	1/2	12.7	0.77	19.56	1.06	26.92	0.92	23.37	0.60	15.3
TME - 4 - 6P	1/4	6.35	R 3/8	0.19	4.82	11/16	17.5	0.88	22.35	1.17	29.71	1.03	26.16	0.60	15.3
TME - 4 - 8P	1/4	6.35	R 1/2	0.19	4.82	13/16	20.6	0.96	24.38	1.25	31.75	1.30	33.02	0.60	15.3
TME - 5 - 2P	5/16	7.93	R 1/8	0.19	4.82	9/16	14.3	0.84	21.34	1.13	28.70	0.78	19.81	0.64	16.2
TME - 5 - 4P	5/16	7.93	R 1/4	0.25	6.35	9/16	14.3	0.84	21.34	1.13	28.70	0.96	24.38	0.64	16.2
TME - 5 - 6P	5/16	7.93	R 3/8	0.25	6.35	11/16	17.5	0.91	23.11	1.20	30.48	1.03	26.16	0.64	16.2
TME - 6 - 2P	3/8	9.52	R 1/8	0.19	4.82	5/8	15.9	0.91	23.11	1.20	30.48	0.82	20.83	0.66	16.9
TME - 6 - 4P	3/8	9.52	R 1/4	0.28	7.11	5/8	15.9	0.91	23.11	1.20	30.48	1.00	25.40	0.66	16.9
TME - 6 - 6P	3/8	9.52	R 3/8	0.28	7.11	11/16	17.5	0.94	23.87	1.23	31.24	1.03	26.16	0.66	16.9
TME - 6 - 8P	3/8	9.52	R 1/2	0.28	7.11	13/16	20.6	1.02	25.90	1.31	33.28	1.30	33.02	0.66	16.9
TME - 6 - 12P	3/8	9.52	R 3/4	0.28	7.11	1-1/16	27.0	1.17	29.71	1.46	37.08	1.45	36.83	0.66	16.9
TME - 8 - 4P	1/2	12.70	R 1/4	0.28	7.11	13/16	20.6	1.02	25.90	1.42	36.07	1.11	28.19	0.90	22.9
TME - 8 - 6P	1/2	12.70	R 3/8	0.38	9.65	13/16	20.6	1.02	25.90	1.42	36.07	1.11	28.19	0.90	22.9
TME - 8 - 8P	1/2	12.70	R 1/2	0.41	10.41	13/16	20.6	1.02	25.90	1.42	36.07	1.30	33.02	0.90	22.9
TME - 8 - 12P	1/2	12.70	R 3/4	0.41	10.41	1-1/16	27.0	1.17	29.71	1.57	39.88	1.45	36.83	090	22.9
TME - 10 - 6P	5/8	15.87	R 3/8	0.38	9.61	15/16	23.8	1.10	27.94	1.50	38.10	1.19	30.23	0.96	24.4
TME - 10 - 8P	5/8	15.87	R 1/2	0.47	11.94	15/16	23.8	1.10	27.94	1.50	38.10	1.38	35.05	0.96	24.4
TME - 10 - 12P	5/8	15.87	R 3/4	0.50	12.70	1-1/16	27.0	1.17	29.71	1.57	39.88	1.45	36.83	0.96	24.4
TME - 12 - 8P	3/4	19.05	R 1/2	0.47	15.74	1-1/16	27.0	1.17	29.71	1.57	39.88	1.45	36.83	0.96	24.5
TME - 12 - 12P	3/4	19.05	R 3/4	0.62	15.74	1-1/16	27.0	1.17	29.71	1.57	39.88	1.45	36.83	0.96	24.5
TME - 14 - 12P	7/8	22.22	R 3/4	0.62	15.74	1-3/16	34.9	1.36	34.54	1.76	44.70	1.64	41.66	1.02	25.9
TME - 16 - 12P	1	25.40	R 3/4	0.62	15.74	1-3/8	34.9	1.45	36.83	1.93	49.02	1.64	41.66	1.23	31.2
TME - 16 - 16P	1	25.4	R 1	0.88	22.35	1-3/8	34.9	1.45	36.83	1.93	49.02	1.83	46.48	1.23	31.2
TME – 20 - 20P	1-1/4	31.75	R 1-1/4	1.09	27.7	1-11/16	42.9	1.75	44.45	2.62	66.5	1.88	47.75	1.62	41.2
TME – 24 - 24P	1-1/2	38.1	R 1-1/2	1.34	34.0	2	50.8	2.0	50.8	3.07	78.0	2.38	60.45	1.97	50.0
TME – 32 - 32P	2	50.8	R 2	1.81	45.97	2-3/4	69.9	2.75	69.85	4.22	107.19	2.78	70.61	2.66	67.6

"D" - Dimension is minimum opening - dimensions are for reference only, and are subject to change without notice.

MALE PIPE WELD 90^0 ELBOW

TMPWE

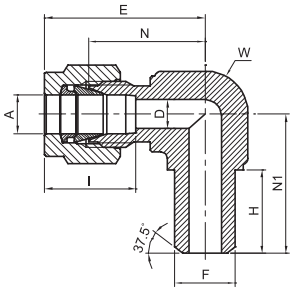

TUBE TO PIPE (INCH)																		
Part Number	A Tube O.D.		F Pipe size		D		W Wrench flat		N		H		E		N1		I	
	in	mm	in	mm	in	mm	in	mm	in	mm	in	mm	in	mm	in	mm	in	mm
TMPWE - 4 - 2TW	1/4	6.35	1/8	10.30	0.19	4.82	1/2	12.7	0.77	19.56	0.38	7.65	1.06	26.92	0.74	18.8	0.60	15.3
TMPWE - 4 - 4TW	1/4	6.35	1/4	13.70	0.19	4.82	1/2	12.7	0.77	19.56	0.56	14.22	1.06	26.92	0.92	23.37	0.60	15.3
TMPWE - 6 - 4TW	3/8	9.52	1/4	13.70	0.28	7.11	5/8	15.9	0.91	23.11	0.56	14.22	1.20	30.48	1.00	25.40	0.66	16.9
TMPWE - 8 - 8TW	1/2	12.70	1/2	21.34	0.41	10.41	13/16	20.6	1.02	25.90	0.75	19.05	1.42	36.06	1.30	33.02	0.90	22.9
TMPWE - 12 - 12TW	3/4	19.05	3/4	26.67	0.62	15.75	1-1/16	27.0	1.17	29.72	0.75	19.05	1.57	39.88	1.45	36.83	0.96	24.5

“ D” - Dimension is the minimum opening. These fittings may have a larger opening at the weld end.
The wall thickness of welding edge is based on SCH 80.

TUBE SOCKET WELD 90^0 ELBOW

TTSWE

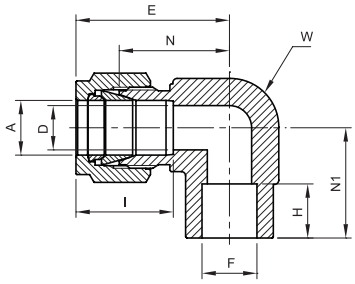

TUBE TO TUBE																		
Part Number	A Tube O.D.		F Pipe size		D		W Wrench flat		N		H		E		N1		I	
	in	mm	in	mm	in	mm	in	mm	in	mm	in	mm	in	mm	in	mm	in	mm
TTSWE- 4 - 4SW	1/4	6.35	1/4	6.35	0.19	4.82	1/2	12.7	0.77	19.60	0.31	7.87	1.06	26.98	0.77	19.60	0.60	15.30
TTSWE - 6 - 6SW	3/8	9.52	3/8	9.52	0.28	7.11	5/8	15.9	0.91	23.11	0.38	9.65	1.20	30.98	0.91	23.11	0.66	16.90
TTSWE - 8 - 8SW	1/2	12.70	1/2	12.70	0.41	10.41	13/16	20.6	1.02	25.90	0.50	12.70	1.42	36.06	1.02	25.90	0.90	22.90
TTSWE - 12 - 12SW	3/4	19.05	3/4	19.05	0.62	15.74	1-1/16	26.98	1.17	29.72	0.56	14.22	1.57	39.87	1.17	29.72	0.96	24.38
TTSWE - 16 - 16SW	1	25.40	1	25.40	0.88	22.35	1-3/8	34.92	1.45	36.83	0.75	19.05	1.93	49.02	1.45	36.83	1.23	31.20

“D” - Dimension is minimum opening - dimensions are for reference only, and are subject to change without notice.

FEMALE 90° ELBOW

TFE

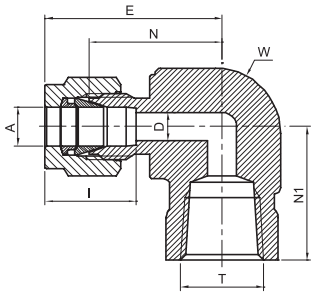

TUBE (METRIC) TO FEMALE NPT THREAD									
Part Number	A Tube O.D.	T NPT	D	W Wrench flat		N	E	N1	I
	mm	in	mm	in	mm	mm	mm	mm	mm
TFE - 6M - 2N	6	1/8	4.8	1/2	12.7	19.6	27.0	21.6	15.3
TFE - 6M - 4N	6	1/4	4.8	11/16	17.5	22.4	29.8	22.4	15.3
TFE - 6M - 6N	6	3/8	4.8	13/16	20.6	24.4	31.7	22.4	15.3
TFE - 6M - 8N	6	1/2	4.8	1	25.4	27.2	34.6	28.4	15.3
TFE - 8M - 4N	8	1/4	6.4	11/16	17.5	23.1	30.6	22.4	16.2
TFE - 8M - 8N	8	1/2	6.4	1	25.4	28	35.2	28.4	16.2
TFE - 10M - 2N	10	1/8	7.9	11/16	17.5	23.9	31.5	21.6	17.2
TFE - 10M - 4N	10	1/4	7.9	11/16	17.5	25	32.6	22.4	17.2
TFE - 10M - 6N	10	3/8	7.9	13/16		25.9	33.5	22.4	17.2
TFE - 10M - 8N	10	1/2	7.9	1	25.4	28.7	36.1	28.4	17.2
TFE - 12M - 4N	12	1/4	9.5	13/16	20.6	25.9	36.0	22.4	22.8
TFE - 12M - 6N	12	3/8	9.5	13/16	20.6	25.9	36.0	22.4	22.8
TFE - 12M - 8N	12	1/2	9.5	1	25.4	28.7	38.8	28.4	22.8
TFE - 16M - 8N	16	1/2	11.9	1-1/16	27.0	29.7	39.9	28.4	22.4

TUBE (INCH) TO FEMALE NPT THREAD															
Part Number	A Tube O.D.		T NPT	D		W Wrench flat		N		E		N1		I	
	in	mm	in	in	mm	in	mm	in	mm	in	mm	in	mm	in	mm
TFE - 2 - 2N	1/8	3.17	1/8	0.09	2.28	1/2	12.7	0.71	18.03	0.97	24.64	0.75	19.05	0.50	12.7
TFE - 2 - 4N	1/8	3.17	1/4	0.09	2.28	11/16	17.5	0.82	20.80	1.08	27.43	0.94	23.75	0.50	12.7
TFE - 3 - 2N	3/16	4.76	1/8	0.12	30.4	1/2	12.7	0.74	18.80	1.00	25.40	0.75	19.05	0.54	13.7
TFE - 4 - 2N	1/4	6.35	1/8	0.19	4.82	1/2	12.7	0.77	19.55	1.06	26.92	0.75	19.05	0.60	15.3
TFE - 4 - 4N	1/4	6.35	1/4	0.19	7.82	11/16	17.5	0.88	22.40	1.17	29.72	0.88	22.40	0.60	15.3
TFE - 4 - 6N	1/4	6.35	3/8	0.19	7.82	13/16	20.6	0.96	24.38	1.25	31.75	0.88	22.40	0.60	15.3
TFE - 4 - 8N	1/4	6.35	1/2	0.19	7.82	1	25.4	1.07	27.18	1.36	34.54	1.12	28.45	0.60	15.3
TFE - 5 - 2N	5/16	7.93	1/8	0.25	6.35	9/16	14.3	0.84	21.30	1.13	28.70	0.75	19.05	0.64	16.2
TFE - 5 - 4N	5/16	7.93	1/4	0.25	6.35	11/16	17.5	0.91	23.11	1.20	30.48	0.88	22.40	0.64	16.2
TFE - 6 - 2N	3/8	9.52	1/8	0.28	7.11	5/8	15.9	0.91	23.11	1.20	30.48	0.75	19.05	0.66	16.9
TFE - 6 - 4N	3/8	9.52	1/4	0.28	7.11	11/16	17.5	0.88	22.40	1.23	31.24	0.88	22.40	0.66	16.9
TFE - 6 - 6N	3/8	9.52	3/8	0.28	7.11	13/16	20.6	1.02	25.90	1.31	33.27	0.88	22.40	0.66	16.9
TFE - 6 - 8N	3/8	9.52	1/2	0.28	7.11	1	25.4	1.12	28.45	1.42	36.07	1.12	28.45	0.66	16.9
TFE - 8 - 4N	1/2	12.70	1/4	0.41	10.41	13/16	20.6	1.02	25.90	1.42	36.07	0.88	22.40	0.90	22.9
TFE - 8 - 6N	1/2	12.70	3/8	0.41	10.41	13/16	20.6	1.02	25.90	1.42	36.07	0.88	22.40	0.90	22.9
TFE - 8 - 8N	1/2	12.70	1/2	0.41	10.41	1	25.4	1.12	28.44	1.53	38.86	1.13	28.70	0.90	22.9
TFE - 10 - 6N	5/8	15.87	3/8	0.50	12.70	15/16	23.8	1.10	27.90	1.50	38.10	0.88	22.40	0.96	24.4
TFE - 10 - 8N	5/8	15.87	1/2	0.50	12.70	1-1/16	27.0	1.17	29.70	1.57	39.86	1.12	28.45	0.96	24.4
TFE - 12 - 8N	3/4	19.05	1/2	0.62	15.74	1-1/16	27.0	1.17	29.70	1.57	39.86	1.12	28.45	0.96	24.5
TFE - 12 - 12N	3/4	19.05	3/4	0.62	15.74	1-3/8	34.9	1.25	31.75	1.76	44.70	1.25	31.75	0.96	24.5
TFE - 14 - 12N	7/8	22.22	3/4	0.72	18.28	1-3/8	34.9	1.25	31.75	1.76	44.70	1.25	31.75	1.02	25.9
TFE - 16 - 12N	1	25.40	3/4	0.88	22.35	1-3/8	34.9	1.25	31.75	1.93	49.02	1.25	31.75	1.23	31.2
TFE - 16 - 16N	1	25.40	1	0.88	22.35	1-11/16	42.9	1.50	38.10	2.11	53.59	1.50	38.10	1.23	31.2

"D" - Dimension is minimum opening - dimensions are for reference only, and are subject to change without notice.

FEMALE 90° ELBOW

TFE

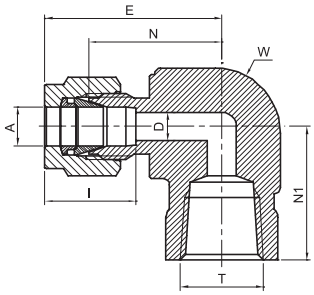

TUBE (METRIC) TO FEMALE ISO TAPERED THREAD									
Part Number	A Tube O.D.	T ISO	D	W Wrench flat		N	E	N1	I
	mm	in	mm	in	mm	mm	mm	mm	mm
TFE - 6M - 2P	6	Rc 1/8	4.8	1/2	12.7	19.6	27	21.6	15.3
TFE - 6M - 4P	6	Rc 1/4	4.8	11/16	17.5	22.4	29.8	22.4	15.3
TFE - 6M - 6P	6	Rc 3/8	4.8	13/16	20.6	24.4	31.7	22.4	15.3
TFE - 6M - 8P	6	Rc 1/2	4.8	1	25.4	27.2	34.6	28.4	15.3
TFE - 8M - 4P	8	Rc 1/4	6.4	11/16	17.5	23.1	30.6	22.4	16.2
TFE - 8M - 8P	8	Rc 1/2	6.4	1	25.4	28	35.2	28.4	16.2
TFE - 10M - 2P	10	Rc 1/8	7.9	11/16	17.5	23.9	31.5	21.6	17.2
TFE - 10M - 4P	10	Rc 1/4	7.9	11/16	17.5	25	32.6	22.4	17.2
TFE - 10M - 6P	10	Rc 3/8	7.9	13/16		25.9	33.5	22.4	17.2
TFE - 10M - 8P	10	Rc 1/2	7.9	1	25.4	28.7	36.1	28.4	17.2
TFE - 12M - 4P	12	Rc 1/4	9.5	13/16	20.6	25.9	36	22.4	22.8
TFE - 12M - 6P	12	Rc 3/8	9.5	13/16	20.6	25.9	36	22.4	22.8
TFE - 12M - 8P	12	Rc 1/2	9.5	1	25.4	28.7	38.8	28.4	22.8
TFE - 16M - 8P	16	Rc 1/2	11.9	1-1/16	27	29.7	39.9	28.4	22.4

TUBE (INCH) TO FEMALE ISO TAPERED THREAD															
Part Number	A Tube O.D.		T ISO	D		W Wrench flat		N		E		N1		I	
	in	mm	in	in	mm	in	mm	in	mm	in	mm	in	mm	in	mm
TFE - 2 - 2P	1/8	3.17	Rc 1/8	0.09	2.28	1/2	12.7	0.71	18.03	0.97	24.64	0.75	19.05	0.50	12.7
TFE - 2 - 4P	1/8	3.17	Rc 1/4	0.09	2.28	11/16	17.5	0.82	20.80	1.08	27.43	0.94	23.75	0.50	12.7
TFE - 3 - 2P	3/16	4.76	Rc 1/8	0.12	30.4	1/2	12.7	0.74	18.80	1.00	25.40	0.75	19.05	0.54	13.7
TFE - 4 - 2P	1/4	6.35	Rc 1/8	0.19	4.82	1/2	12.7	0.77	19.55	1.06	26.92	0.75	19.05	0.60	15.3
TFE - 4 - 4P	1/4	6.35	Rc 1/4	0.19	7.82	11/16	17.5	0.88	22.40	1.17	29.72	0.88	22.40	0.60	15.3
TFE - 4 - 6P	1/4	6.35	Rc 3/8	0.19	7.82	13/16	20.6	0.96	24.38	1.25	31.75	0.88	22.40	0.60	15.3
TFE - 4 - 8P	1/4	6.35	Rc 1/2	0.19	7.82	1	25.4	1.07	27.18	1.36	34.54	1.12	28.45	0.60	15.3
TFE - 5 - 2P	5/16	7.93	Rc 1/8	0.25	6.35	9/16	14.3	0.84	21.30	1.13	28.70	0.75	19.05	0.64	16.2
TFE - 5 - 4P	5/16	7.93	Rc 1/4	0.25	6.35	11/16	17.5	0.91	23.11	1.20	30.48	0.88	22.40	0.64	16.2
TFE - 6 - 2P	3/8	9.52	Rc 1/8	0.28	7.11	5/8	15.9	0.91	23.11	1.20	30.48	0.75	19.05	0.66	16.9
TFE - 6 - 4P	3/8	9.52	Rc 1/4	0.28	7.11	11/16	17.5	0.88	22.40	1.23	31.24	0.88	22.40	0.66	16.9
TFE - 6 - 6P	3/8	9.52	Rc 3/8	0.28	7.11	13/16	20.6	1.02	25.90	1.31	33.27	0.88	22.40	0.66	16.9
TFE - 6 - 8P	3/8	9.52	Rc 1/2	0.28	7.11	1	25.4	1.12	28.45	1.42	36.07	1.12	28.45	0.66	16.9
TFE - 8 - 4P	1/2	12.70	Rc 1/4	0.41	10.41	13/16	20.6	1.02	25.90	1.42	36.07	0.88	22.40	0.90	22.9
TFE - 8 - 6P	1/2	12.70	Rc 3/8	0.41	10.41	13/16	20.6	1.02	25.90	1.42	36.07	0.88	22.40	0.90	22.9
TFE - 8 - 8P	1/2	12.70	Rc 1/2	0.41	10.41	1	25.4	1.12	28.44	1.53	38.86	1.13	28.70	0.90	22.9
TFE - 10 - 6P	5/8	15.87	Rc 3/8	0.50	12.70	15/16	23.8	1.10	27.90	1.50	38.10	0.88	22.40	0.96	24.4
TFE - 10 - 8P	5/8	15.87	Rc 1/2	0.50	12.70	1-1/16	27.0	1.17	29.70	1.57	39.86	1.12	28.45	0.96	24.4
TFE - 12 - 8P	3/4	19.05	Rc 1/2	0.62	15.74	1-1/16	27.0	1.17	29.70	1.57	39.86	1.12	28.45	0.96	24.5
TFE - 12 - 12P	3/4	19.05	Rc 3/4	0.62	15.74	1-3/8	34.9	1.25	31.75	1.76	44.70	1.25	31.75	0.96	24.5
TFE - 14 - 12P	7/8	22.22	Rc 3/4	0.72	18.28	1-3/8	34.9	1.25	31.75	1.76	44.70	1.25	31.75	1.02	25.9
TFE - 16 - 12P	1	25.40	Rc 3/4	0.88	22.35	1-3/8	34.9	1.25	31.75	1.93	49.02	1.25	31.75	1.23	31.2
TFE - 16 - 16P	1	25.40	Rc 1	0.88	22.35	1-11/16	42.9	1.50	38.10	2.11	53.59	1.50	38.10	1.23	31.2

"D" - Dimension is minimum opening - dimensions are for reference only, and are subject to change without notice.

ADJUSTABLE ELBOW

TAE

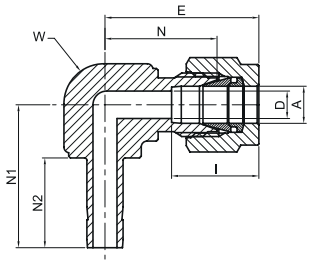

TUBE(METRIC) TO STUB(METRIC)								
Part Number	A Tube O.D.	D	W Wrench flat	N	E	N1	N2	I
	mm	mm	mm	mm	mm	mm	mm	mm
TAE - 3M	3	1.9	9.5	15.7	22.3	20.5	13.5	12.9
TAE - 4M	4	2.2	12.7	18.8	25.4	23.5	14.2	13.7
TAE - 6M	6	4.1	12.7	19.6	27.0	25.0	15.7	15.3
TAE - 8M	8	5.6	14.3	21.3	28.8	27.2	16.9	16.2
TAE - 10M	10	7.1	17.5	23.9	31.5	29.5	17.6	17.2
TAE - 12M	12	8.8	20.6	25.9	36.0	36	23.3	22.8
TAE - 15M	15	11.2	23.8	28.7	38.8	41.6	24.7	24.4
TAE - 16M	16	12.0	23.8	28.7	38.8	41.8	24.7	24.4
TAE - 18M	18	13.9	27.0	28.7	39.8	42.6	24.7	24.4
TAE - 20M	20	15.5	30.0	32.5	42.6	47.2	26.6	26.0

TUBE(INCH) TO TUBE(INCH)										
Part Number	A Tube O.D.		D	W Wrench flat		N	E	N1	N2	I
	mm		mm	mm		mm	mm	mm	mm	mm
TAE - 1	1/16	1.58	0.76	3/8	9.52	14.00	8.63	16.00	8.9	8.6
TAE - 2	1/8	3.17	2.03	3/8	9.52	15.74	12.70	20.59	13.5	12.7
TAE - 3	3/16	4.76	3.04	1/2	12.70	17.78	13.71	22.48	14.2	13.7
TAE - 4	1/4	6.35	4.32	1/2	12.70	19.55	15.24	25.00	15.7	15.32
TAE - 5	5/16	7.93	5.59	9.16	14.28	21.33	16.25	27.08	16.9	16.3
TAE - 6	3/8	9.52	6.86	5/8	15.87	23.11	16.76	26.00	17.5	16.9
TAE - 8	1/2	12.70	9.40	13/16	20.63	25.90	22.86	37.30	23.3	22.9
TAE - 10	5/8	15.87	11.94	15/16	23.80	28.70	24.38	41.75	24.7	24.4
TAE - 12	3/4	19.05	14.73	1-1/16	26.98	29.71	24.38	42.60	24.7	24.5
TAE - 14	7/8	22.22	18.28	1/3/16	30.00	34.54	25.9	49.39	26.6	25.9
TAE - 16	1	25.40	20.32	1/3/8	34.92	36.83	31.24	55.60	33	31.2

"D" - Dimension is minimum opening - dimensions are for reference only, and are subject to change without notice.

MALE RUN TEE

TMRT

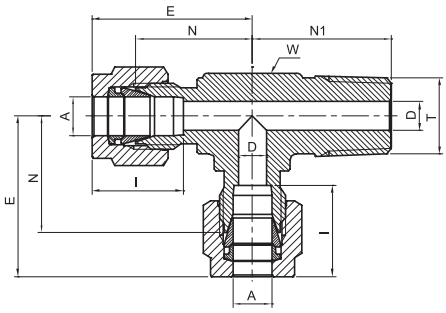

TUBE (METRIC) TO MALE NPT THREAD									
Part Number	A Tube O.D.	T NPT	D	W Wrench flat		N	E	N1	I
	mm	in	mm	in	mm	mm	mm	mm	mm
TMRT - 3M - 2N	3	1/8	2.4	1/2	12.7	17.0	23.6	17.8	12.9
TMRT - 3M - 4N	3	1/4	2.4	1/2	12.7	18.0	24.6	23.4	12.9
TMRT - 4M - 2N	4	1/8	2.4	1/2	12.7	18.8	25.4	18.8	13.7
TMRT - 6M - 2N	6	1/8	4.8	1/2	12.7	19.6	27.0	18.8	15.3
TMRT - 6M - 4N	6	1/4	4.8	1/2	12.7	19.6	27.0	23.4	15.3
TMRT - 8M - 2N	8	1/8	4.8	5/8	15.9	22.4	29.9	20.8	16.2
TMRT - 8M - 4N	8	1/4	6.4	5/8	15.9	22.4	29.9	25.4	16.2
TMRT - 10M - 4N	10	1/4	7.1	13/16	20.6	25.9	33.5	28.2	17.2
TMRT - 10M - 6N	10	3/8	7.9	11/16	17.5	23.9	31.5	28.2	17.2
TMRT - 12M - 4N	12	1/4	7.1	13/16	20.6	25.9	36.0	28.2	22.8
TMRT - 12M - 6N	12	3/8	9.5	13/16	20.6	25.9	36.0	28.2	22.8
TMRT - 12M - 8N	12	1/2	9.5	13/16	20.6	25.9	36.0	33.0	22.8
TMRT - 16M - 6N	16	3/8	9.5	15/16	23.8	27.9	38.0	30.2	24.4
TMRT - 16M - 8N	16	1/2	11.9	15/16	23.8	27.9	38.0	35.1	24.4
TMRT - 20M - 12N	20	3/4	15.9	1-3/8	34.9	34.5	44.6	41.7	26.0

TUBE (INCH) TO MALE NPT THREAD															
Part Number	A Tube O.D.		T NPT	D		W Wrench flat		N		E		N1		I	
	in	mm	in	in	mm	in	mm	in	mm	in	mm	in	mm	in	mm
TMRT - 2 - 2N	1/8	3.17	1/8	0.09	2.28	7/16	11.1	0.67	17.02	0.93	23.62	0.70	17.78	0.50	12.7
TMRT - 2 - 4N	1/8	3.17	1/4	0.09	2.28	1/2	12.7	0.71	18.03	0.97	24.64	0.92	23.40	0.50	12.7
TMRT - 3 - 2N	3/16	4.76	1/8	0.12	3.05	7/16	11.1	0.70	17.78	0.96	24.38	0.70	17.78	0.54	13.7
TMRT - 4 - 2N	1/4	6.35	1/8	0.19	4.82	1/2	12.7	0.77	19.56	1.06	26.92	0.74	18.80	0.60	15.3
TMRT - 4 - 4N	1/4	6.35	1/4	0.19	4.82	1/2	12.7	0.77	19.56	1.06	26.92	0.92	23.37	0.60	15.3
TMRT - 5 - 2N	5/16	7.93	1/8	0.19	4.82	5/8	15.9	0.88	22.35	1.17	29.71	0.82	20.83	0.64	16.2
TMRT - 6 - 4N	3/8	9.52	1/4	0.28	7.11	5/8	15.9	0.91	23.11	1.20	30.48	1.00	25.40	0.66	16.9
TMRT - 6 - 6N	3/8	9.52	3/8	0.28	7.11	13/16	20.6	1.02	25.91	1.31	33.27	1.11	28.19	0.66	16.9
TMRT - 8 - 6N	1/2	12.70	3/8	0.38	9.50	13/16	20.6	1.02	25.91	1.42	36.07	1.11	28.19	0.90	22.9
TMRT - 8 - 8N	1/2	12.70	1/2	0.41	10.41	13/16	20.6	1.02	25.91	1.42	36.07	1.30	33.00	0.90	22.9
TMRT - 10 - 8N	5/8	15.87	1/2	0.47	11.94	15/16	23.8	1.10	27.94	1.50	38.10	1.38	35.05	0.96	24.4
TMRT - 12 - 12N	3/4	19.05	3/4	0.62	15.75	1-1/16	27.0	1.17	29.72	1.57	39.88	1.45	36.83	0.96	24.5

"D" - Dimension is minimum opening - dimensions are for reference only, and are subject to change without notice.

FEMALE RUN TEE

TFRT

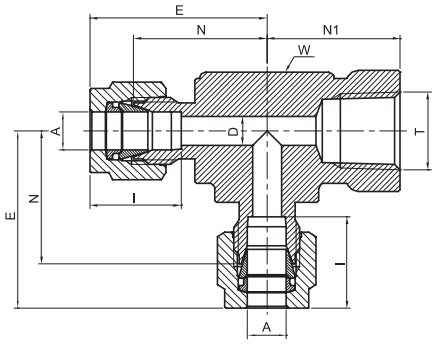

TUBE (METRIC) TO FEMALE NPT THREAD									
Part Number	A Tube O.D.	T NPT	D	W Wrench flat		N	E	N1	I
	mm	in	mm	in	mm	mm			mm
TFRT - 6M - 2N	6	1/8	4.8	1/2	12.7	19.6	27.0	19.0	15.3
TFRT - 6M - 4N	6	1/4	4.8	11/16	17.5	22.4	29.8	22.4	15.3
TFRT - 6M - 8N	6	1/2	4.8	1	25.4	27.2	34.5	28.4	15.3
TFRT - 8M - 2N	8	1/8	6.4	5/8	15.9	22.4	29.9	19.0	16.2
TFRT - 8M - 4N	8	1/4	6.4	11/16	17.5	23.1	30.6	22.4	16.2
TFRT - 8M - 6N	8	3/8	6.4	13/16	20.6	25.2	32.4	22.4	16.2
TFRT - 8M - 8N	8	1/2	6.4	1	25.4	28	35.2	28.4	16.2
TFRT - 10M - 4N	10	1/4	7.9	11/16	17.5	25	32.6	22.4	17.2
TFRT - 12M - 4N	12	1/4	9.5	13/16	20.6	25.9	36.0	22.4	22.8
TFRT - 12M - 6N	12	3/8	9.5	13/16	20.6	25.9	36.0	22.4	22.8
TFRT - 12M - 8N	12	1/2	9.5	1	25.4	28.7	38.8	28.4	22.8
TFRT - 16M - 8N	16	1/2	12.7	1	25.4	29.7	39.5	28.4	24.4

TUBE (INCH) TO FEMALE NPT THREAD															
Part Number	A Tube O.D.		T NPT	D		W Wrench flat		N		E		N1		I	
	in	mm	in	in	mm	in	mm	in	mm	in	mm	in	mm	in	mm
TFRT - 2 - 2N	1/8	3.17	1/8	0.09	2.28	1/2	12.70	0.71	18.00	0.97	24.44	0.75	19.05	0.50	12.70
TFRT - 4 - 2N	1/4	6.35	1/8	0.19	4.82	1/2	12.70	0.77	19.55	1.06	26.92	0.75	19.05	0.60	15.30
TFRT - 4 - 4N	1/4	6.35	1/4	0.19	4.82	11/16	17.50	0.88	22.35	1.17	29.71	0.88	22.35	0.60	15.30
TFRT - 6 - 4N	3/8	9.52	1/4	0.28	7.11	11/16	17.50	0.94	23.87	1.23	31.24	0.88	22.35	0.60	16.90
TFRT - 8 - 6N	1/2	12.70	3/8	0.41	10.41	13/16	20.60	1.02	25.90	1.42	36.07	0.88	22.35	0.90	22.90
TFRT - 8 - 8N	1/2	12.70	1/2	0.41	10.41	1-1/16	27.00	1.17	29.72	1.57	39.88	1.12	28.45	0.90	22.90
TFRT - 12 - 12N	3/4	19.05	3/4	0.62	15.75	1-3/8	34.90	1.36	34.54	1.76	44.70	1.25	31.75	0.90	24.50
TFRT - 16 - 12N	1	25.40	3/4	19.05	22.35	1-3/8	34.90	1.45	36.83	1.93	49.02	1.25	31.75	1.23	31.24
TFRT - 16 - 16N	1	25.40	1	25.40	22.35	1-11/16	42.86	1.63	41.40	2.11	53.59	1.50	38.10	1.23	31.24

"D" - Dimension is minimum opening - dimensions are for reference only, and are subject to change without notice.

MALE BRANCH TEE

TMBT

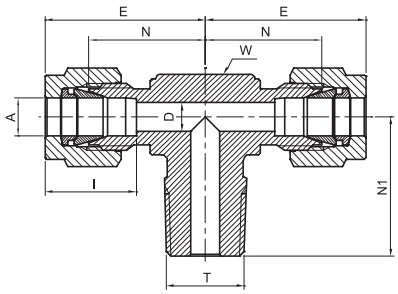

TUBE (METRIC) TO MALE NPT THREAD									
Part Number	A Tube O.D.	T NPT	D	W Wrench flat		N	E	N1	I
	mm	in	mm	in	mm	mm	mm	mm	mm
TMBT - 3M - 2N	3	1/8	2.4	1/2	12.7	17.0	23.6	17.8	12.9
TMBT - 3M - 4N	3	1/4	2.4	1/2	12.7	18.0	24.6	23.4	12.9
TMBT - 4M - 2N	4	1/8	2.4	1/2	12.7	18.8	25.4	18.8	13.7
TMBT - 6M - 2N	6	1/8	4.8	1/2	12.7	19.6	27.0	18.8	15.3
TMBT - 6M - 4N	6	1/4	4.8	1/2	12.7	19.6	27.0	23.4	15.3
TMBT - 8M - 2N	8	1/8	4.8	5/8	15.9	22.4	29.9	20.8	16.2
TMBT - 8M - 4N	8	1/4	6.4	5/8	15.9	22.4	29.9	25.4	16.2
TMBT - 10M - 4N	10	1/4	7.1	13/16	20.6	25.9	33.5	28.2	17.2
TMBT - 10M - 6N	10	3/8	7.9	11/16	17.5	23.9	31.5	28.2	17.2
TMBT - 12M - 4N	12	1/4	7.1	13/16	20.6	25.9	36.0	28.2	22.8
TMBT - 12M - 6N	12	3/8	9.5	13/16	20.6	25.9	36.0	28.2	22.8
TMBT - 12M - 8N	12	1/2	9.5	13/16	20.6	25.9	36.0	33.0	22.8
TMBT - 16M - 6N	16	3/8	9.5	15/16	23.8	27.9	38.0	30.2	24.4
TMBT - 16M - 8N	16	1/2	11.9	15/16	23.8	27.9	38.0	35.1	24.4
TMBT - 20M - 12N	20	3/4	15.9	1-3/8	34.9	34.5	44.6	41.7	26.0

TUBE (INCH) TO MALE NPT THREAD															
Part Number	A Tube O.D.		T NPT	D		W Wrench flat		N		E		N1		I	
	in	mm	in	in	mm	in	mm	in	mm	in	mm	in	mm	in	mm
TMBT - 2 - 2N	1/8	3.17	1/8	0.09	2.28	7/16	11.1	0.67	17.02	0.93	23.62	0.70	17.78	0.50	12.7
TMBT - 2 - 4N	1/8	3.17	1/4	0.09	2.28	1/2	12.7	0.71	18.03	0.97	24.64	0.92	23.37	0.50	12.7
TMBT - 3 - 2N	3/16	4.76	1/8	0.12	3.04	7/16	11.1	0.70	17.78	0.96	24.38	0.70	17.78	0.54	13.7
TMBT - 4 - 2N	1/4	6.35	1/8	0.19	4.82	1/2	12.7	0.77	19.56	1.06	26.90	0.74	18.80	0.60	15.3
TMBT - 4 - 4N	1/4	6.35	1/4	0.19	4.82	1/2	12.7	0.77	19.56	1.06	26.90	0.92	23.87	0.60	15.3
TMBT - 5 - 2N	5/16	7.93	1/8	0.19	4.82	5/8	15.9	0.88	22.35	1.17	29.71	0.82	20.83	0.64	16.2
TMBT - 6 - 4N	3/8	9.52	1/4	0.28	7.11	5/8	15.9	0.91	23.11	1.20	30.48	1.00	25.40	0.66	16.9
TMBT - 6 - 6N	3/8	9.52	3/8	0.28	7.11	13/16	20.6	1.02	25.91	1.31	33.27	1.11	28.19	0.66	16.9
TMBT - 8 - 6N	1/2	12.70	3/8	0.38	9.65	13/16	20.6	1.02	25.91	1.42	36.07	1.11	28.19	0.90	22.9
TMBT - 8 - 8N	1/2	12.70	1/2	0.41	10.41	13/16	20.6	1.02	25.96	1.42	36.07	1.30	33.02	0.90	22.9
TMBT - 10 - 8N	5/8	15.87	1/2	0.47	11.94	1	25.4	1.13	28.70	1.53	38.86	1.41	35.80	0.96	24.4
TMBT - 12 - 12N	3/4	19.05	3/4	0.62	15.75	1-1/16	27.0	1.17	29.72	1.57	39.88	1.45	36.83	0.96	24.5

"D" - Dimension is minimum opening - dimensions are for reference only, and are subject to change without notice.

FEMALE BRANCH TEE

TFBT

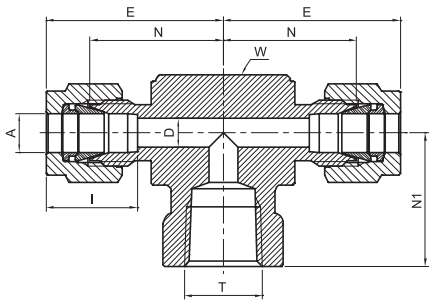

TUBE (METRIC) TO FEMALE NPT THREAD									
Part Number	A Tube O.D.	T NPT	D	W Wrench flat		N	E	N1	I
	mm	in	mm	in	mm	mm	mm	mm	mm
TFBT - 6M - 2N	6	1/8	4.8	1/2	12.7	19.6	27.0	19.0	15.3
TFBT - 6M - 4N	6	1/4	4.8	11/16	17.5	22.4	29.8	22.4	15.3
TFBT - 6M - 6N	6	3/8	4.8	13/16	20.6	24.4	31.7	22.4	15.3
TFBT - 6M - 8N	6	1/2	4.8	1	25.4	27.2	34.5	28.4	15.3
TFBT - 8M - 2N	8	1/8	6.4	5/8	15.9	23.1	29.9	19.0	16.2
TFBT - 8M - 4N	8	1/4	6.4	11/16	17.5	23.1	30.6	22.4	16.2
TFBT - 8M - 6N	8	3/8	6.4	13/16	20.6	25.2	32.4	22.4	16.2
TFBT - 8M - 8N	8	1/2	6.4	1	25.4	28.0	35.2	28.4	16.2
TFBT - 10M - 4N	10	1/4	7.9	13/16	20.6	25.9	33.5	22.4	17.2
TFBT - 10M - 6N	10	3/8	7.9	13/16	20.6	25.9	33.5	22.4	17.2
TFBT - 10M - 8N	10	1/2	7.9	1	25.4	28.7	36.1	22.4	17.2
TFBT - 12M - 4N	12	1/4	9.5	13/16	20.6	25.9	36.0	22.4	22.8
TFBT - 12M - 6N	12	3/8	9.5	13/16	20.6	25.9	36.0	22.4	22.8
TFBT - 12M - 8N	12	1/2	9.5	1	25.4	28.7	38.8	28.4	22.8
TFBT - 16M - 8N	16	1/2	12.7	1	25.4	28.7	38.8	28.4	24.4

TUBE (INCH) TO FEMALE NPT THREAD															
Part Number	A Tube O.D.		T NPT	D		W Wrench flat		N		E		N1		I	
	in	mm	in	in	mm	in	mm	in	mm	in	mm	in	mm	in	mm
TFBT - 2 - 2N	1/8	3.17	1/8	0.09	2.28	1/2	12.7	0.70	18.00	0.97	24.64	0.75	19.05	0.50	12.7
TFBT - 4 - 2N	1/4	6.35	1/8	0.19	4.82	1/2	12.7	0.77	19.56	1.06	26.96	0.75	19.05	0.60	15.3
TFBT - 4 - 4N	1/4	6.35	1/4	0.19	4.82	11/16	17.5	0.88	22.35	1.17	29.71	0.88	22.35	0.60	15.3
TFBT - 6 - 4N	3/8	9.52	1/4	0.28	7.11	11/16	17.5	0.94	23.88	1.23	31.24	0.88	22.35	0.66	16.9
TFBT - 8 - 4N	1/2	12.70	1/4	0.41	10.41	13/16	20.6	1.02	25.90	1.42	36.07	0.88	22.35	0.90	22.9
TFBT - 8 - 6N	1/2	12.70	3/8	0.41	10.41	13/16	20.6	1.02	25.90	1.42	36.07	0.88	22.35	0.90	22.9
TFBT - 8 - 8N	1/2	12.70	1/2	0.41	10.41	1-1/8	25.4	25.4	28.70	1.53	38.86	1.12	28.45	0.90	22.9
TFBT - 10 - 8N	5/8	15.87	1/2	0.50	12.70	1-1/8	25.4	25.4	28.70	1.53	38.86	1.12	28.44	0.96	24.4
TFBT - 12 - 12N	3/4	19.05	3/4	0.62	15.74	1-3/8	34.9	1.36	34.50	1.76	44.70	1.25	31.75	0.96	24.5
TFBT - 16 - 12N	1	25.40	3/4	0.88	22.35	1-3/8	34.9	1.45	36.83	1.93	49.02	1.25	31.75	1.23	31.2
TFBT - 16 - 16N	1	25.40	1	0.88	22.35	1-11/16	42.9	1.63	41.40	2.11	53.60	1.50	38.10	1.23	31.2

"D" - Dimension is minimum opening - dimensions are for reference only, and are subject to change without notice.

BULKHEAD UNION

TBU

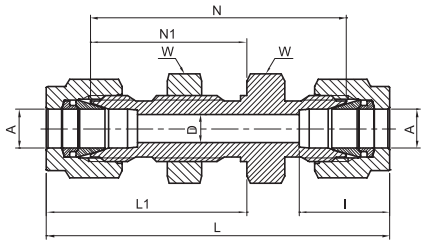

TUBE (METRIC) TO TUBE (METRIC)										
Part Number	A Tube O.D.	D	W Hex. flat	N	N1	L	L1	I	Panel hole drill size	Max. panel thickness
	mm	mm	mm	mm	mm	mm	mm	mm	mm	mm
TBU - 3M	3	2.4	14	38.1	24.6	51.3	31.2	12.9	8.3	12.7
TBU - 4M	4	2.4	14	40.4	25.4	53.6	32.0	13.7	9.9	12.7
TBU - 6M	6	4.8	16	42.9	26.2	57.7	33.6	15.3	11.5	10.2
TBU - 8M	8	6.4	18	46	28.6	61.0	36.1	16.2	13.1	11.2
TBU - 10M	10	7.9	22	48.5	29.4	63.7	37.0	17.2	16.25	11.2
TBU - 12M	12	9.5	24	50.8	31.8	71.0	41.9	22.8	19.5	12.7
TBU - 15M	15	11.9	27	52.3	32.5	72.5	42.6	24.4	22.8	12.7
TBU - 16M	16	12.7	27	52.3	32.5	72.5	42.6	24.4	22.8	12.7
TBU - 18M	18	15.1	30	58.7	37.3	78.9	47.4	24.4	26.0	16.8
TBU - 20M	20	15.9	35	64.3	42.9	84.5	53.0	26.0	29.0	23.9
TBU - 22M	22	18.3	35	64.3	42.9	84.5	53.0	26.0	29.0	19.1
TBU - 25M	25	21.8	41	71.4	45.2	95.9	57.5	31.3	33.7	19.0
TBU - 32M	32	28.6	50	82.3	49.5	128.3	72.5	42.0	42.5	19.0
TBU - 38M	38	33.7	60	89.4	51.5	144.6	79.1	49.4	50.5	19.0

TUBE (INCH) TO TUBE (INCH)																				
Part Number	A Tube O.D.		D		W Hex. flat		N		N1		L		L1		I		Panel hole drill size		Max. panel thickness	
	in	mm	in	mm	in	mm	in	mm	in	mm	in	mm	in	mm	in	mm	in	mm	in	mm
TBU - 1	1/16	1.58	0.05	1.27	5/16	7.9	0.94	23.88	0.53	13.46	1.24	31.5	0.68	17.3	0.34	8.6	13/64	5.16	0.12	3.05
TBU - 2	1/8	3.17	0.09	2.28	1/2	12.7	1.5	38.1	0.97	24.63	2.02	51.3	1.23	31.24	0.5	12.7	21/64	8.33	0.5	12.7
TBU - 3	3/16	4.76	0.12	3.04	9/16	14.3	1.59	40.38	1	25.4	2.11	53.59	1.26	32	0.54	13.7	25/64	9.92	0.5	12.7
TBU - 4	1/4	6.35	0.19	4.82	5/8	15.9	1.69	42.92	1.03	26.16	2.27	57.65	1.32	33.52	0.6	15.3	29/64	11.5	0.4	10.16
TBU - 5	5/16	7.93	0.25	6.35	11/16	17.5	1.81	45.97	1.12	28.44	2.39	60.7	1.41	35.81	0.64	16.2	33/64	13.09	0.44	11.17
TBU - 6	3/8	9.52	0.28	7.11	3/4	19.1	1.87	47.5	1.16	29.46	2.45	62.2	1.45	36.83	0.66	16.9	37/64	14.68	0.44	11.17
TBU - 8	1/2	12.7	0.41	10.41	15/16	23.8	2	50.2	1.25	31.75	2.8	71.12	1.65	41.91	0.9	22.9	49/64	19.44	0.5	12.7
TBU - 10	5/8	15.87	0.5	12.7	1-1/16	27	2.06	52.32	1.28	32.51	2.86	72.64	1.68	42.67	0.96	24.4	57/64	22.62	0.5	12.7
TBU - 12	3/4	19.05	0.62	15.9	1-3/16	30.2	2.31	58.67	1.47	37.33	3.11	78.99	1.87	47.49	0.96	24.5	1-1/64	25.79	0.66	16.76
TBU - 16	1	25.4	0.88	22.35	1-5/8	41.3	2.81	71.37	1.78	45.21	3.77	95.76	2.26	57.4	1.23	31.2	1-21/64	33.73	0.75	19.05
TBU - 20	1-1/4	31.75	1.09	27.7	1-7/8	47.6	3.11	79	1.88	47.75	4.85	123.19	2.75	69.85	1.62	41.2	1-41/64	41.67	0.75	19.05
TBU - 24	1-1/2	38.1	1.34	34	2-1/4	57.2	3.34	84.8	1.94	49.28	5.48	139.19	3.01	76.45	1.97	50	1-61/64	49.61	0.75	19.05
TBU - 32	2	50.8	1.81	45.97	2-3/4	69.9	4.16	105.66	2.22	56.39	7.1	180.34	3.69	93.73	2.66	67.6	2-41/64	67.07	0.75	19.05

"D" - Dimension is minimum opening - dimensions are for reference only, and are subject to change without notice.

BULKHEAD FEMALE CONNECTOR

TBFC

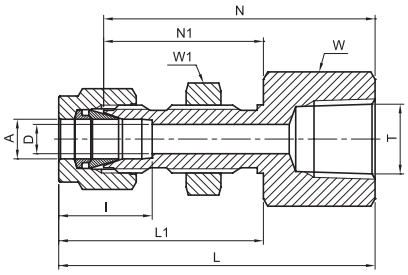

TUBE (INCH) TO MALE NPT THREAD																							
Part Number	A Tube O.D.		T	D		W Hex. flat		W1 Hex. flat		N		N1		L		L1		I		Panel hole drill size		Max. panel thickness	
	in	mm	in	in	mm	in	mm	in	mm	in	mm	in	mm	in	mm	in	mm	in	mm	in	mm	in	mm
TBFC - 2 - 2N	1/8	3.17	1/8	.09	2.28	9/16	14.3	1/2	12.7	1.50	38.10	0.97	24.63	1.76	44.70	1.23	31.24	0.50	12.7	21/64	8.33	0.50	12.70
TBFC - 4 - 2N	1/4	6.35	1/8	.19	4.82	5/8	15.9	5/8	15.9	1.56	39.62	1.03	26.16	1.85	46.99	1.32	33.52	0.60	15.3	29/64	11.50	0.40	10.16
TBFC - 4 - 4N	1/4	6.35	1/4	.19	4.82	3/4	19.1	5/8	15.9	1.75	44.45	1.03	26.16	2.04	51.81	1.32	33.52	0.60	15.3	29/64	11.50	0.40	10.16
TBFC - 6 - 4N	3/8	9.52	1/4	.28	7.11	3/4	19.1	3/4	19.1	1.88	47.75	1.16	29.46	2.17	55.11	1.45	36.83	0.66	16.9	37/64	14.68	0.44	11.17
TBFC - 8 - 6N	1/2	12.70	3/8	.41	10.41	15/16	23.8	15/16	23.8	2.03	51.56	1.25	31.75	2.43	61.72	1.65	41.91	0.90	22.9	49/64	19.44	0.50	12.70
TBFC - 8 - 8N	1/2	12.70	1/2	.41	10.41	1-1/16	27.0	15/16	23.8	2.22	56.38	1.25	31.75	2.62	66.54	1.65	41.91	0.90	22.9	49/64	19.44	0.50	12.70
TBFC - 12 - 12N	3/4	19.05	3/4	.62	15.74	15/16	23.81	1-5/16	33.33	2.50	63.60	1.51	38.30	2.89	73.51	2.89	47.21	0.96	24.38	1-1/64	25.79	0.66	16.76

BULKHEAD REDUCER

TBR

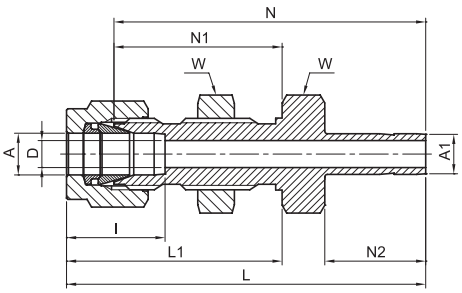

TUBE (INCH) TO SUB (INCH)																			
Part Number	A Tube O.D.		A1 Tube O.D.	D		W Hex. flat		N		N1		N2		L		L1		I	
	in	mm	in	in	mm	in	mm	in	mm	in	mm	in	mm	in	mm	in	mm	in	mm
TBR - 2	1/8	3.17	1/8	0.08	2.03	1/2	12.70	1.69	42.92	0.97	24.63	0.53	13.46	1.95	49.53	1.23	31.24	0.50	12.7
TBR - 4	1/4	6.35	1/4	0.17	4.20	5/8	15.90	1.91	48.50	1.03	26.16	0.62	15.74	2.20	55.88	1.32	33.52	0.60	15.3
TBR - 6	3/8	9.52	3/8	0.28	7.11	3/4	19.10	2.12	53.85	1.16	29.46	0.69	17.52	2.41	61.21	1.45	36.83	0.66	16.9
TBR - 8	1/2	12.70	1/2	0.39	9.90	15/16	23.80	2.47	62.73	1.25	31.75	0.91	23.11	2.87	72.89	1.65	41.91	0.90	22.9
TBR - 12	3/4	19.05	3/4	0.62	15.90	1-3/16	26.93	2.81	71.45	1.47	37.33	0.97	24.70	3.21	81.53	1.87	47.49	0.96	24.5
TBR - 16	1	25.40	1	0.88	22.35	1-5/8	41.27	3.47	88.13	1.78	45.21	1.30	33.00	3.95	100.33	2.26	57.40	1.23	31.2

"D" - Dimension is minimum opening - dimensions are for reference only, and are subject to change without notice.

BULKHEAD MALE CONNECTOR

TBMC

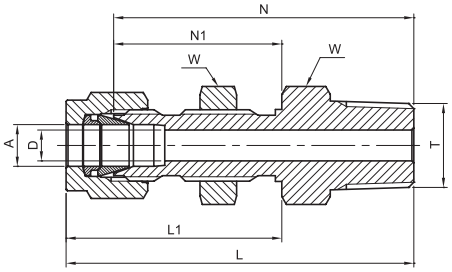

TUBE (METRIC) TO MALE NPT THREAD										
Part Number	A Tube O.D.	T NPT	D	W Hex. flat	N	N1	L	L1	Panel hole drill size	Max. panel thickness
	mm	in	mm	mm	mm	mm	mm	mm	mm	mm
TBMC - 6M - 2N	6	1/8	4.8	16	42.2	26.2	49.6	33.6	11.5	10.2
TBMC - 6M - 4N	6	1/4	4.8	16	46.2	26.2	53.6	33.6	11.5	10.2
TBMC - 12M - 8N	12	1/2	9.5	24	58.7	31.8	68.8	41.9	19.5	12.7

15.74TUBE (INCH) TO MALE NPT THREAD																				
Part Number	A Tube O.D.		T NPT	D		W Hex. flat		N		N1		L		L1		Panel hole drill size		Max. panel thickness	
	in	mm	in	in	mm	in	mm	in	mm	in	mm	in	mm	in	mm	in	mm	in	mm
TBMC - 2 - 2N	1/8	3.17	1/8	0.09	2.28	1/2	12.7	1.57	39.90	0.97	24.60	1.83	46.48	1.23	31.24	21/64	8.33	0.50	12.70
TBMC - 4 - 2N	1/4	6.35	1/8	0.19	4.82	5/8	15.9	1.66	12.20	1.03	26.20	1.95	49.53	1.32	33.52	29/64	11.50	0.40	10.16
TBMC - 4 - 4N	1/4	6.35	1/4	0.19	4.82	5/8	15.9	1.84	46.70	1.03	26.16	2.13	54.10	1.32	33.52	29/64	11.50	0.40	10.16
TBMC - 6 - 4N	3/8	9.52	1/4	0.28	7.11	3/4	19.1	1.97	50.00	1.16	29.46	2.26	57.40	1.45	36.83	37/64	14.68	0.44	11.17
TBMC - 8 - 6N	1/2	12.70	3/8	0.40	10.40	15/16	23.8	2.09	53.10	1.25	31.75	2.49	83.25	1.65	41.91	49/64	19.44	0.50	12.70
TBMC - 8 - 8N	1/2	12.70	1/2	0.40	10.40	15/16	23.8	2.31	58.70	1.25	31.70	2.71	68.83	1.65	41.91	49/64	19.44	0.50	12.70
TBMC - 12 - 12N	3/4	19.05	3/4	0.62	15.74	1-3/16	30.16	2.60	66.04	1.47	37.33	3.00	76.20	1.87	47.49	1-1/64	25.76	0.66	16.76
TBMC - 16 - 16N	1	25.40	1	0.88	22.35	1-5/8	41.27	3.19	81.02	1.78	45.21	3.67	93.21	2.26	57.40	1-21/64	33.73	0.75	19.05

BULKHEAD RETAINER

TBRE

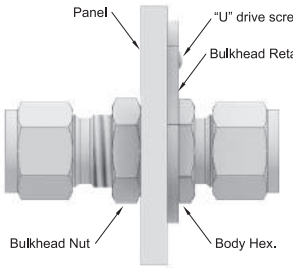

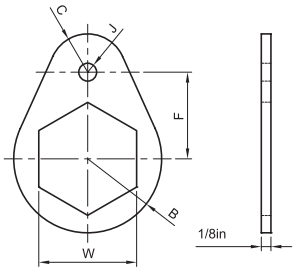

Part Number	Tube O.D.		F	W	B	C	J	Drill Hole Dia	"U" Drive Screw	Drill Number
	in	mm								
TBRE - 1	1/16	-	9.52	7.93	7.93	3.97	3.97	3.0	6-3/8	31
TBRE - 2	1/8	-	12.70	12.70	10.32	5.56				
TBRE - 3	3/16	3, 4	14.28	14.28	11.91	6.35				
TBRE - 4	1/4	6	15.87	15.87	12.70	7.14				
TBRE - 5	5/16	-	17.46	17.46	14.28	7.93				
TBRE - 6	3/8	-	19.05	19.05	15.87	8.73				
TBRE - 8	1/2	12	23.81	23.81	19.05	10.32				
TBRE - 10	5/8	15, 16	25.40	26.98	20.64	10.23	5.56	3.66	10-1/2	27
TBRE - 12	3/4	18	26.98	30.16	23.02	11.91				
TBRE - 14	7/8	20	30.20	34.93	27.80	13.49				
TBRE - 16	1	-	32.54	41.27	29.37	13.49				

"D" - Dimension is minimum opening - dimensions are for reference only, and are subject to change without notice.

UNION CROSS

TUC

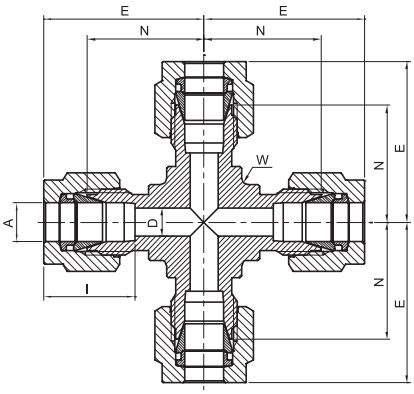

ALL TUBES (METRIC)							
Part Number	A Tube O.D.	D	W Wrench flat		N	E	I
	mm	mm	in	mm	mm	mm	mm
TUC - 3M	3	2.4	3/8	9.5	15.7	22.3	12.9
TUC - 6M	6	4.8	1/2	12.7	19.6	27.0	15.3
TUC - 8M	8	6.4	5/8	15.9	22.4	29.9	16.2
TUC - 10M	10	7.9	13/16	20.6	25.9	33.5	17.2
TUC - 12M	12	9.5	13/16	20.6	25.9	36.0	22.8
TUC - 18M	18	15.1	1-1/16	27.0	28.2	38.3	24.4
TUC - 20M	20	15.9	1-3/8	34.9	34.5	44.6	26.0
TUC - 25M	25	21.8	1-3/8	34.9	36.8	49.1	31.3

ALL TUBES (INCH)												
Part Number	A Tube O.D.		D		W Wrench flat		N		E		I	
	in	mm	in	mm	in	mm	in	mm	in	mm	in	mm
TUC - 1	1/16	1.58	0.05	1.27	3/8	9.5	0.55	14	0.70	17.8	0.34	8.6
TUC - 2	1/8	3.17	0.09	2.28	3/8	9.5	0.62	15.74	0.88	22.35	0.50	12.7
TUC - 4	1/4	6.35	0.19	4.82	1/2	12.7	0.77	19.60	1.06	26.92	0.60	15.3
TUC - 5	5/16	7.93	0.25	6.35	5/8	15.9	0.88	22.35	1.17	29.71	0.64	16.2
TUC - 6	3/8	9.52	0.28	7.11	5/8	15.9	0.91	23.11	1.20	30.48	0.66	16.9
TUC - 8	1/2	12.70	0.41	10.41	13/16	20.6	1.02	25.90	1.42	36.07	0.90	22.9
TUC - 12	3/4	19.05	0.62	15.74	1-1/6	27.0	1.17	29.72	1.57	39.88	0.96	24.5
TUC - 16	1	25.40	0.88	22.35	1-3/8	34.9	1.45	36.80	1.93	49.02	1.23	31.2

"D" - Dimension is minimum opening - dimensions are for reference only, and are subject to change without notice.

CAP

TC

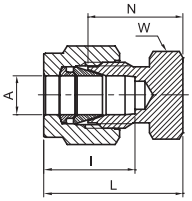

CAPPING END OF TUBE (METRIC)					
Part Number	A Tube O.D.	W Hex. flat	N	L	I
	mm	mm	mm	mm	mm
TC - 2M	2	12	13.5	20.1	12.9
TC - 3M	3	12	13.5	20.1	12.9
TC - 4M	4	12	14.7	21.3	13.7
TC - 6M	6	14	15.7	23.1	15.3
TC - 8M	8	15	17.0	24.5	16.2
TC - 10M	10	18	19.0	26.6	17.2
TC - 12M	12	22	19.0	29.1	22.8
TC - 15M	15	24	19.8	29.9	24.4
TC - 16M	16	24	19.8	29.9	24.4
TC - 18M	18	27	21.3	31.4	24.4
TC - 20M	20	30	23.9	34.0	26.0
TC - 22M	22	30	23.9	34.0	26.0
TC - 25M	25	35	26.2	38.5	31.3
TC - 28M	28	41	27.7	48.5	36.6
TC - 32M	32	46	32.8	55.8	42.0
TC - 38M	38	55	37.8	65.4	49.4

CAPPING END OF TUBE (INCH)										
Part Number	A Tube O.D.		W Hex. flat		N		L		I	
	in	mm	in	mm	in	mm	in	mm	in	mm
TC - 1	1/16	1.58	5/16	7.9	0.44	11.17	0.59	14.98	0.34	8.6
TC - 2	1/8	3.17	7/16	11.1	0.53	13.46	0.79	20.06	0.5	12.7
TC - 3	3/16	4.76	7/16	11.1	0.58	14.73	0.84	21.84	0.54	13.7
TC - 4	1/4	6.35	1/2	12.7	0.63	16	0.92	23.37	0.6	15.3
TC - 5	5/16	7.93	9/16	14.3	0.67	17.01	0.96	24.38	0.64	16.2
TC - 6	3/8	9.52	5/8	15.9	0.72	18.28	1.01	25.65	0.66	16.9
TC - 8	1/2	12.7	13/16	20.6	0.75	19.05	1.15	29.21	0.9	22.9
TC - 10	5/8	15.87	15/16	23.8	0.78	19.81	1.18	29.97	0.96	24.4
TC - 12	3/4	19.05	1-1/16	27	0.84	21.33	1.24	31.49	0.96	24.5
TC - 14	7/8	22.22	1-3/16	30.2	0.94	23.88	1.34	34.04	1.02	25.9
TC - 16	1	25.4	1-3/8	34.9	1.03	26.16	1.51	38.35	1.23	31.2
TC - 20	1-1/4	31.75	1-3/4	44.5	1.23	31.24	2.1	53.34	1.62	41.2
TC - 24	1-1/2	38.1	2-1/8	54.0	1.47	37.33	2.54	64.52	1.97	50.0
TC - 32	2	50.8	2-3/4	69.9	1.94	49.28	3.41	86.61	2.66	67.6

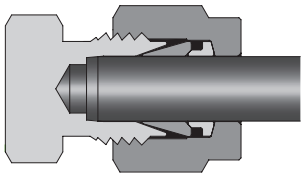

"D" - Dimension is minimum opening - dimensions are for reference only, and are subject to change without notice.
For 1/16, 1/8 and 3/16 in 2, 3 and 4mm tube fittings, tighten the nut 3/4 turn.

PLUG

TP

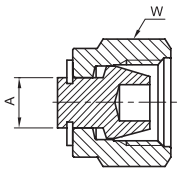

PLUGGING UNUSED PORT OF FITTING (METRIC)		
Part Number	A Tube O.D.	W Hex. flat
	mm	mm
TP - 3M	3	12
TP - 4M	4	12
TP - 6M	6	14
TP - 8M	8	16
TP - 10M	10	19
TP - 12M	12	22
TP - 15M	15	25
TP - 16M	16	25
TP - 18M	18	30
TP - 20M	20	32
TP - 22M	22	32
TP - 25M	25	38
TP - 28M	28	46
TP - 32M	32	50
TP - 38M	38	60
TP - 42M	42	65

PLUGGING UNUSED PORT OF FITTING (INCH)				
Part Number	A Tube O.D.		W Hex. flat	
	in	mm	in	mm
TP - 1	1/16	1.58	5/16	7.9
TP - 2	1/8	3.17	7/16	11.1
TP - 3	3/16	4.76	1/2	12.7
TP - 4	1/4	6.35	9/16	14.3
TP - 5	5/16	7.93	5/8	15.9
TP - 6	3/8	9.52	11/16	17.5
TP - 8	1/2	12.7	7/8	22.2
TP - 10	5/8	15.87	1	25.4
TP - 12	3/4	19.05	1-1/8	28.6
TP - 16	1	25.4	1-1/2	38.1
TP - 20	1-1/4	31.75	1-7/8	47.6
TP - 24	1-1/2	38.1	2-1/4	57.2
TP - 32	2	50.8	3	76.2

PLUG ASSEMBLY INSTRUCTIONS

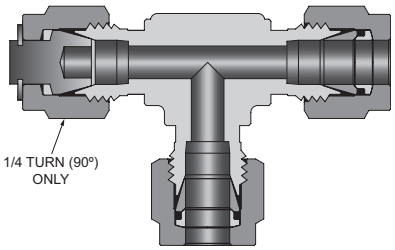

"D" - Dimension is minimum opening - dimensions are for reference only, and are subject to change without notice.
For 1/16, 1/8 and 3/16 in 2, 3 and 4mm tube fittings, tighten the plug 1/8 turn.
For over 1 in and over 25mm tube fittings, tighten the plug 1/4 turn.

FEMALE TUBE ADAPTER

TFTA

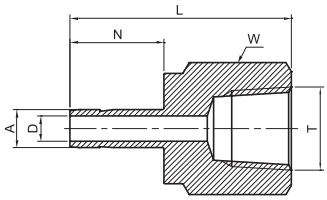

TUBE (METRIC) FEMALE PIPE						
Part Number	A Tube O.D.	T NPT	D	W Hex. flat	N	L
	mm	in	mm	mm	mm	mm
TFTA - 3M - 2N	3	1/8	2.1	14	13.5	31.5
TFTA - 3M - 4N	3	1/4	2.1	19	13.5	35.3
TFTA - 4M - 4N	4	1/4	2.2	19	14.2	35.0
TFTA - 6M - 2N	6	1/8	4.0	14	15.7	32.5
TFTA - 6M - 4N	6	1/4	4.0	19	15.7	36.5
TFTA - 6M - 6N	6	3/8	4.0	22	15.7	39.6
TFTA - 6M - 8N	6	1/2	4.0	27	15.7	45.5
TFTA - 8M - 2N	8	1/8	5.6	14	16.9	34.3
TFTA - 8M - 4N	8	1/4	5.6	19	16.9	37.6
TFTA - 8M - 8N	8	1/2	5.6	27	16.9	46.0
TFTA - 10M - 4N	10	1/4	7.1	19	17.6	38.1
TFTA - 10M - 6N	10	3/8	7.1	22	17.6	40.1
TFTA - 10M - 8N	10	1/2	7.7	27	17.6	46.5
TFTA - 12M - 4N	12	1/4	8.8	19	23.3	43.4
TFTA - 12M - 6N	12	3/8	8.8	22	23.3	45.5
TFTA - 12M - 8N	12	1/2	8.8	27	23.3	52.3
TFTA - 16M - 6N	16	3/8	12.7	24	24.7	48.0
TFTA - 16M - 8N	16	1/2	12.7	27	24.7	53.1
TFTA - 20M - 8N	20	1/2	15.1	27	26.6	56.0
TFTA - 20M - 12N	20	3/4	15.1	35	26.6	56.0

"D" - Dimension is minimum opening - dimensions are for reference only, and are subject to change without notice.

FEMALE TUBE ADAPTER

TFTA

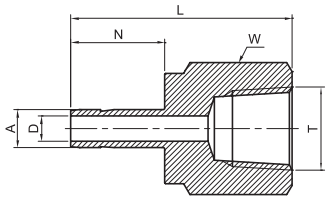

TUBE (INCH) FEMALE PIPE NPT THREAD											
Part Number	A Tube O.D.		T NPT	D		W Hex. flat		N		L	
	in	mm	in	in	mm	in	mm	in	mm	in	mm
TFTA - 2 - 2N	1/8	3.17	1/8	0.08	2.2	9/16	14.3	0.53	13.5	1.24	31.5
TFTA - 2 - 4N	1/8	3.17	1/4	0.08	2.2	3/4	19.1	0.53	13.5	1.39	35.3
TFTA - 3 - 4N	3/16	4.76	1/4	0.12	3.0	3/4	19.1	0.56	14.2	1.41	35.8
TFTA - 4 - 2N	1/4	6.35	1/8	0.17	4.2	9/16	14.3	0.62	15.7	1.30	33.0
TFTA - 4 - 4N	1/4	6.35	1/4	0.17	4.2	3/4	19.1	0.62	15.7	1.46	37.1
TFTA - 4 - 6N	1/4	6.35	3/8	0.17	4.2	7/8	22.2	0.62	15.7	1.55	39.4
TFTA - 4 - 8N	1/4	6.35	1/2	0.17	4.2	1-1/16	27.0	0.62	15.7	1.79	45.5
TFTA - 5 - 4N	5/16	7.93	1/4	0.24	6.0	3/4	19.1	0.67	16.9	1.48	37.6
TFTA - 6 - 2N	3/8	9.52	1/8	0.27	6.85	9/16	14.3	0.69	17.5	1.35	34.3
TFTA - 6 - 4N	3/8	9.52	1/4	0.27	6.85	3/4	19.1	0.69	17.5	1.50	38.1
TFTA - 6 - 6N	3/8	9.52	3/8	0.27	6.85	7/8	22.2	0.69	17.5	1.59	40.4
TFTA - 6 - 8N	3/8	9.52	1/2	0.27	6.85	1-1/16	27.0	0.69	17.5	1.84	46.7
TFTA - 8 - 4N	1/2	12.70	1/4	0.37	9.4	3/4	19.1	0.92	23.3	1.71	43.4
TFTA - 8 - 6N	1/2	12.70	3/8	0.37	9.4	7/8	22.2	0.92	23.3	1.79	45.5
TFTA - 8 - 8N	1/2	12.70	1/2	0.37	9.4	1-1/16	27.0	0.92	23.3	2.04	51.8
TFTA - 10 - 8N	5/8	15.87	1/2	0.50	12.7	1-1/16	27.0	0.97	24.7	2.09	53.1
TFTA - 12 - 8N	3/4	19.05	1/2	0.59	15.0	1-1/16	27.0	0.97	24.7	2.08	52.8
TFTA - 12 - 12N	3/4	19.05	3/4	0.59	15.0	1-5/16	33.3	0.97	24.7	2.16	54.9
TFTA - 12 - 16N	3/4	19.05	1	0.59	15.0	1-5/8	41.3	0.97	24.7	2.30	58.4
TFTA - 16 - 12N	1	25.40	3/4	0.80	20.3	1-5/16	33.3	1.30	33.0	2.39	60.7
TFTA - 16 - 16N	1	25.4	1	0.8	20.3	1-5/8	41.3	1.3	33	2.53	64.3
TFTA - 20 - 20N	1-1/4	31.75	1-1/4	1.02	25.9	2-1/8	54	1.72	43.9	3.06	77.7
TFTA - 24 - 24N	1-1/2	38.1	1-1/2	1.25	31.8	2-3/8	60.3	2.06	52.5	3.5	88.9
TFTA - 32- 32N	2	50.8	2	1.72	43.7	2-7/8	73.03	2.73	69.4	4.22	107.44

"D" - Dimension is minimum opening - dimensions are for reference only, and are subject to change without notice.

FEMALE TUBE ADAPTER

TFTA

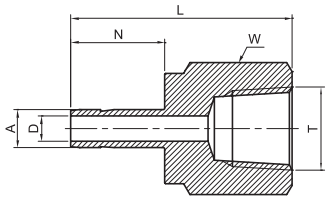

TUBE (INCH) FEMALE PIPE ISO TAPERED THREAD											
Part Number	A Tube O.D.		T ISO	D		W Hex. flat		N		L	
	in	mm	in	in	mm	in	mm	in	mm	in	mm
TFTA - 2 - 2P	1/8	3.17	Rc 1/8	0.08	2.2	9/16	14.3	0.53	13.5	1.24	31.5
TFTA - 2 - 4P	1/8	3.17	Rc 1/4	0.08	2.2	3/4	19.1	0.53	13.5	1.39	35.3
TFTA - 3 - 4P	3/16	4.76	Rc 1/4	0.12	3.0	3/4	19.1	0.56	14.2	1.41	35.8
TFTA - 4 - 2P	1/4	6.35	Rc 1/8	0.17	4.2	9/16	14.3	0.62	15.7	1.30	33.0
TFTA - 4 - 4P	1/4	6.35	Rc 1/4	0.17	4.2	3/4	19.1	0.62	15.7	1.46	37.1
TFTA - 4 - 6P	1/4	6.35	Rc 3/8	0.17	4.2	7/8	22.2	0.62	15.7	1.55	39.4
TFTA - 4 - 8P	1/4	6.35	Rc 1/2	0.17	4.2	1-1/16	27.0	0.62	15.7	1.79	45.5
TFTA - 5 - 4P	5/16	7.93	Rc 1/4	0.24	6.0	3/4	19.1	0.67	16.9	1.48	37.6
TFTA - 6 - 2P	3/8	9.52	Rc 1/8	0.27	6.85	9/16	14.3	0.69	17.5	1.35	34.3
TFTA - 6 - 4P	3/8	9.52	Rc 1/4	0.27	6.85	3/4	19.1	0.69	17.5	1.50	38.1
TFTA - 6 - 6P	3/8	9.52	Rc 3/8	0.27	6.85	7/8	22.2	0.69	17.5	1.59	40.4
TFTA - 6 - 8P	3/8	9.52	Rc 1/2	0.27	6.85	1-1/16	27.0	0.69	17.5	1.84	46.7
TFTA - 8 - 4P	1/2	12.70	Rc 1/4	0.37	9.4	3/4	19.1	0.92	23.3	1.71	43.4
TFTA - 8 - 6P	1/2	12.70	Rc 3/8	0.37	9.4	7/8	22.2	0.92	23.3	1.79	45.5
TFTA - 8 - 8P	1/2	12.70	Rc 1/2	0.37	9.4	1-1/16	27.0	0.92	23.3	2.04	51.8
TFTA - 10 - 8P	5/8	15.87	Rc 1/2	0.50	12.7	1-1/16	27.0	0.97	24.7	2.09	53.1
TFTA - 12 - 8P	3/4	19.05	Rc 1/2	0.59	15.0	1-1/16	27.0	0.97	24.7	2.08	52.8
TFTA - 12 - 12P	3/4	19.05	Rc 3/4	0.59	15.0	1-5/16	33.3	0.97	24.7	2.16	54.9
TFTA - 12 - 16P	3/4	19.05	Rc 1	0.59	15.0	1-5/8	41.3	0.97	24.7	2.30	58.4
TFTA - 16 - 12P	1	25.40	Rc 3/4	0.80	20.3	1-5/16	33.3	1.30	33.0	2.39	60.7
TFTA - 16 - 16P	1	25.4	Rc 1	0.8	20.3	1-5/8	41.3	1.3	33.0	2.53	64.3
TFTA - 20 - 20P	1-1/4	31.75	Rc 1-1/4	1.02	25.9	2-1/8	54	1.72	43.9	3.06	77.7
TFTA - 24 - 24P	1-1/2	38.1	Rc 1-1/2	1.25	31.8	2-3/8	60.3	2.06	52.5	3.5	88.9
TFTA - 32- 32P	2	50.8	Rc 2	1.72	43.7	2-7/8	73.03	2.73	69.4	4.22	107.44

"D" - Dimension is minimum opening - dimensions are for reference only, and are subject to change without notice.

MALE TUBE ADAPTER

TMTA

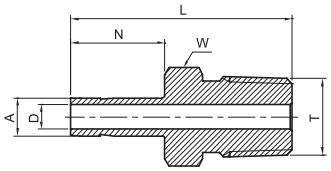

TUBE (METRIC) MALE PIPE NPT THREAD						
Part Number	A Tube O.D.	T NPT	D	W Hex. flat	N	L
	mm	in	mm	mm	mm	mm
TMTA - 3M - 2N	3	1/8	2.1	12	13.5	30.0
TMTA - 3M - 4N	3	1/4	2.1	14	13.5	35.3
TMTA - 6M - 2N	6	1/8	4.0	12	15.7	32.8
TMTA - 6M - 4N	6	1/4	4.0	14	15.7	38.1
TMTA - 6M - 6N	6	3/8	4.0	14	15.7	37.0
TMTA - 6M - 8N	6	1/2	4.0	22	15.7	43.4
TMTA - 8M - 2N	8	1/8	5.6	12	16.9	33.5
TMTA - 8M - 4N	8	1/4	5.6	14	16.9	39.1
TMTA - 8M - 8N	8	1/2	5.6	22	16.9	43.0
TMTA - 10M - 4N	10	1/4	7.1	14	17.6	39.9
TMTA - 10M - 6N	10	3/8	7.7	18	17.6	40.6
TMTA - 10M - 8N	10	1/2	7.7	22	17.6	46.2
TMTA - 12M - 4N	12	1/4	8.8	16	23.3	46.5
TMTA - 12M - 6N	12	3/8	8.8	18	23.3	46.5
TMTA - 12M - 8N	12	1/2	8.8	22	23.3	52.0
TMTA - 16M - 8N	16	1/2	12.7	22	24.7	50.5
TMTA - 20M - 12N	20	3/4	15.1	27	26.6	54.3

"D" - Dimension is minimum opening - dimensions are for reference only, and are subject to change without notice.

MALE TUBE ADAPTER

TMTA

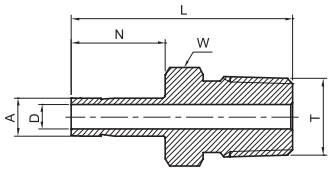

TUBE (INCH) MALE PIPE NPT THREAD											
Part Number	A Tube O.D.		T NPT	D		W Hex. flat		N		L	
	in	mm	in	in	mm	in	mm	in	mm	in	mm
TMTA - 2 - 2N	1/8	3.17	1/8	0.09	2.2	7/16	11.1	0.53	13.5	1.16	29.5
TMTA - 2 - 4N	1/8	3.17	1/4	0.09	2.2	9/16	14.3	0.53	13.5	1.37	34.8
TMTA - 3 - 2N	3/16	4.76	1/8	0.12	3.0	7/16	11.1	0.56	14.2	1.19	30.2
TMTA - 3 - 4N	3/16	4.76	1/4	0.12	3.0	9/16	14.3	0.56	14.2	1.40	35.6
TMTA - 4 - 2N	1/4	6.35	1/8	0.17	4.2	7/16	11.1	0.62	15.7	1.25	31.8
TMTA - 4 - 4N	1/4	6.35	1/4	0.17	4.2	9/16	14.3	0.62	15.7	1.46	37.1
TMTA - 4 - 6N	1/4	6.35	3/8	0.17	4.2	11/16	17.5	0.62	15.7	1.49	37.9
TMTA - 4 - 8N	1/4	6.35	1/2	0.17	4.2	7/8	22.2	0.62	15.7	1.71	43.4
TMTA - 5 - 2N	5/16	7.93	1/8	0.24	6.0	7/16	11.1	0.67	16.9	1.29	32.7
TMTA - 5 - 4N	5/16	7.93	1/4	0.24	6.0	9/16	14.3	0.67	16.9	1.50	38.1
TMTA - 6 - 2N	3/8	9.52	1/8	0.28	7.1	7/16	11.1	0.69	17.5	1.32	33.5
TMTA - 6 - 4N	3/8	9.52	1/4	0.28	7.1	9/16	14.3	0.69	17.5	1.53	38.9
TMTA - 6 - 6N	3/8	9.52	3/8	0.28	7.1	11/16	17.5	0.69	17.5	1.56	39.6
TMTA - 6 - 8N	3/8	9.52	1/2	0.28	7.1	7/8	22.2	0.69	17.5	1.78	45.2
TMTA - 8 - 4N	1/2	12.70	1/4	0.37	9.4	9/16	14.3	0.92	23.3	1.75	44.5
TMTA - 8 - 6N	1/2	12.70	3/8	0.37	9.4	11/16	17.5	0.92	23.3	1.78	45.2
TMTA - 8 - 8N	1/2	12.70	1/2	0.37	9.4	7/8	22.2	0.92	23.3	20.0	50.8
TMTA - 10 - 6N	5/8	15.87	3/8	0.50	12.7	11/16	17.5	0.97	24.7	1.81	47.6
TMTA - 10 - 8N	5/8	15.87	1/2	0.50	12.7	7/8	22.2	0.97	24.7	2.06	52.3
TMTA - 10 - 12N	5/8	15.87	3/4	0.50	12.7	1-1/16	27.0	0.97	24.7	2.06	52.3
TMTA - 12 - 8N	3/4	19.05	1/2	0.59	15.0	7/8	22.2	0.97	24.7	2.06	52.3
TMTA - 12 - 12N	3/4	19.05	3/4	0.59	15.0	1-1/16	27.0	0.97	24.7	2.06	52.3
TMTA - 12 - 16N	3/4	19.05	1	0.59	15.0	1-3/8	34.9	0.97	24.7	2.28	57.3
TMTA - 14 - 12N	7/8	22.22	3/4	0.60	15.9	1-1/16	27.0	1.05	26.6	2.09	54.3
TMTA - 16 - 12N	1	25.40	3/4	0.80	20.3	1-1/16	27.0	1.30	33.0	2.31	58.7
TMTA - 16 - 16N	1	25.4	1	0.80	20.3	1-3/8	34.9	1.3	33.0	2.6	66.0
TMTA - 20 - 20N	1-1/4	31.75	1-1/4	1.02	25.9	1-3/4	44.5	1.72	43.9	3.16	80.3
TMTA - 24 - 24N	1-1/2	38.1	1-1/2	1.25	31.8	2-1/8	54.0	2.06	52.5	3.72	94.5
TMTA - 32 - 32N	2	50.8	2	1.72	43.7	2-9/16	65.1	2.73	69.4	3.72	119.4

"D" - Dimension is minimum opening - dimensions are for reference only, and are subject to change without notice.

MALE TUBE ADAPTER

TMTA

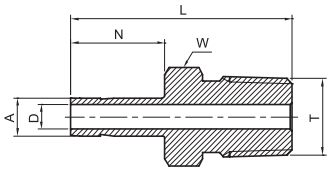

TUBE (INCH) MALE PIPE ISO TAPERED THREAD											
Part Number	A Tube O.D.		T ISO	D		W Hex. flat		N		L	
	in	mm	in	in	mm	in	mm	in	mm	in	mm
TMTA - 2 - 2P	1/8	3.17	R 1/8	0.09	2.2	7/16	11.1	0.53	13.5	1.16	29.5
TMTA - 2 - 4P	1/8	3.17	R 1/4	0.09	2.2	9/16	14.3	0.53	13.5	1.37	34.8
TMTA - 3 - 2P	3/16	4.76	R 1/8	0.12	3.0	7/16	11.1	0.56	14.2	1.19	30.2
TMTA - 3 - 4P	3/16	4.76	R 1/4	0.12	3.0	9/16	14.3	0.56	14.2	1.40	35.6
TMTA - 4 - 2P	1/4	6.35	R 1/8	0.17	4.2	7/16	11.1	0.62	15.7	1.25	31.8
TMTA - 4 - 4P	1/4	6.35	R 1/4	0.17	4.2	9/16	14.3	0.62	15.7	1.46	37.1
TMTA - 4 - 6P	1/4	6.35	R 3/8	0.17	4.2	11/16	17.5	0.62	15.7	1.49	37.9
TMTA - 4 - 8P	1/4	6.35	R 1/2	0.17	4.2	7/8	22.2	0.62	15.7	1.71	43.4
TMTA - 5 - 2P	5/16	7.93	R 1/8	0.24	6.0	7/16	11.1	0.67	16.9	1.29	32.7
TMTA - 5 - 4P	5/16	7.93	R 1/4	0.24	6.0	9/16	14.3	0.67	16.9	1.50	38.1
TMTA - 6 - 2P	3/8	9.52	R 1/8	0.28	7.1	7/16	11.1	0.69	17.5	1.32	33.5
TMTA - 6 - 4P	3/8	9.52	R 1/4	0.28	7.1	9/16	14.3	0.69	17.5	1.53	38.9
TMTA - 6 - 6P	3/8	9.52	R 3/8	0.28	7.1	11/16	17.5	0.69	17.5	1.56	39.6
TMTA - 6 - 8P	3/8	9.52	R 1/2	0.28	7.1	7/8	22.2	0.69	17.5	1.78	45.2
TMTA - 8 - 4P	1/2	12.70	R 1/4	0.28	7.1	9/16	14.3	0.92	23.3	1.75	44.5
TMTA - 8 - 6P	1/2	12.70	R 3/8	0.39	9.9	11/16	17.5	0.92	23.3	1.78	45.2
TMTA - 8 - 8P	1/2	12.70	R 1/2	0.39	9.9	7/8	22.2	0.92	23.3	20.0	50.8
TMTA - 10 - 6P	5/8	15.87	R 3/8	0.50	12.7	11/16	17.5	0.97	24.7	1.81	47.6
TMTA - 10 - 8P	5/8	15.87	R 1/2	0.50	12.7	7/8	22.2	0.97	24.7	2.06	52.3
TMTA - 10 - 12P	5/8	15.87	R 3/4	0.50	12.7	1-1/16	27.0	0.97	24.7	2.06	52.3
TMTA - 12 - 8P	3/4	19.05	R 1/2	0.59	15.0	7/8	22.2	0.97	24.7	2.06	52.3
TMTA - 12 - 12P	3/4	19.05	R 3/4	0.59	15.0	1-1/16	27.0	0.97	24.7	2.06	52.3
TMTA - 12 - 16P	3/4	19.05	R 1	0.59	15.0	1-3/8	34.9	0.97	24.7	2.28	57.3
TMTA - 14 - 12P	7/8	22.22	R 3/4	0.60	15.9	1-1/16	27.0	1.05	26.6	2.09	54.3
TMTA - 16 - 16P	1	25.4	R 1	0.8	20.3	1-3/8	34.9	1.3	33.0	2.6	66.0
TMTA - 20 - 20P	1-1/4	31.75	R 1-1/4	1.02	25.9	1-3/4	44.5	1.72	43.9	3.16	80.3
TMTA - 24 - 24P	1-1/2	38.1	R 1-1/2	1.25	31.8	2-1/8	54.0	2.06	52.5	3.72	94.5
TMTA - 32 - 32P	2	50.8	R 2	1.72	43.7	2-9/16	65.1	2.73	69.4	3.72	119.4

"D" - Dimension is minimum opening - dimensions are for reference only, and are subject to change without notice.

MALE 90° ELBOW

TME

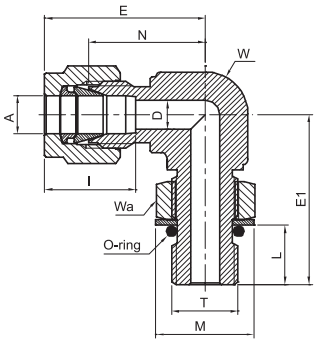

TUBE TO SAE/MS STRAIGHT THREAD BOSS (POSITIONABLE)*																						
Part Number	A Tube O.D.		T SAE/MS	D		W Wrench flat		Wa Hex. flat		N		E		E1		L		M		I		O-ring**
	in	mm	in	in	mm	in	mm	in	mm	in	mm	in	mm	in	mm	in	mm	in	mm	in	mm	Dash no.
TME - 4 - 4ST	1/4	6.35	7/16-20	0.19	4.8	1/2	12.7	9/16	14.3	0.83	21.1	1.12	28.45	1.12	28.45	0.39	9.9	0.65	16.5	0.6	15.3	-904
TME - 4 - 6ST	1/4	6.35	9/16-18	0.19	4.8	5/8	15.9	11/16	17.5	0.91	23.11	1.2	30.48	1.27	32.26	0.44	11.2	0.79	20.1	0.6	15.3	-906
TME - 5 - 5ST	5/16	7.93	1/2-20	0.25	6.35	9/16	14.3	5/8	15.9	0.9	22.86	1.19	30.22	1.16	29.46	0.39	9.9	0.72	18.28	0.64	16.2	-905
TME - 6 - 6ST	3/8	9.52	9/16-18	0.28	7.1	5/8	15.9	11/16	17.5	0.97	24.64	1.26	32.0	1.27	32.26	0.44	11.2	0.79	20.1	0.66	16.9	-906
TME - 6 - 8ST	3/8	9.52	3/4-16	0.28	7.1	13/16	20.6	7/8	22.2	1.07	27.43	1.37	34.8	1.49	37.84	0.5	12.7	1.01	25.65	0.66	16.9	-908
TME - 8 - 8ST	1/2	12.7	3/4-16	0.41	10.41	13/16	20.6	7/8	22.2	1.07	27.43	1.48	37.6	1.49	37.84	0.5	12.7	1.01	25.65	0.9	22.9	-908
TME - 10 - 10ST	5/8	15.87	7/8-14	0.5	12.7	1	25.4	1	25.4	1.16	29.46	1.56	39.62	1.7	43.43	0.56	14.2	1.16	29.46	0.96	24.4	-910
TME - 12 - 12ST	3/4	19.05	1-1/16-12	0.62	15.74	1-1/16	27	1-1/4	31.75	1.22	31.24	1.63	41.4	1.91	48.76	0.65	16.7	1.45	36.6	1.0	24.5	-912
TME - 14 - 14ST	7/8	22.22	1-3/16-12	0.72	18.28	1-1/4	31.75	1-3/8	34.9	1.3	33.02	1.7	43.18	1.99	50.54	0.65	16.7	1.59	40.4	1.02	25.9	-914
TME - 16 - 16ST	1	25.4	1-5/16-12	0.88	22.35	1-3/8	34.9	1-1/2	38.1	1.5	38.35	1.98	50.54	2.1	53.6	0.65	16.7	1.72	43.94	1.22	31.2	-916

TUBE (INCH) TO ISO PARALLEL THREAD (POSITIONABLE)*																						
Part Number	A Tube O.D.		T ISO	D		W Wrench flat		Wa Hex. flat		N		E		E1		L		M		I		O-ring** I.D.
	in	mm	in	in	mm	in	mm	in	mm	in	mm	in	mm	in	mm	in	mm	in	mm	in	mm	Dash no.
TME - 4 - 2PR	1/4	6.35	1/8-28 BSPP	0.1	4.0	1/2	12.7	9/16	14.3	0.77	19.6	1.06	26.9	1.04	26.4	0.32	8.1	0.68	17.3	0.60	15.3	8.0
TME - 4 - 4PR	1/4	6.35	1/4-19 BSPP	0.19	4.8	5/8	15.9	3/4	19.0	0.85	21.6	1.14	28.9	1.27	32.2	0.36	9.1	0.90	22.9	0.60	15.3	-
TME - 6 - 4PR	3/8	9.52	1/4-19 BSPP	0.23	5.9	5/8	15.9	3/4	19.0	0.91	23.1	1.20	30.5	1.27	32.2	0.36	9.1	0.90	22.9	0.66	16.9	-

TUBE (METRIC) TO ISO PARALLEL THREAD (POSITIONABLE)														
Part Number	A Tube O.D.	T ISO	D	W Wrench flat		Wa Hex. flat		N	E	E1	L	M	I	O-ring** I.D.
	mm	in	mm	in	mm	in	mm	mm	mm	mm	mm	mm	mm	Dash no.
TME - 6M - 2PR	6	1/8-28 BSPP	4.0	1/2	12.7	9/16	14.3	19.6	27.0	26.4	8.1	17.3	15.3	8.0
TME - 8M - 2PR	8	1/8-28 BSPP	4.0	5/8	15.9	9/16	14.3	21.3	28.8	27.4	8.1	17.3	16.2	8.0
TME - 8M - 4PR	8	1/4-19 BSPP	5.9	5/8	15.9	3/4	19.0	22.4	29.9	32.2	9.1	22.9	16.9	-

"D" - Dimension is minimum opening - dimensions are for reference only, and are subject to change without notice.
* SAE J 1926 and MS 16142. See page 61 for mounting dimensions.
** O-Rings used are FKM® 90 Durometer. Other O-Ring materials are available on reguest.

MALE 45° ELBOW

TMHE

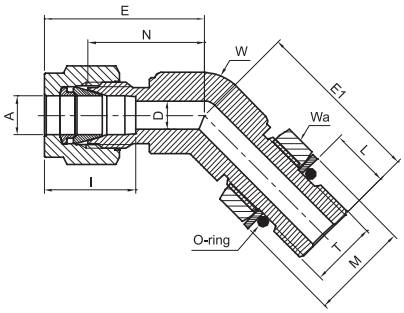

TUBE TO SAE/MS STRAIGHT THREAD BOSS (POSITIONABLE)*																						
Part Number	A Tube O.D.		T SAE/MS	D		W Wrench flat		Wa Hex. flat		N		E		E1		L		M		I		O-ring**
	in	mm	in	in	mm	in	mm	in	mm	in	mm	in	mm	in	mm	in	mm	in	mm	in	mm	Dash no.
TMHE - 4 - 4ST	1/4	6.35	7/16-20	0.19	4.8	1/2	12.7	9/16	14.3	0.72	18.29	1.01	25.65	1.01	25.65	0.39	9.9	0.65	16.5	0.6	15.3	-904
TMHE - 6 - 6ST	3/8	9.52	9/16-18	0.28	7.1	5/8	15.9	11/16	17.5	0.81	20.06	1.1	28.0	1.06	28.2	0.44	11.2	0.79	20.1	0.66	16.9	-906
TMHE - 8 - 8ST	1/2	12.7	3/4-16	0.41	10.41	13/16	20.6	7/8	22.2	0.86	21.84	1.26	32.0	1.27	32.25	0.5	12.7	1.01	25.65	0.9	22.9	-908
TMHE - 12 - 12ST	3/4	19.05	1-1/16-12	0.62	15.74	1-1/16	27.0	1-1/4	31.75	1.17	29.7	1.57	39.87	1.86	47.24	0.65	16.7	1.45	36.6	0.96	24.4	-910
TMHE - 16 - 16ST	1	25.4	1-5/16-12	0.88	22.35	1-3/8	34.9	1-1/2	38.1	1.39	35.3	1.87	47.5	1.97	50.24	0.65	16.7	1.72	43.94	1.0	24.5	-912

TUBE (INCH) TO ISO PARALLEL THREAD (POSITIONABLE)*																						
Part Number	A Tube O.D.		T ISO	D		W Wrench flat		Wa Hex. flat		N		E		E1		L		M		I		O-ring** I.D.
	in	mm	in	in	mm	in	mm	in	mm	in	mm	in	mm	in	mm	in	mm	in	mm	in	mm	Dash no.
TMHE - 4 - 2PR	1/4	6.35	1/8-28 BSPP	0.16	4.0	9/16	14.3	9/16	14.3	0.69	17.5	0.98	24.9	0.94	24.0	0.32	8.1	0.68	17.3	0.60	15.3	8.0

TUBE (METRIC) TO ISO PARALLEL THREAD (POSITIONABLE)														
Part Number	A Tube O.D.	T ISO	D	W Wrench flat		Wa Hex. flat		N	E	E1	L	M	I	O-ring** I.D.
	mm	in	mm	in	mm	in	mm	mm	mm	mm	mm	mm	mm	Dash no.
TMHE - 6 - 2PR	6	1/8-28 BSPP	4.0	9/16	14.3	9/16	14.3	17.55	24.9	24.0	8.1	17.3	15.3	8.0

"D" - Dimension is minimum opening - dimensions are for reference only, and are subject to change without notice.
* ISO PARALLEL THREAD FOR BS-2779. See page 64 for mounting dimensions.
** O-Rings used are Viton® 90 Durometer. Other O-Ring materials are available on reguest.

MALE RUN TEE

TMRT

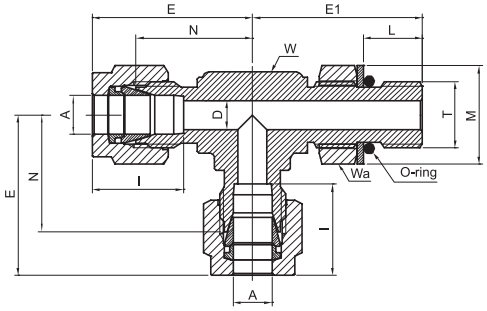

TUBE TO SAE/MS STRAIGHT THREAD BOSS (POSITIONABLE)*																					
Part Number	A Tube O.D.		T SEA/MS	D		W Wrench flat		Wa Hex. flat		N		E		E1		L		M		I		O-ring**
	in	mm	in	in	mm	in	mm	in	mm	in	mm	in	mm	in	mm	in	mm	in	mm	in	mm	Dash no.
TMRT - 4 - 4ST	1/4	6.35	7/16-20	0.19	4.8	1/2	12.7	9/16	14.3	0.83	21.1	1.12	28.45	1.12	28.45	0.39	9.9	0.65	16.5	0.60	15.3	-904
TMRT - 6 - 6ST	3/8	9.52	9/16-18	0.28	7.1	5/8	15.9	11/16	17.5	0.97	24.64	1.26	32	1.27	32.26	0.44	11.2	0.79	20.1	0.66	16.9	-906
TMRT - 8 - 8ST	1/2	12.7	3/4-16	0.41	10.41	13/16	20.6	7/8	22.2	1.07	27.43	1.48	37.6	1.49	37.84	0.5	12.7	1.01	25.65	0.9	22.9	-908
TMRT - 12 - 12ST	3/4	19.05	1-1/16-12	0.62	15.74	1-1/16	27	1-1/4	31.75	1.22	31.24	1.63	41.4	1.91	48.76	0.65	16.7	1.45	36.6	1.0	24.5	-912
TMRT - 16 - 16ST	1	25.4	1-5/16-12	0.88	22.35	1-3/8	34.9	1-1/2	38.1	1.5	38.35	1.98	50.54	2.1	53.6	0.65	16.7	1.72	43.94	1.22	31.2	-916

TUBE (INCH) TO ISO PARALLEL THREAD (POSITIONABLE)*																						
Part Number	A Tube O.D.		T ISO	D		W Wrench flat		Wa Hex. flat		N		E		E1		L		M		I		O-ring** I.D.
	in	mm	in	in	mm	in	mm	in	mm	in	mm	in	mm	in	mm	in	mm	in	mm	in	mm	Dash no.
TMRT - 4 - 2PR	1/4	6.35	1/8-28 BSPP	0.16	4.0	1/2	12.7	9/16	14.3	0.77	19.6	1.06	26.9	1.04	26.4	0.32	8.1	0.68	17.3	0.60	15.3	8.0
TMRT - 4 - 4PR	1/4	6.35	1/4-19 BSPP	0.19	4.8	5/8	15.9	3/4	19.0	0.85	21.6	1.14	28.9	1.27	32.2	0.36	9.1	0.90	22.9	0.60	15.3	-
TMRT - 6 - 4PR	3/8	9.53	1/4-19 BSPP	0.23	5.9	5/8	15.9	3/4	19.0	0.91	23.1	1.20	30.5	1.27	32.2	0.36	9.1	0.90	22.9	0.66	16.9	-

TUBE (METRIC) TO ISO PARALLEL THREAD (POSITIONABLE)														
Part Number	A Tube O.D.	T ISO	D	W Wrench flat		Wa Hex. flat		N	E	E1	L	M	I	O-ring** I.D.
	mm	in	mm	in	mm	in	mm	mm	mm	mm	mm	mm	mm	Dash no.
TMRT - 8M - 4PR	8	1/4-19 BSPP	5.9	5/8	15.9	3/4	19.0	22.4	29.9	32.2	9.1	22.9	16.9	-

MALE BRANCH TEE

TMBT

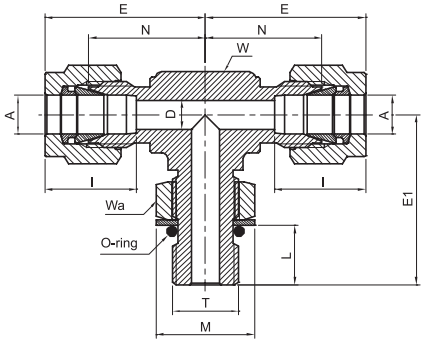

TUBE TO SAE/MS STRAIGHT THREAD BOSS (POSITIONABLE) *																						
Part Number	A Tube O.D.		T SEA/MS	D		W Wrench flat		Wa Hex. flat		N		E		E1		L		M		I		O-ring**
	in	mm	in	in	mm	in	mm	in	mm	in	mm	in	mm	in	mm	in	mm	in	mm	in	mm	Dash no.
TMBT - 4 - 4ST	1/4	6.35	7/16-20	0.19	4.8	1/2	12.7	9/16	14.3	0.83	21.1	1.12	28.45	1.12	28.45	0.39	9.9	0.65	16.5	0.60	15.3	-904
TMBT - 6 - 6ST	3/8	9.52	9/16-18	0.28	7.1	5/8	15.9	11/16	17.5	0.97	24.64	1.26	32	1.27	32.26	0.44	11.2	0.79	20.1	0.66	16.9	-906
TMBT - 8 - 8ST	1/2	12.7	3/4-16	0.41	10.41	13/16	20.6	7/8	22.2	1.07	27.43	1.48	37.6	1.49	37.84	0.5	12.7	1.01	25.65	0.9	22.9	-908
TMBT - 12 - 12ST	3/4	19.05	1-1/16-12	0.62	15.74	1-1/16	27.0	1-1/4	31.75	1.22	31.24	1.63	41.4	1.91	48.76	0.65	16.7	1.45	36.6	1.0	24.5	-912
TMBT - 16 - 16ST	1	25.4	1-5/16-12	0.88	22.35	1-3/8	34.9	1-1/2	38.1	1.5	38.35	1.98	50.54	2.1	53.6	0.65	16.7	1.72	43.94	1.22	31.2	-916
TMBT - 6 - 6ST	3/8	9.52	9/16-18	0.28	7.1	5/8	15.9	11/16	17.5	0.97	24.64	1.26	32.0	1.27	32.26	0.44	11.2	0.79	20.1	0.66	16.9	-906

TUBE (INCH) TO ISO PARALLEL THREAD (POSITIONABLE)*																						
Part Number	A Tube O.D.		T ISO	D		W Wrench flat		Wa Hex. flat		N		E		E1		L		M		I		O-ring** I.D.
	in	mm	in	in	mm	in	mm	in	mm	in	mm	in	mm	in	mm	in	mm	in	mm	in	mm	Dash no.
TMBT - 4 - 2PR	1/4	6.35	1/8-28 BSPP	0.16	4.0	1/2	12.7	9/16	14.3	0.77	19.6	1.06	26.9	1.04	26.4	0.32	8.1	0.68	17.3	0.60	15.3	8.0

TUBE (METRIC) TO ISO PARALLEL THREAD (POSITIONABLE)														
Part Number	A Tube O.D.	T ISO	D	W Wrench flat		Wa Hex. flat		N	E	E1	L	M	I	O-ring** I.D.
	mm	in	mm	in	mm	in	mm	mm	mm	mm	mm	mm	mm	Dash no.
TMBT - 6M - 2PR	6	1/8-28 BSPP	4.0	1/2	12.7	9/16	14.3	19.6	27.0	26.4	8.1	17.3	15.3	8.0

"D" - Dimension is minimum opening - dimensions are for reference only, and are subject to change without notice.
* SAE J 1926 and MS 16142. See page 61 for mounting dimensions.
** O-Rings used are Viton® 90 Durometer. Other O-Ring materials are available on reguest.

MOUNTING DIMENSIONS

FOR SAE J1926 & MS 16142 BOSS

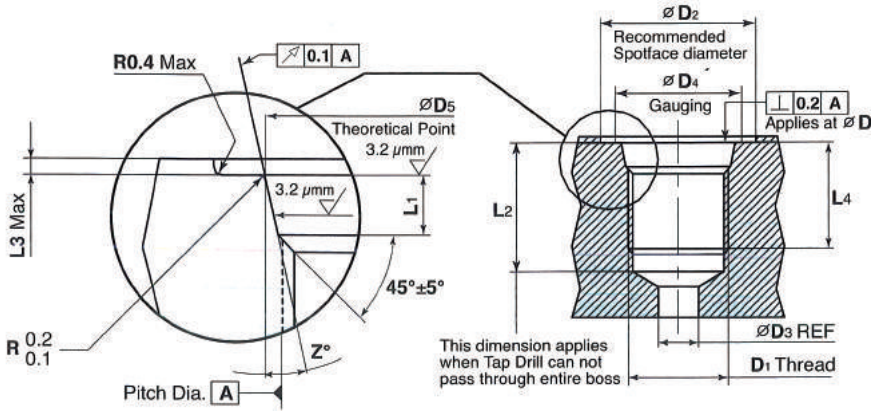

MOUNTING DIMENSIONS FOR O-SEAL CONNECTORS (SAE/MS)											
TUBE O.D.		D1 Thread Size	D2 Min. diameter	D3 Min. diameter	D4 Min	D5 ± 0.05	L1 ± 0.02	L2 Min	L3 Max.	L4 Min. full Thread	z° ± 1°
in	mm	in	± 0.05	mm	mm	mm	mm	mm	mm	mm	mm
1/8	3.18	5/16 - 24 UNF - 2B	17	1.6	11	9.15	2.1	12	1.6	10	12
3/16	4.76	3/8 - 24 UNF - 2B	19	3.5	13	10.75	2.1	12	1.6	10	12
1/4	6.35	7/16 - 20 UNF - 2B	21	4.5	15	12.45	2.6	14	1.6	11.5	12
5/16	7.94	1/2 - 20 UNF - 2B	23	6	16	14.05	2.6	14	1.6	11.5	12
3/8	9.52	9/16 - 18 UNF - 2B	25	7.5	18	15.70	2.7	15.5	1.6	12.7	12
1/2	12.70	3/4 - 16 UNF - 2B	30	10	22	20.65	2.7	17.5	2.4	14.3	15
5/8	15.88	7/8 - 14 UNF - 2B	34	12.5	26	24	2.7	20	2.4	16.7	15
3/4	19.05	1 1/16 - 12 UNF - 2B	41	16	32	29.2	3.5	23	2.4	19	15
7/8	22.22	1 3/16 - 12 UN - 2B	45	18	35	32.4	3.5	23	2.4	19	15
1	25.40	1 5/16 - 12 UN - 2B	49	21	38	35.55	3.5	23	3.2	19	15

"D" - Dimension is minimum opening - dimensions are for reference only, and are subject to change without notice.

INSTALLATION INSTRUCTIONS :

Figure 1
Locking backed off

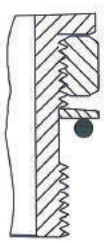

Lubricate the O-ring by inserting it into the groove adjacent to the face of the metal back-up washer which is assembled at the extreme end of the groove as shown in Figure 1.

Figure 2
Fitting install hand tight

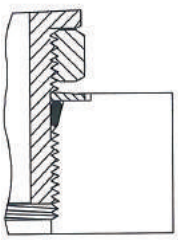

Install the fitting into the SAE straight thread boss, figure 2, until the metal back-up washer contacts the face of the boss as shown in Figure 2.

Figure 3
Fittings backed-off for alignment (1 turn maximum

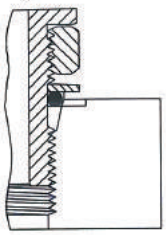

Position the fitting by turning it counter clockwise up to a maximum of one turn. (See Figure 3.)

Figure 4
Fitting locknut tight to appropriate torque

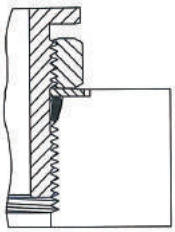

Holding the pad of the fitting with a wrench, tighten the locknut and washer against the face as shown in Figure 4.

ISO PARALLEL THREAD FOR BS-2779

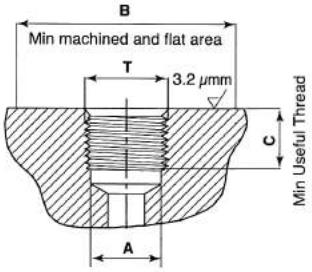

MOUNTING DIMENSIONS OF CONNECTORS								
T Female	A Thread Minor Diameter				D4 Min Machine and Flat Area		C Min useful Thread	
	max		min					
	in	mm	in	mm	mm	mm	mm	mm
1/8 - 28	0.35	8.89	0.34	8.64	0.5	13.50	0.28	7.00

INSTALLATION INSTRUCTIONS :

Figure 1
Locking backed off

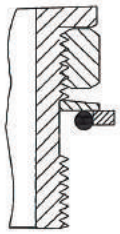

Lubricate the O-ring by inserting it into the groove adjacent to the face of the metal back-up washer which is assembled at the extreme end of the groove as shown in Figure 1.

Figure 2
Fitting install hand tight

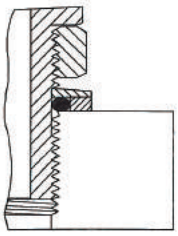

Install the fitting into the SAE straight thread boss until the metal back-up washer contacts the face of the boss as shown in Figure 2.

Figure 3
Fittings backed-off for alignment (1 turn maximum

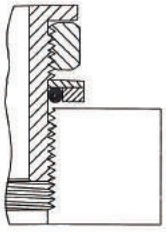

Position the fitting by turning it counter clock wise up to a maximum of one turn. See Figure 3.

Figure 4
Fitting locknut tight to appropriate torque

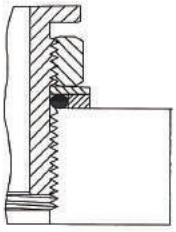

Holding the pad of the fitting with a wrench, tighten the lock-nut and washer against the face as shown in Figure 4.

"D" - Dimension is minimum opening - dimensions are for reference only, and are subject to change without notice.

BACK FERRULE

TBF

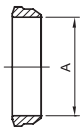

METRIC	
Part Number	A Tube O.D. mm
TBF - 2M	2
TBF - 3M	3
TBF - 4M	4
TBF - 6M	6
TBF - 8M	8
TBF - 10M	10
TBF - 12M	12
TBF - 14M	14
TBF - 15M	15
TBF - 16M	16
TBF - 18M	18
TBF - 20M	20
TBF - 25M	25
TBF - 28M	28
TBF - 32M	32
TBF - 38M	38
TBF - 42M	42

INCH		
Part Number	A Tube O.D.	
	in	mm
TBF - 1	1/16	1.58
TBF - 2	1/8	3.17
TBF - 3	3/16	4.76
TBF - 4	1/4	6.35
TBF - 5	5/16	7.93
TBF - 6	3/8	9.52
TBF - 8	1/2	12.70
TBF -10	5/8	15.87
TBF -12	3/4	19.05
TBF -14	7/8	22.22
TBF -16	1	25.40
TBF - 20	1-1/4	31.75
TBF - 24	1-1/2	38.10
TBF - 32	2	50.80

FRONT FERRULE

TFF

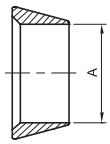

METRIC	
Part Number	A Tube O.D. mm
TFF - 2M	2
TFF - 3M	3
TFF - 4M	4
TFF - 6M	6
TFF - 8M	8
TFF - 10M	10
TFF - 12M	12
TFF - 14M	14
TFF - 15M	15
TFF - 16M	16
TFF - 18M	18
TFF - 20M	20
TFF - 22M	22
TFF - 25M	25
TFF - 28M	28
TFF - 32M	32
TFF - 38M	38
TFF - 42M	42

INCH		
Part Number	A Tube O.D.	
	in	mm
TFF - 1	1/16	1.58
TFF - 2	1/8	3.17
TFF - 3	3/16	4.76
TFF - 4	1/4	6.35
TFF - 5	5/16	7.93
TFF - 6	3/8	9.52
TFF - 8	1/2	12.70
TFF - 10	5/8	15.87
TFF - 12	3/4	19.05
TFF - 14	7/8	22.22
TFF - 16	1	25.40
TFF - 20	1-1/4	31.75
TFF - 24	1-1/2	38.10
TFF - 32	2	50.80

FERRULE SET

TFS

METRIC	
Part Number	Tube O.D. mm
TFS - 2M	2
TFS - 3M	3
TFS - 4M	4
TFS - 6M	6
TFS - 8M	8
TFS - 10M	10
TFS - 12M	12
TFS - 14M	14
TFS - 15M	15
TFS - 16M	16
TFS - 18M	18
TFS - 20M	20
TFS - 22M	22
TFS - 25M	25
TFS - 28M	28
TFS - 32M	32
TFS - 38M	38
TFS - 42M	42

INCH		
Part Number	Tube O.D.	
	in	mm
TFS - 1	1/16	1.58
TFS - 2	1/8	3.17
TFS - 3	3/16	4.76
TFS - 4	1/4	6.35
TFS - 5	5/16	7.93
TFS - 6	3/8	9.52
TFS - 8	1/2	12.7
TFS - 10	5/8	15.87
TFS - 12	3/4	19.05
TFS - 14	7/8	22.22
TFS - 16	1	25.40
TFS - 20	1-1/4	31.75
TFS - 24	1-1/2	38.10
TFS - 32	2	50.80

* The ferrule set contains one front ferrule and back ferrule.
Please order ferrule sets in multiples of ten.

"D" - Dimension is minimum opening - dimensions are for reference only, and are subject to change without notice.

NUT

TFN

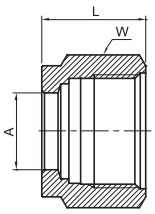

METRIC			
Part Number	A Tube O.D.	W Hex. Flat	L
	mm	mm	mm
TFN - 2M	2	12	11.9
TFN - 3M	3	12	11.9
TFN - 4M	4	12	11.9
TFN - 6M	6	14	12.7
TFN - 8M	8	16	13.5
TFN - 10M	10	19	15.1
TFN - 12M	12	22	17.4
TFN - 14M	14	25	17.4
TFN - 15M	15	25	17.4
TFN - 16M	16	25	17.4
TFN - 18M	18	30	17.4
TFN - 20M	20	32	17.4
TFN - 22M	22	32	17.4
TFN - 25M	25	38	20.6
TFF - 28M	28	46	30.6
TFF - 32M	32	50	34.4
TFF - 38M	38	60	40.6
TFF - 42M	42	65	44.7

INCH						
Part Number	A Tube O.D.		W Hex. Flat		L	
	in	mm	in	mm	in	mm
TFN - 1	1/16	1.58	5/16	7.9	0.31	7.87
TFN - 2	1/8	3.17	7/16	11.1	0.47	11.93
TFN - 3	3/16	4.76	1/2	12.7	0.47	11.93
TFN - 4	1/4	6.35	9/16	14.3	0.50	12.70
TFN - 5	5/16	7.93	5/8	15.9	0.53	13.46
TFN - 6	3/8	9.52	11/16	17.5	0.56	14.20
TFN - 8	1/2	12.70	7/8	22.2	0.69	17.50
TFN - 10	5/8	15.87	1	25.4	0.69	17.52
TFN - 12	3/4	19.05	1-1/8	28.6	0.69	17.50
TFN - 14	7/8	22.22	1-1/4	31.8	0.69	17.52
TFN - 16	1	25.4	1-1/2	38.1	0.81	20.57
TFN - 20	1-1/4	31.75	1-7/8	47.6	1.25	31.75
TFN - 24	1-1/2	38.1	2-1/4	57.2	1.50	38.10
TFN - 32	2	50.8	3	76.2	2.06	52.32

NUT-FERRULE SET

TNFS

METRIC	
Part Number	Tube O.D.
	mm
TNFS - 2M	2
TNFS - 3M	3
TNFS - 4M	4
TNFS - 6M	6
TNFS - 8M	8
TNFS - 10M	10
TNFS - 12M	12
TNFS - 14M	14
TNFS - 15M	15
TNFS - 16M	16
TNFS - 18M	18
TNFS - 20M	20
TNFS - 22M	22
TNFS - 25M	25
TNFS - 28M	28
TNFS - 32M	32
TNFS - 38M	38
TNFS - 42M	42

INCH		
Part Number	Tube O.D.	
	in	mm
TNFS - 1	1/16	1.58
TNFS - 2	1/8	3.17
TNFS - 3	3/16	4.76
TNFS - 4	1/4	6.35
TNFS - 5	5/16	7.93
TNFS - 6	3/8	9.52
TNFS - 8	1/2	12.7
TNFS - 10	5/8	15.87
TNFS - 12	3/4	19.05
TNFS - 14	7/8	22.22
TNFS - 16	1	25.4
TNFS - 20	1-1/4	31.75
TNFS - 24	1-1/2	38.10
TNFS - 32	2	50.80

* Plaese order Nut-Ferrule Sets in multiples of five.

MALE NUT (INCH)

TMN

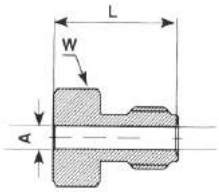

Part Number	A Tube O.D.		W Hex. flat		L	
	in	mm	in	mm	in	mm
TMN - 1	1/16	1.58	1/4	6.4	3/8	9.52

TUBE INSERT

TTI

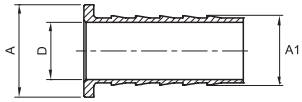

METRIC			
Part Number	A Tube O.D.	A1 Tube O.D.	D
	mm	mm	mm
TTI - 6M - 4M	6	4	2.8
TTI - 8M - 6M	8	6	4.4
TTI -10M - 8M	10	8	6.4
TTI -12M - 8M	12	8	6.4
TTI -12M -10M	12	10	8.3

INCH						
Part Number	A Tube O.D.		A1 Tube O.D.		D	
	in	mm	in	mm	in	mm
TTI - 3 - 2	3/16	4.76	1/8	3.17	0.09	2.30
TTI - 4 - 2	1/4	6.35	1/8	3.17	0.09	2.30
TTI - 4 / 70	1/4	6.35	.17	4.32	0.11	2.70
TTI - 4 - 3	1/4	6.35	3/16	4.76	0.12	3.10
TTI - 5 - 2	5/16	7.93	1/8	3.17	0.09	2.30
TTI - 5 - 3	5/16	7.93	3/16	4.76	0.12	3.00
TTI - 5 - 4	5/16	7.93	1/4	6.35	0.18	4.65
TTI - 6 - 3	3/8	9.52	3/16	4.76	0.12	3.10
TTI - 6 - 4	3/8	9.52	1/4	6.35	0.18	4.65
TTI - 8 - 4	1/2	12.70	1/4	6.35	0.18	4.65
TTI - 8 - 6	1/2	12.70	3/8	9.52	0.31	7.80
TTI -10 - 6	5/8	15.87	3/8	9.52	0.31	7.80
TTI -10 - 8	5/8	15.87	1/2	12.70	0.44	11.10
TTI -12 - 8	3/4	19.05	1/2	12.70	0.44	11.10
TTI -12 - 10	3/4	19.05	5/8	15.87	0.56	14.20
TTI -16 - 12	1	25.40	3/4	19.05	0.69	17.50

"D" - Dimension is minimum opening - dimensions are for reference only, and are subject to change without notice.

T-LOK Single Ferrule Tube Fittings

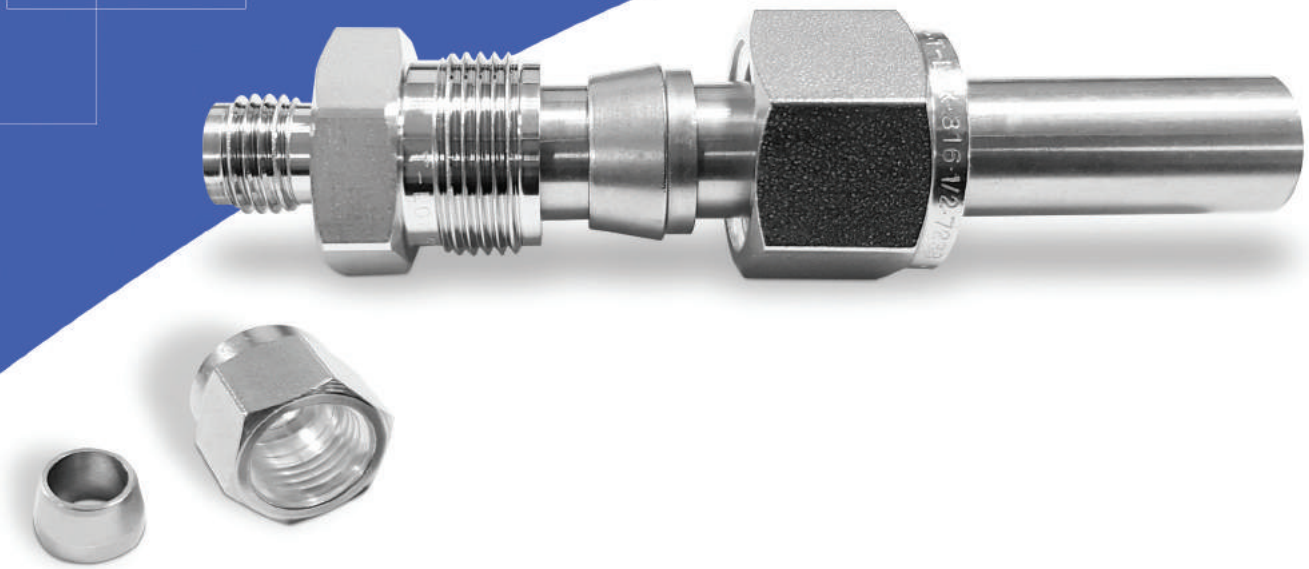

TO SERIES

- Corrosion resistant ferrule.
- Size from 1/4 to 1/2inch is available.
- Easy installation using hand tool.

TK-FUJIKIN CORPORATION
Fujikin Carp Group

FEATURES

T-LOK single ferrule tube fittings are designed to provide secure connections that can withstand high pressure, vibration and vacuum applications.
To this end, T-LOK single ferrule tube fittings are made up of three parts that are precision engineered and machined body, ferrule and nut. This fitting includes single ferrule with standard T-LOK tube fitting body and nut.

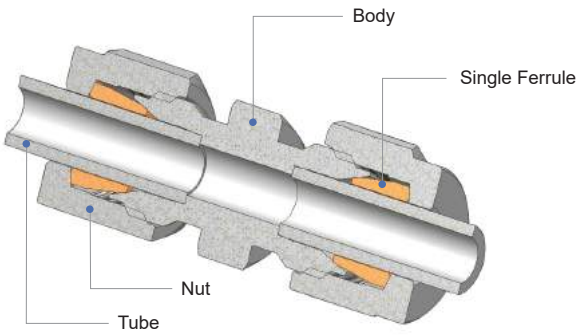

MATERIALS

Description	Bar Stock	Forgings
Stainless Steel 316/316L, 304/304L	ASTM A276, ASME SA276 ASTM A479, ASME SA479	ASTM A182 ASME SA182

TUBING TEMPERATURE RANGES

Material	Temperature Range
Stainless Steel	-321°F to 1200°F (-196°C to 649°C)

ALLOWABLE WORKING TEMPERATURE

When Elastomer seal is used in the fitting, care must be taken for allowble working temperature.

Coponent	Working Temperature
NBR (Perbunan®)	-40°F to 212°F (-40°C to 100°C)
FKM (Viton®)	-15°F to 450°F (-26°C~232°C)
FFKM (Kalrez®)	-22°F to 527°F (-30°C to 275°C)
PTFE (Teflon®)	-65°F to 450°F (-54°C to 232°C)

MAXIMUM ALLOWABLE WORKING PRESSURE

- Fully Annealed seamless type 304/304L, 316/316L to ASTM A269 or equivalent
- Hardness: Rb90 or less

Tube O.D. in	Tube Wall Thickness(INCH)							
	0.028	0.035	0.049	0.065	0.083	0.095	0.109	0.12
1/8"	8500	10900						
1/4"	4000	5100	7500	10200				
3/8"		3300	4800	6500				
1/2"		2600	3750	5100	6700			
3/4"			2400	3300	4200	4900	5800	
1"				2400	3100	3600	4200	4700

■ According to the requirements of ASME B31.3(Process piping Code)
■ Allowable working pressures are calculated from an S value of 20000psi for ASTM A269 Tubing (at -20 to 100°F(-28 to 37°C))
■ Safety Factor: 3.75 : 1, Ultimate tensile strength of 75000psi
■ For gas service, select a tube wall thickness outside of the shaded area.

TEMPERATURE DERATING FACTORS

Temperature		Factor	Temperature		Factor
°F	°C		°F	°C	
100	38	1	700	371	0.82
200	93	1	800	426	0.79
300	149	1	900	482	0.78
400	204	0.96	1000	537	0.76
500	260	0.9	1100	593	0.62
600	315	0.85	1200	649	0.37

■ To determine allowable pressure at higher temperature, multiply allowable working pressure from 'MAXIMUM ALLOWABLE WORKING PRESSURE' by factors shown in 'TEMPERATURE DERATING FACTORS'

ORDERING INFORMATION

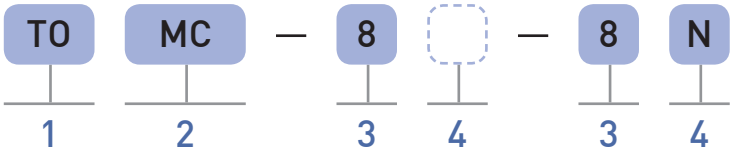

1. T-LOK SINGLE FERRULE TUBE FITTINGS

2. FITTING TYPE

Description	Designator
Union	U
Reducing Union	RU
Union Tee	UT
Reducing Union Tee	RUT
Union 90° Elbow	UE
Female Connector	FC
Reducer	R
Male Connector	MC
Male Pipe Weld Connector	MPWC
Tube Socket Weld Connector	TSWC
Male 90° Elbow	ME
Male Pipe Weld 90° Elbow	MPWE
Tube Socket Weld 90° Elbow	TSWE
Female 90° Elbow	FE
Male Run Tee	MRT
Female Run Tee	FRT
Male Branch Tee	MBT
Female Branch Tee	FBT
Bulkhead Union	BU
Bulkhead Female Connector	BFC
Bulkhead Reducer	BR
Bulkhead Male Connector	BMC
Union Cross	UC
Cap	C
Male 45° Elbow	MHE
Single Ferrule	F

3. CONNECTION SIZE

Size	Designator
1/8	2
1/4	4
3/8	6
1/2	8
3/4	12
1	16

4. CONNECTION TYPE

Description	Designator
T-LOK Single Ferrule	Blank
NPT	N
	NOR
ISO Tapered	P
ISO Parallel	RS
	RP
	PR
	RG
Unified Screw	SR
	OR
	ST
Male Pipe Weld	TW
Tube Socket Weld	SW
Thermocouple Connector	TC

PFA Hose Fittings

SPECIFICATIONS

- Easy assembly and reduced part quantity.
- PFA FITTING Working Temp : -65˚C~+260˚C.
- Providing function to prevent washer from detaching, when hose and body is separated.
- Easy assembly and disassembly due to surface treatment on the assembly part.

TK-FUJIKIN CORPORATION
Fujikin Carp Group

ORDERING INFORMATION

TH	U	—	4	X	3.96	—	4	
1	2		3		4		5	6

1. TKF HOSE FITTING SERIES

2. HOSE FITTING TYPE

Description	Designator
Union	U
Elbow	E
Tee	T
Bulkhead Union	BU
Bulkhead Female Connector	BFC
Bulkhead Male Connector	BMC

3. HOSE O.D.

Size	Designator
1/4"	4
3/8"	6
1/2"	8
3/4"	12
1"	16

4. HOSE I.D.

Size	Designator
3.96mm	3.96
6.39mm	6.39
9.56mm	9.56
15.91mm	15.91
22.26mm	22.26

5. CONNECTION SIZE

Size	Designator
1/4"	4
3/8"	6
1/2"	8
3/4"	12
1"	16

6. CONNECTION TYPE

Description	Designator
T-LOK	Blank
Male NPT	NM
Female NPT	NF
Male PT	PTM
Female PT	PTF

DIMENSIONS

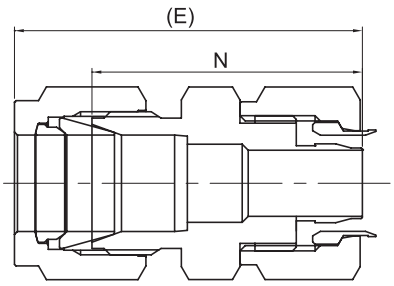

PFA Fitting Part No.	PFA Fitting Component Part NO.		Demensions mm	
			N	(E)
THU-4x3.96-4	Body	THU-4x3.96-4	28	35.2
	Nut	THN-4		
	Washer	THW-4		
THU-6x6.39-6	Body	THU-6x6.39-6	32.9	40.3
	Nut	THN-6		
	Washer	THW-6		
THU-8x9.56-8	Body	THU-8x9.56-8	32.9	40.3
	Nut	THN-8		
	Washer	THW-8		
THU-12x15.91-12	Body	THU-12x15.91-12	43	53.4
	Nut	THN-12		
	Washer	THW-12		
THU-16x22.26-16	Body	THU-16x22.26-16	55	67.8
	Nut	THN-16		
	Washer	THW-16		

Push-On Hose Fittings

TPO SERIES

- T-LOK ended outlets.
- T-LOK PUSH-ON Fittings are reusable.
- Assemblies can be faster.
- Easier maintenance.

TK-FUJIKIN CORPORATION
Fujikin Carp Group

ORDERING INFORMATION

1	—	2	3	—	4	—	5	6
		TPO	TF		4		4	N

1. BODY MATERIAL

Material	Designator
Stainless Steel 316/316L	Blank
Brass	B

2. T-LOK PUSH-ON HOSE FITTING

3. FITTING TYPE

Description	Designator
Tube Fitting	TF
Tube Adapter	TA
Male Pipe Thread	MA
Hose Straight Union	U

4. HOSE SIZE

Size	Designator
1/4"	4
3/8"	6
1/2"	8
3/4"	12
1"	16

5. CONNECTION SIZE

Size	Designator
1/4"	4
3/8"	6
1/2"	8
3/4"	12
1"	16

6. CONNECTION TYPE

Description	Designator
T-LOK Tube Fitting	Blank
T-LOK Tube Adapter	Blank
ISO Tapered	P
NPT	N

TECHNICAL DATA

Nominal Hose Size in	Average I.D.		Average O.D.		Max. Working Pressure		Max. Temperature Range
	in	mm	in	mm	psi	bar	Copper
1/4	1/4	6.35	1/2	12.7	350	24	It depends on the material of hose in use.
3/8	3/8	9.52	0.66	16.7	300	20	
1/2	1/2	12.7	0.76	19.2	300	20	
3/4	3/4	19.05	1.04	26.3	300	20	
1	1	25.4	1.38	34.9	200	14	

DIMENSIONS

TUBE FITTING

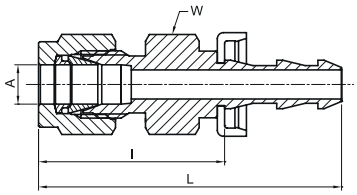

Part No.	Hose size	A Tube O.D	W Hex. Flat	I	L
TPOTF-4-4	1/4	1/4	9/16	30.7	50.0
TPOTF-6-6	3/8	3/8	3/4	30	53.6
TPOTF-8-8	1/2	1/2	7/8	33.7	62.7
TPOTF-12-12	3/4	3/4	1-1/16	36.6	78.4
TPOTF-16-16	1	1	1-3/8	45.4	91.9

* Dimensions are for reference only and are subject change.

TUBE ADAPTER

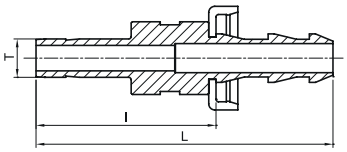

Part No.	Hose size	T Tube O.D	I	L
TPOTA-4-4	1/4	1/4	29.7	49
TPOTA-6-6	3/8	3/8	29.4	51.6
TPOTA-8-8	1/2	1/2	35.7	62.7
TPOTA-12-12	3/4	3/4	38	79.8
TPOTA-16-16	1	1	47.9	90.9

* Dimensions are for reference only and are subject change.

MALE ADAPTER

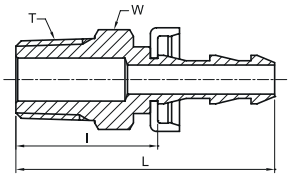

Part No.	Hose size	T Thread (NPT)	W Hex. Flat	I	L
TPOMA-4-4N	1/4	1/4	9/16	23.4	42.7
TPOMA-6-4N	3/8	1/4	11/16	23.5	53.6
TPOMA-6-6N	3/8	3/8	11/16	23.5	62.7
TPOMA-8-8N	1/2	1/2	7/8	28.6	62.7
TPOMA-12-12N	3/4	3/4	1-1/16	29.6	71.4
TPOMA-16-16N	1	1	1-3/8	35	81.5

* Dimensions are for reference only and are subject change.

STRAIGHT UNION

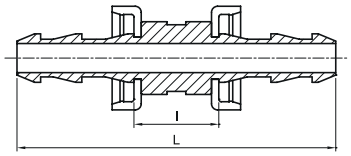

Part No.	Hose size	I	L
TPOU-4-4	1/4	14.0	52.6
TPOU-6-6	3/8	12.8	57.2
TPOU-8-8	1/2	15.4	69.4
TPOU-12-12	3/4	17.2	100.8
TPOU-16-16	1	20	113

* Dimensions are for reference only and are subject change.

Instrument Pipe & Weld Fittings

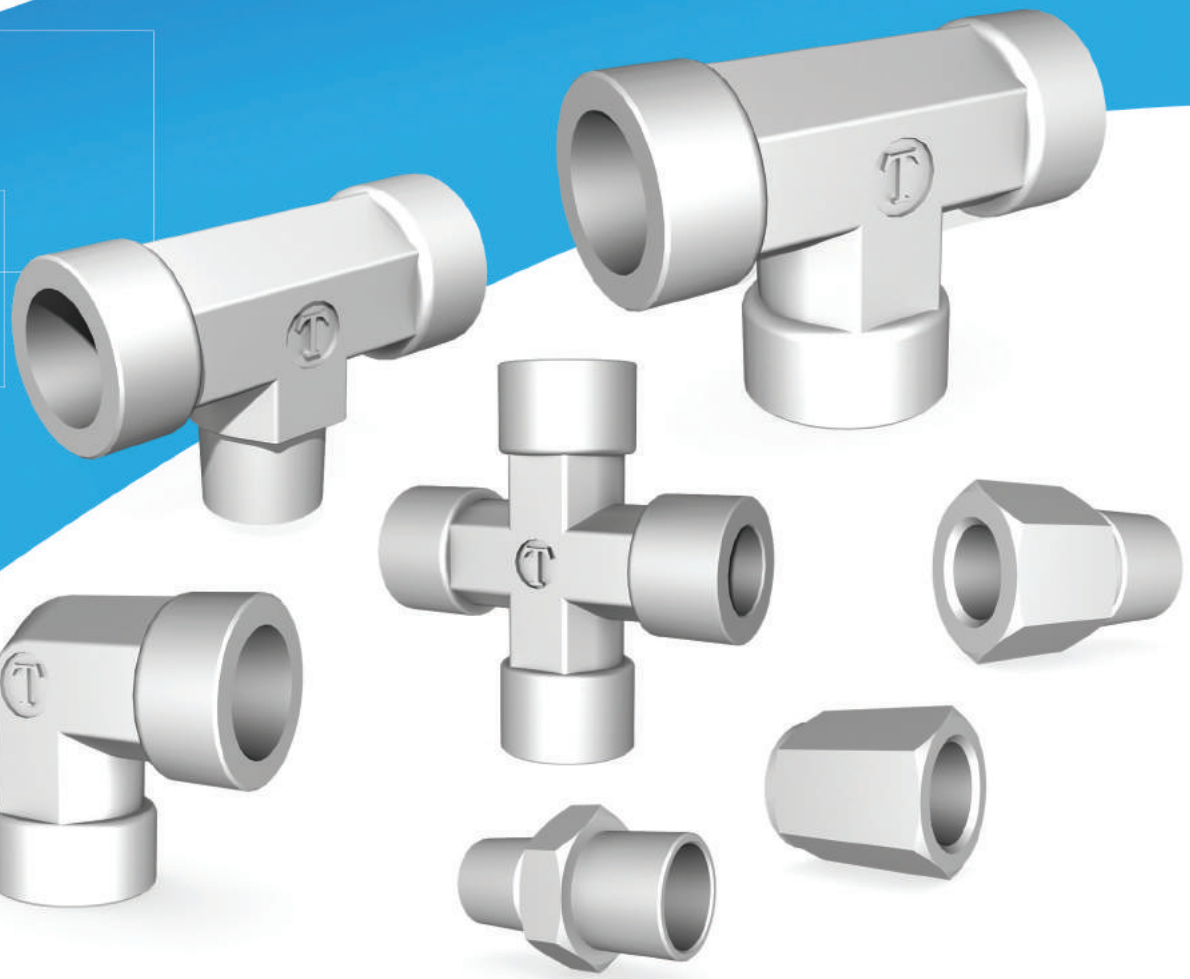

TP SERIES

- Precision pipe fittings for instrumentation and process control
- Nom. Pipe Size from 1/8 to 1inch is available
- Standard materials are Stainless Steel 316, Brass

TK-FUJIKIN CORPORATION
Fujikin Carp Group

INDEX

INSTRUMENT THREAD FITTINGS

INSTRUMENT WELD FITTINGS

ORDERING INFORMATION

	—	TP	—	HRN	—	8	N	—	8	N
1		2		3		4	5		4	5

1. MATERIAL DESIGNTOR

Material	Designator
Stainless Steel 316/316L	Blank
Brass	B

2. PIPE FITTING

3. FITTING TYPE

Instrument Weld Fittings	
Description	**Designator**
Union	SWU
Union Elbow	SWE
Union Tee	SWT
Union Cross	SWC
Male Connector	SWMC
Female Connector	SWFC
Male Elbow	SWME
Female Elbow	SWFE
Pipe Weld to Tube Socket Weld	PWSW

Instrument Thread Fittings	
Description	**Designator**
Elbow	FE
Street Elbow	SE
Reducing Street Elbow	RSE
Male Elbow	ME
Female Tee	FT
Run Tee	RT
Branch Tee	BT
Male Tee	MT
Cross	FC
Hex Coupling	HC
Hex Reducing Coupling	HRC
Pipe CAP	C
Pipe Plug	P
Close Nipple	CN
Hex Nipple	HN
Hex Reducing Nipple	HRN
Hex Long Nipple	HLN
Adapter	A
Reducing Adapter	RA
Reducing Bushing	RB

4. CONNECTION SIZE

Size	Designator
1/8	2
1/4	4
3/8	6
1/2	8
3/4	12
1	16

5. CONNECTION TYPE

Description	Designator
NPT	N
ISO Tapered	P
ISO Parallel	RS
Male Tube Weld	TW
Tube Socket Weld	SW
Male Pipe Weld	PW

TECHNICAL DATA

FEATURES

- All fittings have a high-quality appearance.
- Wrench flat body design allowing standard Hex. Wrench assembly.
- Much less-weight design compared to Class 3000 pipe fittings.
- Male pipe theads capped for protection from damages.

MATERIALS

Description	Bar Stock	Forgings
"Stainless Steel, 316/316L, 304/304L"	"ASTM A276, ASME SA276 ASTM A479, ASME SA479"	ASTM A182 ASME SA182
Brass	JIS C3604 ASTM B16 Alloy 360 ASTM B453 Alloy 345	JIS C3771 ASTM B283 Alloy 377 ASTM B124 Alloy 377

TUBING TEMPERATURE RANGES

Material	Temperature Range
Stainless Steel	-321°F to 1200°F (-196°C to 649°C)
Brass	-65°F to 400°F (-54°C to 204°C)

ALLOWABLE WORKING TEMPERATURE

When Elastomer seal is used in the fitting, care must be taken for allowble working temperature.

Coponent	Elastomer seal material	Working Temperature
O-Ring	NBR (Perbunan®)	-40°F to 212°F (-40°C to 100°C)
	FKM (Viton®)	-15°F to 450°F (-26°C~232°C)
Bonded Gasket	NBR (Perbunan®)	-40°F to 212°F (-40°C to 100°C)
	FKM (Viton®)	-15°F to 450°F (-26°C~232°C)
PTFE Tape	PTFE (Teflon®)	-65°F to 450°F (-54°C to 232°C)

MAXIMUM ALLOWABLE WORKING PRESSURE

Size Designator	NPT/ISO Pipe Size	Stainless Steel				Brass			
		Male		Female		Male		Female	
		psig	bar	psig	bar	psig	bar	psig	bar
2	1/8	10,000	689	6,500	447	5,000	344	3,200	220
4	1/4	8,000	551	6,600	454	4,000	275	3,300	227
6	3/8	7,800	537	5,300	365	3,900	268	2,600	179
8	1/2	7,700	530	4,900	337	3,800	261	2,400	165
12	3/4	7,300	502	4,600	316	3,600	248	2,300	158
16	1	5,300	365	4,400	303	2,600	179	2200	151

- According to the requirements of ASME B31.3(Process Piping Code)
- Allowable working pressures are calculated from an allowable stress value of 20,000psi for S316
  10,000psi for Brass (at -20 to 100°F(-28 to 37°C))
- To determine the working pressure of ASME B31.1 Power Piping Code, multiply the ASME B31.3 rating by 0.94.
  Brass pressure ratings remain the same.

TEMPERATURE DERATING FACTORS

Temperature		Materials		Temperature			
°F	°C	316 / 316L	Copper	°F	°C	316 / 316L	Copper
100	38	1	1	700	371	0.82	-
200	93	1	0.8	800	426	0.79	-
300	149	1	0.78	900	482	0.78	-
400	204	0.96	0.5	1000	537	0.76	-
500	260	0.9	-	1100	593	0.62	-
600	315	0.85	-	1200	649	0.37	-

- To determine allowable pressure at higher temperature, multiply allowable working pressure from
  'MAXIMUM ALLOWABLE WORKING PRESSURE' by factors shown in 'TEMPERATURE DERATING FACTORS'

INSTRUMENT THREAD FITTINGS

CLOSE NIPPLE

TPCN

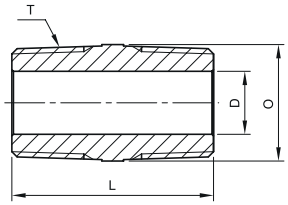

Male NPT Thread

Part No.	T NPT	L	D	O
TPCN - 2N	1/8	19.05	4.8	12.5
TPCN - 4N	1/4	28.4	7.1	14
TPCN - 6N	3/8	28.4	9.6	17.55
TPCN - 8N	1/2	31.7	11.9	22
TPCN - 12N	3/4	31.7	15.7	28.6
TPCN - 16N	1	47.8	22.3	35

HEX. NIPPLE

TPHN

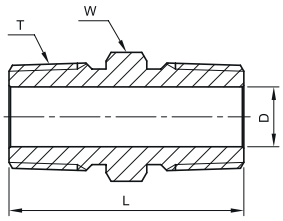

Male NPT Thread

Part No.	T NPT	L	D	W Hex. Flat
TPHN - 2N	1/8	25.4	4.8	11.1
TPHN - 4N	1/4	35.3	7.1	14.2
TPHN - 6N	3/8	36.1	9.6	17.4
TPHN - 8N	1/2	46.7	11.9	22.2
TPHN - 12N	3/4	46.7	15.7	26.9
TPHN - 16N	1	58.7	22.3	34.9

HEX. NIPPLE

TPHN

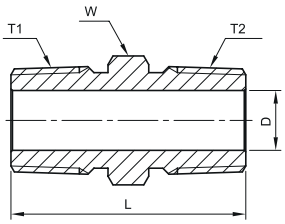

Male NPT Thread

Part No.	T1 NPT	T2 ISO	L	D	W Hex. Flat
TPHN - 2N - 2P	1/8	1/8	24.6	4.1	11.1
TPHN - 4N - 4P	1/4	1/4	35.6	6.4	14.2
TPHN - 6N - 6P	3/8	3/8	36.3	9.7	17.4
TPHN - 8N - 8P	1/2	1/2	46	11.9	22.2
TPHN - 12N - 12P	3/4	3/4	46.7	15.7	26.9
TPHN - 16N - 16P	1	1	58.9	22.4	34.9

HEX. NIPPLE

TPHN

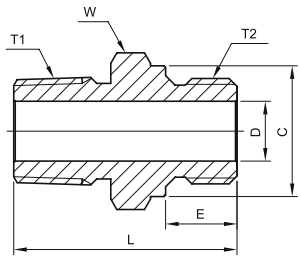

Male NPT to Male ISO Parallel Pipe Thread

Part No.	T1 NPT	T2 ISO	L	I	C	D	W Hex. Flat
TPHN - 2N - 2RS	1/8	G1/8	27.4	7.1	13.7	4.1	14.20
TPHN - 4N - 4RS	1/4	G1/4	36.8	11.2	17.8	5.8	19.05
TPHN - 6N - 6RS	3/8	G3/8	37.6	11.2	21.8	7.4	22.20
TPHN - 8N - 8RS	1/2	G1/2	45.0	14.2	26.1	11.9	26.90
TPHN - 12N - 12RS	3/4	G3/4	49.0	15.7	31.5	15.7	33.30
TPHN - 16N - 16RS	1	G1	56.9	18.3	38.9	19.8	41.00

HEX. REDUCING NIPPLE

TPHRN

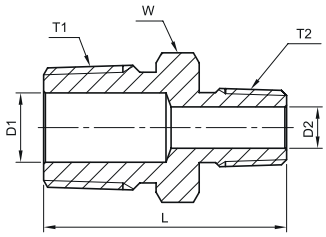

Male NPT Thread

Part No.	T1 NPT	T2 NPT	L	D1	D2	W Hex. Flat
TPHRN - 4N - 2N	1/4	1/8	30.7	7.1	4.8	14.2
TPHRN - 6N - 2N	3/8	1/2	32.0	9.6	4.8	17.4
TPHRN - 6N - 4N	1/8	1/4	36.1	9.6	7.1	17.4
TPHRN - 8N - 2N	1/2	1/8	37.2	11.9	4.8	22.2
TPHRN - 8N - 4N	1/2	1/4	41.7	11.9	7.1	22.2
TPHRN - 8N - 6N	1/2	3/8	41.7	11.9	9.6	22.2
TPHRN - 12N - 4N	3/4	1/4	41.7	15.7	7.1	26.9
TPHRN - 12N - 8N	3/4	1/2	46.7	15.7	11.9	26.9
TPHRN - 16N - 4N	1	1/4	49.3	22.3	7.1	34.9
TPHRN - 16N - 8N	1	1/2	54.1	22.3	11.9	34.9

HEX. LONG NIPPLE

TPHLN

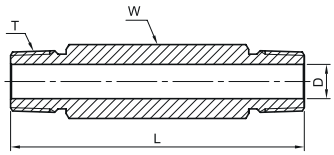

Male NPT Thread

Part No.	T NPT	L	D	W Hex. Flat
TPHLN - 2N	1/8	*	4.8	11.1
TPHLN - 4N	1/4	*	7.1	14.2
TPHLN - 6N	3/8	*	9.6	17.4
TPHLN - 8N	1/2	*	11.9	22.2
TPHLN - 12N	3/4	*	15.7	26.9
TPHLN - 16N	1	*	22.3	34.9

* Specified length to be showm as last designator in part number
Example : TPHLN - 4N -51L (51mm=2"Length)

ADAPTER

TPA

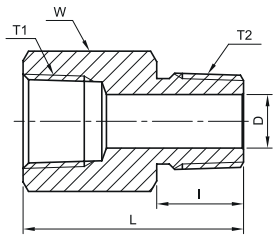

Female NPT To Male ISO Tapered

Part No.	T1 NPT	T2 ISO	L	I	D	W Hex. Flat
TPA - 2N - 2P	1/8	1/8	27.4	9.7	4.8	14.2
TPA - 4N - 4P	1/4	1/4	35.8	14.2	7.1	19.05
TPA - 6N - 6P	3/8	3/8	37.6	14.2	9.7	22.2
TPA - 8N - 8P	1/2	1/2	49	19.1	11.9	26.9
TPA - 12N - 12P	3/4	3/4	50.3	19.1	15.7	31.8
TPA - 16N - 16P	1	1	58.0	23.9	22.3	41.2

ADAPTER

TPA

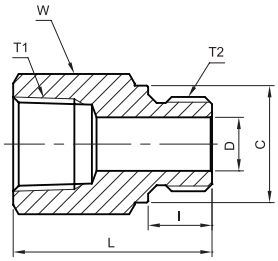

Female NPT To Male ISO Parallel Pipe Thread

Part No.	T1 NPT	T2 ISO	L	I	C	D	W Hex. Flat
TPA - 2N - 2RS	1/8	G1/8	25.1	7.1	14.7	4.1	14.2
TPA - 4N - 4RS	1/4	G1/4	33.5	11.2	18.0	5.8	19.05
TPA - 6N - 6RS	3/8	G3/8	35.8	11.2	21.6	7.4	22.2
TPA - 8N - 8RS	1/2	G1/2	44.2	14.2	25.9	11.9	26.9
TPA - 12N - 12RS	3/4	G3/4	48.0	15.7	32.0	15.7	31.8
TPA - 16N - 16RS	1	G1	53.3	18.3	38.9	19.8	41.2

ADAPTER

TPA

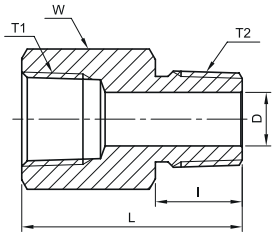

Female To Male NPT Thread

Part No.	T1 NPT	T2 NPT	L	D	W Hex. Flat
TPA - 2N	1/8	1/8	27.4	4.8	14.2
TPA - 4N	1/4	1/4	35.6	7.1	19.05
TPA - 6N	3/8	3/8	37.8	9.6	22.2
TPA - 8N	1/2	1/2	49	11.9	26.9
TPA - 12N	3/4	3/4	50.3	15.7	31.7
TPA - 16N	1	1	58	22.3	41.2

REDUCING ADAPTER

TPRA

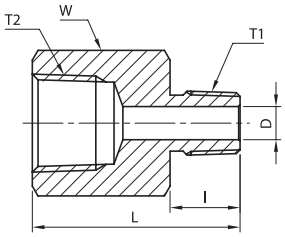

Male To Female NPT Thread

Part No.	T1 NPT	T2 NPT	L	D	W Hex. Flat
TPRA - 2N - 4N	1/8	1/4	31.5	4.8	19.05
TPRA - 2N - 6N	1/8	3/8	33.5	4.8	22.2
TPRA - 4N - 6N	1/4	3/8	37.8	7.1	22.2
TPRA - 2N - 8N	1/8	1/2	40.0	4.8	26.9
TPRA - 4N - 8N	1/4	1/2	44.5	7.1	26.9
TPRA - 6N - 8N	3/8	1/2	44.5	9.6	26.9
TPRA - 4N - 12N	1/4	3/4	45.7	7.1	31.8
TPRA - 6N - 12N	3/8	3/4	45.7	9.6	31.8
TPRA - 8N - 12N	1/2	3/4	51.3	11.9	31.8
TPRA - 4N - 16N	1/4	1	50.8	7.1	41.2
TPRA - 8N - 16N	1/2	1	55.3	11.9	41.2

HEX. BUSHING

TPRB

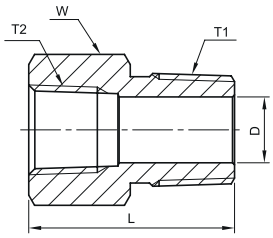

Male To Female NPT Thread

Part No.	T1 NPT	T2 NPT	L	D	W Hex. Flat
TPRB - 4N - 2N	1/4	1/8	26.7	7.1	14.2
TPRB - 6N - 2N	3/8	1/8	21.8	8.5	17.4
TPRB - 6N - 4N	3/8	1/4	30	9.6	19.05
TPRB - 8N - 2N	1/2	1/8	27.4	8.5	22.2
TPRB - 8N - 4N	1/2	1/4	27.4	11.7	22.2
TPRB - 8N - 6N	1/2	3/8	35.6	11.9	22.2
TPRB - 12N - 4N	3/4	1/4	27.4	11.4	26.9
TPRB - 12N - 6N	3/4	3/8	27.4	15	26.9
TPRB - 12N - 8N	3/4	1/2	41.4	15.7	26.9
TPRB - 16N - 4N	1	1/4	34.8	11.4	34.9
TPRB - 16N - 8N	1	1/2	34.8	18.5	34.9
TPRB - 16N - 12N	1	3/4	47	22.4	34.9

HEX. COUPLING

TPHC

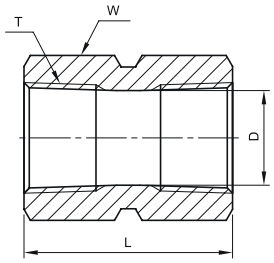

Female NPT Thread

Part No.	T NPT	L	D	W Hex. Flat
TPHC - 2N	1/8	20.3	8.5	14.2
TPHC - 4N	1/4	30	11.1	19.05
TPHC - 6N	3/8	33	14.5	22.2
TPHC - 8N	1/2	39.4	17.9	26.9
TPHC - 12N	3/4	41	23.2	31.8
TPHC - 16N	1	50.5	29.2	41.2

HEX. REDUCING COUPLING

TPHRC

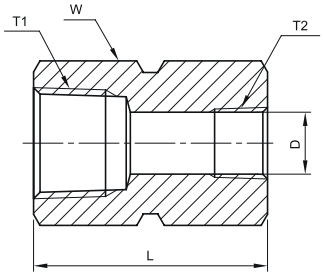

Female NPT to Reduced Female NPT

Part No.	T1 NPT	T2 NPT	L	D	W Hex. Flat
TPHRC - 4N - 2N	1/4	1/8	31.2	8.9	19.05
TPHRC - 6N - 4N	3/8	1/4	34.8	11.7	22.2
TPHRC - 8N - 2N	1/2	1/8	39.4	8.9	26.9
TPHRC - 8N - 4N	1/2	1/4	44.2	11.7	26.9
TPHRC - 8N - 6N	1/2	3/8	45	15	26.9
TPHRC - 12N - 4N	3/4	1/4	45.7	11.7	31.8
TPHRC - 12N - 8N	3/4	1/2	52	18.7	31.8
TPHRC - 16N - 4N	1	1/4	50.8	11.7	41.2
TPHRC - 16N - 8N	1	1/2	55.4	18.7	41.2
TPHRC - 16N - 12N	1	3/4	57	23.5	41.2

PIPE CAP

TPC

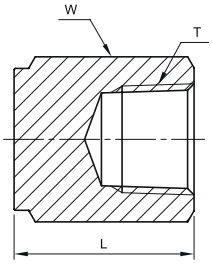

Female NPT.

Part No.	T NPT	L	W Hex. Flat
TPC - 2N	1/8	19.1	14.2
TPC - 4N	1/4	22.9	19.05
TPC - 6N	3/8	26.2	22.2
TPC - 8N	1/2	34	26.9
TPC - 12N	3/4	36.6	31.8
TPC - 16N	1	41.1	41.2

PIPE PLUG

TPP

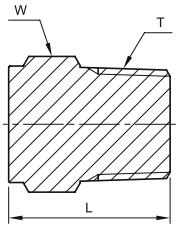

Male NPT Thread

Part No.	T NPT	L	W Hex. Flat
TPP - 2N	1/8	19.05	11.1
TPP - 4N	1/4	24.1	14.2
TPP - 6N	3/8	25	17.4
TPP - 8N	1/2	30.5	22.2
TPP - 12N	3/4	30.5	26.9
TPP - 16N	1	38.1	34.9

ELBOW

TPFE

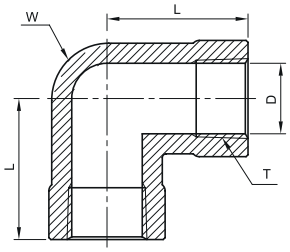

Female NPT Thread

Part No.	T NPT	L	D	W Hex. Flat
TPFE - 2N	1/8	24	8.5	12.7
TPFE - 4N	1/4	29	11.1	17.5
TPFE - 6N	3/8	34.5	14.5	20.6
TPFE - 8N	1/2	37	17.9	25.4
TPFE - 12N	3/4	46.5	23.2	31.8
TPFE - 16N	1	48.8	29.2	42.9

STREET ELBOW

TPSE

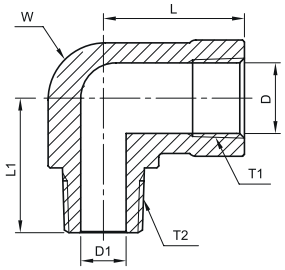

Female to Male NPT Thread

Part No.	T1 NPT	T2 NPT	L	L1	D	D1	W Hex. Flat
TPSE - 2N	1/8	1/8	24.1	19.6	8.5	4.8	12.7
TPSE - 4N	1/4	1/4	29	26.5	11.1	7.1	17.5
TPSE - 6N	3/8	3/8	34.5	28.2	14.5	9.6	20.6
TPSE - 8N	1/2	1/2	37	35.3	17.9	11.9	25.4
TPSE - 12N	3/4	3/4	46.5	39.6	23.2	15.7	31.8
TPSE - 16N	1	1	48.8	49.2	29.2	22.3	42.9

REDUCING STREET ELBOW

TPRSE

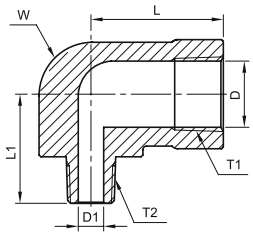

Female to Male NPT Thread

Part No.	T1 NPT	T2 NPT	L	L1	D	D1	W Hex. Flat	W Hex. Flat
TPRSE - 4N - 2N	1/4	1/8	29	22.4	8.5	4.8	17.5	17.5
TPRSE - 6N - 4N	3/8	1/4	34.5	28.2	11.1	7.1	20.6	20.6
TPRSE - 8N - 4N	1/2	1/4	37	30.5	14.5	7.1	25.4	25.4
TPRSE - 8N - 6N	1/2	3/8	37	30.5	17.9	9.6	25.4	25.4
TPRSE - 12N - 8N	3/4	1/2	46.5	39.6	23.2	11.9	31.8	31.8
TPRSE - 16N - 8N	1	1/2	48.8	44.5	29.2	11.9	42.9	42.9

MALE ELBOW

TPME

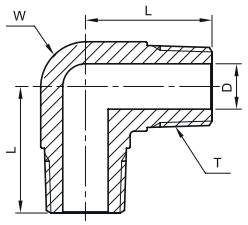

Male NPT Thread

Part No.	T NPT	L	D	W Hex. Flat
TPME - 2N	1/8	19.05	4.8	12.7
TPME - 4N	1/4	24.5	7.1	12.7
TPME - 6N	3/8	26.9	9.6	17.5
TPME - 8N	1/2	33.2	11.9	20.6
TPME - 12N	3/4	35.3	15.7	25.4
TPME - 16N	1	44.5	22.3	31.8

FEMALE TEE

TPFT

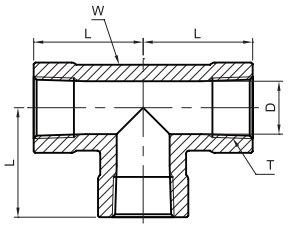

Female NPT Thread

Part No.	T NPT	L	D	W Hex. Flat
TPFT - 2N	1/8	24	8.5	12.7
TPFT - 4N	1/4	29	11.1	17.5
TPFT - 6N	3/8	34.5	14.5	20.6
TPFT - 8N	1/2	37	17.9	25.4
TPFT - 12N	3/4	46.5	23.2	31.8
TPFT - 16N	1	48.8	29.2	42.9

RUN TEE

TPRT

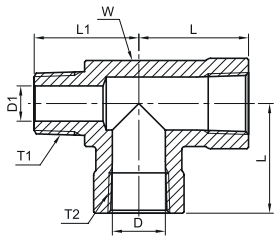

Female to Male to Female NPT Thread

Part No.	T1 NPT	T2 NPT	L	L1	D	D1	W Hex. Flat
TPRT - 2N	1/8	1/8	24	19.6	8.5	4.8	12.7
TPRT - 4N	1/4	1/4	29	26.5	11.1	7.1	17.5
TPRT - 6N	3/8	3/8	34.5	28.2	14.5	9.6	20.6
TPRT - 8N	1/2	1/2	37	35.3	17.9	11.9	25.4
TPRT - 12N	3/4	3/4	46.5	39.6	23.2	15.7	31.8
TPRT - 16N	1	1	48.8	49.2	29.2	22.3	42.9

BRANCH TEE

TPBT

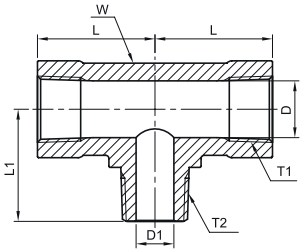

Female to Female to Male NPT Thread

Part No.	T1 NPT	T2 NPT	L	L1	D	D1	W Hex. Flat
TPBT - 2N	1/8	1/8	24	19.6	8.5	4.8	12.7
TPBT - 4N	1/4	1/4	29	26.5	11.1	7.1	17.5
TPBT - 6N	3/8	3/8	34.5	28.2	14.5	9.6	20.6
TPBT - 8N	1/2	1/2	37	35.3	17.9	11.9	25.4
TPBT - 12N	3/4	3/4	46.5	39.6	23.2	15.7	31.8
TPBT - 16N	1	1	48.8	49.2	29.2	22.3	42.9

MALE TEE

TPMT

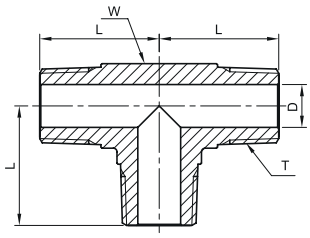

Male NPT Thread

Part No.	T NPT	L	D	W Hex. Flat
TPMT - 2N	1/8	19.05	4.8	12.7
TPMT - 4N	1/4	24.5	7.1	12.7
TPMT - 6N	3/8	26.9	9.6	17.5
TPMT - 8N	1/2	33.2	11.9	20.6
TPMT - 12N	3/4	35.3	15.7	25.4
TPMT - 16N	1	44.5	22.3	31.8

CROSS

TPFC

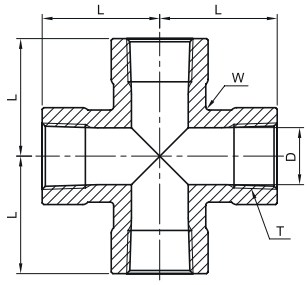

Female NPT Thread

Part No.	T NPT	L	D	W Hex. Flat
TPFC - 2N	1/8	24	8.5	12.7
TPFC - 4N	1/4	29	11.1	17.5
TPFC - 6N	3/8	34.5	14.5	20.6
TPFC - 8N	1/2	37	17.9	25.4
TPFC - 12N	3/4	46.5	23.2	31.8
TPFC - 16N	1	48.8	29.2	42.9

INSTRUMENT WELD FITTINGS

UNION

TPSWU

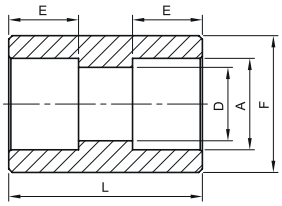

Part No.	A Tube O.D	L	F	D	E	Working Pressure Stainless Steel 316/316L	
						psig	bar
TPSWU - 4TW	1/4	19.1	13	4.6	7.1	10,000	689
TPSWU - 6TW	3/8	22.4	15.8	7.1	7.9	7,600	523
TPSWU - 8TW	1/2	26.9	19	10.2	9.7	6,200	427
TPSWU - 10TW	5/8	30.2	24	12.7	10.4	6,400	440
TPSWU - 12TW	3/4	33.3	26.9	15.7	11.2	5,500	378
TPSWU - 16TW	1	36.6	35	22.1	15.7	5,200	358

UNION ELBOW

TPSWE

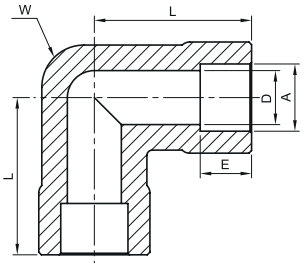

Part No.	A Tube O.D	L	D	E	W Hex. Flat	Working Pressure Stainless Steel 316/316L	
						psig	bar
TPSWE - 4TW	1/4	21.8	4.6	7.1	11.1	11,300	778
TPSWE - 6TW	3/8	26.4	7.1	7.9	12.7	8,400	578
TPSWE - 8TW	1/2	29.7	10.2	9.7	17.4	7,800	537
TPSWE - 10TW	5/8	36.1	12.7	10.4	20.6	6,700	461
TPSWE - 12TW	3/4	37	15.7	11.2	25.4	6,700	461
TPSWE - 16TW	1	46.5	22.1	15.7	31.8	6,100	420

UNION TEE

TPSWT

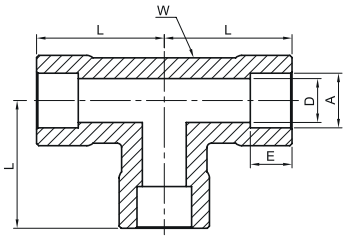

Part No.	A Tube O.D	L	D	E	W Hex. Flat	Working Pressure Stainless Steel 316/316L	
						psig	bar
TPSWT - 2TW	1/8	15	2.3	2.5	11.1	11,800	813
TPSWT - 4TW	1/4	21.8	4.6	7.1	11.1	11,300	778
TPSWT - 6TW	3/8	26.4	7.1	7.9	12.7	8,400	578
TPSWT - 8TW	1/2	29.7	10.2	9.7	17.4	7,800	537
TPSWT - 10TW	5/8	36.1	12.7	10.4	20.6	6,700	461
TPSWT - 12TW	3/4	37	15.7	11.2	25.4	6,700	461
TPSWT - 16TW	1	46.5	22.1	15.7	31.8	6,100	420

UNION CROSS

TPSWC

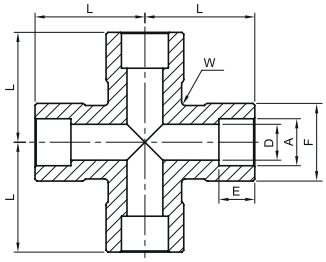

Part No.	A Tube O.D	L	F	D	E	W Hex. Flat	Working Pressure Stainless Steel 316/316L	
							psig	bar
TPSWC - 4TW	1/4	21.8	13.4	4.6	7.1	11.1	11,300	778
TPSWC - 6TW	3/8	26.4	15.8	7.1	7.9	12.7	8,400	578
TPSWC - 8TW	1/2	29.7	20.6	10.2	9.7	17.4	7,800	537
TPSWC - 12TW	3/4	37	28.6	15.7	11.2	25.4	6,700	461
TPSWC - 16TW	1	46.5	35	22.1	15.7	31.8	6,100	420

MALE CONNECTOR

TPSWMC

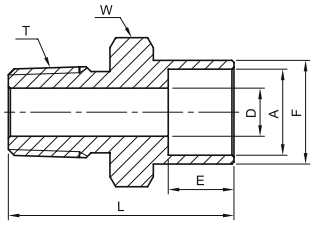

Part No.	A Tube O.D	T NPT	L	F	D	E	W Hex. Flat	Working Pressure Stainless Steel 316/316L	
								psig	bar
TPSWMC - 4TW - 4N	1/4	1/4	29.2	12.2	4.6	7.1	14.2	7,500	516
TPSWMC - 6TW - 4N	3/8	1/4	31.8	15.3	7.1	7.9	15.8	7,500	516
TPSWMC - 6TW - 6N	3/8	3/8	1.8	15.3	7.1	7.9	17.4	7,300	502
TPSWMC - 6TW - 8N	3/8	1/2	37.3	15.3	7.1	7.9	22.2	7,200	496
TPSWMC - 8TW - 4N	1/2	1/4	33.3	18.5	7.1	7.9	19.05	6,200	427
TPSWMC - 8TW - 6N	1/2	3/8	33.3	18.5	9.4	7.9	19.05	6,200	427
TPSWMC - 8TW -8N	1/2	1/2	38.9	18.5	10.2	7.9	22.20	6,200	427

FEMALE CONNECTOR

TPSWFC

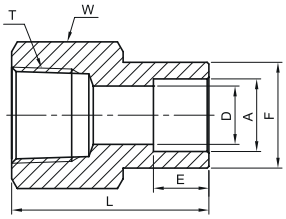

Part No.	A Tube O.D	T NPT	L	F	D	E	W Hex. Flat	Working Pressure Stainless Steel 316/316L	
								psig	bar
TPSWFC - 2TW - 2N	1/8	1/8	21.1	7.4	2.3	2.5	14.2	6,100	420
TPSWFC - 4TW - 2N	1/4	1/8	26.7	12.2	4.6	4.6	14.2	6,100	420
TPSWFC - 4TW - 4N	1/4	1/4	30.0	12.2	4.6	4.6	19.05	6,200	427
TPSWFC - 6TW - 4N	3/8	1/4	31.5	15.3	7.1	7.1	19.05	6,200	427
TPSWFC - 8TW - 6N	1/2	3/8	34.5	18.5	10.2	10.2	22.2	5,000	344
TPSWFC - 8TW - 8N	1/2	1/2	40.4	18.5	10.2	10.2	26.9	4,600	316
TPSWFC - 10TW - 8N	5/8	1/2	41.9	23.4	12.7	12.7	24.9	4,600	316
TPSWFC - 12TW - 12N	3/4	3/4	43.9	26.4	15.7	15.7	33.3	4,300	296

MALE ELBOW

TPSWME

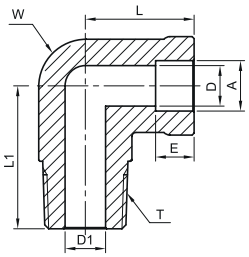

Part No.	A Tube O.D	T NPT	L	L1	D	D1	E	W Hex. Flat	Working Pressure Stainless Steel 316/316L	
									psig	bar
TPSWME - 4TW - 4N	1/4	1/4	20.1	26.7	4.6	7.1	7.1	12.7	7,500	516
TPSWME - 6TW - 4N	3/8	1/4	26.4	26.7	7.1	7.1	7.9	12.7	7,500	516
TPSWME - 6TW - 6N	3/8	3/8	24.6	29.7	7.1	9.6	7.9	17.4	7,300	502
TPSWME - 6TW - 8N	3/8	1/2	25.9	36	7.1	11.9	7.9	20.6	7,200	496
TPSWME - 8TW - 8N	1/2	1/2	27.4	36	10.2	11.9	9.7	20.6	6,200	427
TPSWME - 12TW - 12N	3/4	3/4	37	37	15.7	15.7	11.2	25.4	6,700	461

FEMALE ELBOW

TPSWFE

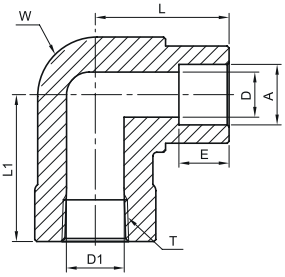

Part No.	A Tube O.D	T NPT	L	L1	D	D1	E	W Hex. Flat	Working Pressure Stainless Steel 316/316L	
									psig	bar
TPSWFE - 4TW - 4N	1/4	1/4	22.9	29.7	4.8	11.1	7.1	17.4	6,200	427
TPSWFE - 6TW - 4N	3/8	1/4	25.1	29.7	7.1	11.1	7.9	17.4	7,000	482
TPSWFE - 6TW - 8N	3/8	1/2	28.7	37	7.1	17.9	7.9	25.4	5,400	372
TPSWFE - 8TW - 8N	1/2	1/2	30.2	37	10.2	17.9	9.7	25.4	5,400	372

PIPE WELD TO TUBE SOCKET WELD

TPPWSW

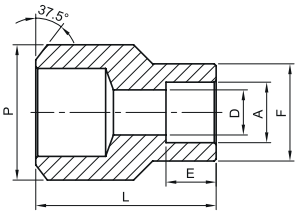

Part No.	p Pipe O.D	A Tube O.D	L	F	D	E	Working Pressure Stainless Steel 316/316L	
							psig	bar
TPPWSW- 4PW - 4TW	1/4	1/4	22.4	13.7	4.6	7.1	9,600	661
TPPWSW- 6PW - 6TW	3/8	3/8	26.2	15.3	7.1	7.9	7,600	523
TPPWSW- 6PW - 8TW	3/8	1/2	27.9	18.5	10.2	9.7	6,200	427
TPPWSW- 8PW - 4TW	1/2	1/4	28.4	12.2	4.6	7.1	7,300	502
TPPWSW- 8PW - 6TW	1/2	3/8	28.4	15.3	7.1	7.9	7,300	502
TPPWSW- 8PW - 8TW	1/2	1/2	30.2	18.5	10.2	9.7	6,200	427
TPPWSW- 12PW - 6TW	3/4	3/8	38.1	15.3	7.1	7.9	6,200	427
TPPWSW- 12PW - 8TW	3/4	1/2	38.1	18.5	10.2	9.7	6,200	427

* The wall thickness of welding edge is based on SCH80.

TUBE WELD TO TUBE SOCKET WELD

TPSWTW

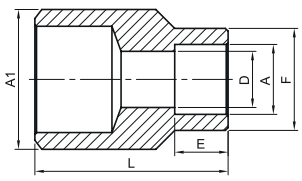

Part No.	A1 Tube O.D	A Tube O.D	L	F	D	E	Working Pressure Stainless Steel 316/316L	
							psig	bar
TPSWTW - 4TW - 2TW	1/4	1/8	14.2	7.4	2.3	2.5	11,800	813
TPSWTW - 6TW - 4TW	3/8	1/4	19.1	12.2	4.6	7.1	7,700	530
TPSWTW - 8TW - 4TW	1/2	1/4	22.4	18.2	4.6	7.1	7,000	482
TPSWTW - 8TW - 6TW	1/2	3/8	22.4	15.7	8.1	7.9	7,000	482
TPSWTW - 12TW - 8TW	3/4	1/2	28.4	18.5	10.2	9.7	5,900	406
TPSWTW - 16TW - 8TW	1	1/2	35.1	18.5	10.2	9.7	5,600	344

MEMO

GENERAL INDUSTRIAL PRODUCTS

VALVES & OTHERS

One-piece Ball Valves
Three Pieces Ball Valves
Hex Ball Valves
Trunnion Ball Valves
Forged High Pressure Ball Valve
Plug Valves
Toggle Valves
Check Valves
Relief Valves
Integral Bonnet Needle Valves
Union Bonnet Needle Valves
Manifold Valves
Gauge Valves
Water Regulators
Condensate Pot




One-Piece Ball Valves

IBL SERIES

- Maximum Working Pressure : 3,000 psig (206 bar) @ 100˚F (37˚C)
- Working Temperature Range : 50˚F(10˚C) to 150˚F(65˚C)

Every IBL Series ball valve is leak tested at 1,000PSIG before packaging.
And please contact TK-Fujikin or your authorized TK-Fujikin representative
if your usage pressure of these valves exceeds 1,000PSIG.

TK-FUJIKIN CORPORATION
Fujikin Carp Group

ORDERING INFORMATION

SS	—	IBL1	A	D	—	4SW	—	BL
1		2	3	4		5		6

1. BODY MATERIAL

Material	Designator
316 SS	SS

2. VALVE SERIES

Orifice Size	Designator
1.3mm, 2.4mm, 3.2mm	IBL1
4.8mm	IBL2
7.1mm	IBL3
10.3mm	IBL4

* The Orifice Size is determined using valves with TKF tube fitting end connections.
* For more details, See the Dimensions Table.

3. BODY PATTERN

Body Pattern	Designator
2-Way Straight (Standard)	Blank
2-Way Angle	A
3-Way	3

4. VENT PORT OPTION

Vent Port Option	Designator
Without	Blank
Downstream Vent	D
Upstream Vent	U

5. INLET/OUTLET CONNECTION SIZE & TYPE

Inlet/Outlet Connection Size	Designator
1/16″	1
1/8″	2
1/4″	4
3/8″	6
1/2″	8
3mm	3M
6mm	6M
8mm	8M
10mm	10M
12mm	12M

Inlet/Outlet Connection Type	Designator
Lok	SW
Male NPT	NM
Female NPT	NF
Male ISO①Tapered	PTM
Female ISO①Tapered	PTF
MFS Male	VM

① Refer to specifications ISO 7/1, BS EN 10226-1, DIN-2999, and JIS B0203.

6. HANDLE TYPE

Handle Type	Designator
Black nylon Handle (Standard)	Blank
Blue nylon Handle	BL
Green nylon Handle	GR
Orange nylon Handle	OG
Red nylon Handle	RD
Yellow nylon Handle	YW
nylon Oval Handle	O
Metal Handle (Stainless Steel Bar)	S
Metal Handle (Aluminum Bar)	A

FEATURES

- Simple design with one piece body
- Tight and smooth, low torque and easy operation
- One - piece ball stem
- Panel mountable
- Variety of End Connections
- Straight, Angle and 3 - Way flow patterns
- Each and every valve is tested at the factory

TECHNICAL DATA

TEMPERATURE - WORKING PRESSURE RATING

Series	Temperature, °F (°C)	Straight Pattern (2-Way)	Angle Pattern (2-Way)	Switching Pattern (3-Way)	Seat Material
IBL1	50 (10) ~ 150 (65)	2,500 psig (172 bar)	2,500 psig (172 bar)	2,500 psig (172 bar)	PTFE
IBL 2		3,000 psig (206 bar)	2,500 psig (172 bar)	2,500 psig (172 bar)	
IBL3		2,500 psig (172 bar)	1,500 psig (103 bar)	1,500 psig (103 bar)	
IBL4		2,500 psig (172 bar)	1,500 psig (103 bar)	1,500 psig (103 bar)	

TEMPERATURE - WORKING PRESSURE RATING

Flow Coefficient (Cv)	Pressure Drop Atmosphere (Δp), psi (bar)					
	10 (0.68)	50 (3.4)	100 (6.8)	10 (0.68)	50 (3.4)	100 (6.8)
	Air Flow std ft3 / min (std L / min)			Water Flow U. S. gal / min (std L / min)		
0.05	0.6 (16)	1.5 (42)	2.6 (73)	0.1 (0.3)	0.3 (1.1)	0.5 (1.8)
0.06	0.7 (19)	1.8 (50)	3.2 (90)	0.2 (0.7)	0.4 (1.5)	0.6 (2.2)
0.07	0.8 (22)	2.1 (59)	3.7 (100)	0.2 (0.7)	0.5 (1.8)	0.7 (2.6)
0.08	0.9 (25)	2.4 (67)	4.3 (120)	0.3 (1.1)	0.6 (2.2)	0.8 (3.0)
0.1	1.1 (31)	3.0 (84)	5.3 (150)	0.3 (1.1)	0.7 (2.6)	1.0 (3.7)
0.15	1.7 (48)	4.5 (120)	8.2 (220)	0.4 (1.5)	1.0 (3.7)	1.5 (5.6)
0.2	2.3 (65)	6.0 (160)	11 (310)	0.6 (2.2)	1.4 (5.2)	2.0 (7.5)
0.3	3.4 (96)	9.0 (250)	16 (450)	0.9 (3.4)	2.1 (7.9)	3.0 (11)
0.35	4.0 (110)	10 (280)	19 (530)	1.1 (4.1)	2.4 (9.0)	3.5 (13)
0.5	5.6 (150)	15 (420)	27 (760)	1.6 (6.0)	3.5 (13)	5.0 (18)
0.6	6.8 (190)	18 (500)	32 (900)	1.9 (7.1)	4.2 (15)	6.0 (22)
0.7	7.9 (220)	21 (590)	37 (1,000)	2.2 (8.3)	4.9 (18)	7.0 (26)
0.75	8.5 (240)	22 (620)	40 (1,100)	2.3 (8.7)	5.3 (20)	7.5 (28)
0.8	9.0 (250)	24 (670)	42 (1,100)	2.5 (9.4)	5.6 (21)	8.0 (30)
0.9	10 (280)	27 (760)	48 (1,300)	2.8 (10)	6.4 (24)	9.0 (34)
1.2	14 (390)	36 (1,000)	64 (1,800)	3.8 (14)	8.5 (32)	12 (45)
1.4	16 (450)	42 (1,100)	74 (2,000)	4.4 (16)	9.9 (37)	14 (52)
1.5	17 (480)	45 (1,200)	80 (2,200)	4.7 (17)	11 (41)	15 (56)
1.6	18 (500)	48 (1,300)	85 (2,400)	5.0 (18)	11 (41)	16 (60)
1.7	19 (530)	51 (1,400)	90 (2,500)	5.3 (20)	12 (45)	17 (64)
2	22 (620)	60 (1,600)	100 (2,800)	6.3 (23)	14 (52)	20 (75)
2.4	27 (760)	72 (2,000)	120 (3,300)	7.6 (28)	17 (64)	24 (90)
2.6	29 (820)	78 (2,200)	140 (3,900)	8.2 (31)	18 (68)	26 (98)
3	34 (960)	90 (2,500)	160 (4,500)	9.5 (35)	21 (79)	30 (110)
3.5	39 (1,100)	100 (2,800)	180 (5,000)	11 (41)	25 (94)	35 (130)
3.8	43 (1,200)	110 (3,100)	200 (6,700)	12 (45)	27 (100)	38 (140)
4.6	52 (1,400)	140 (3,900)	240 (6,700)	15 (56)	33 (120)	46 (170)
6	68 (1,900)	180 (5,000)	320 (9,000)	19 (71)	42 (150)	60 (220)
6.3	71 (2,000)	190 (5,300)	330 (9,300)	20 (75)	45 (170)	63 (230)
6.4	72 (2,000)	190 (5,300)	340 (9,600)	20 (75)	45 (170)	64 (240)
12	130 (3,600)	360 (10,000)	640 (18,000)	38 (140)	85 (320)	120 (450)

BALL VALVES |

TESTING

For leakage, Each valve is tested with nitrogen at 1,000psig (69bar)
The leakage shall not exceed 0.1 std cc/min (Max. 0.1 std cc/min)

PACKING ADJUSTMENT

Packing is set for 1000psig (69 bar) service in the factory.
For service in pressure higher than test pressure, The packing must be readjusted to prevent leakage.
Before installation, Packing of the valve exposed to environmental conditions may lose initial packing load.
Therefore, packing adjustment may be recommended for service.

MATERIALS OF CONSTRUCTION

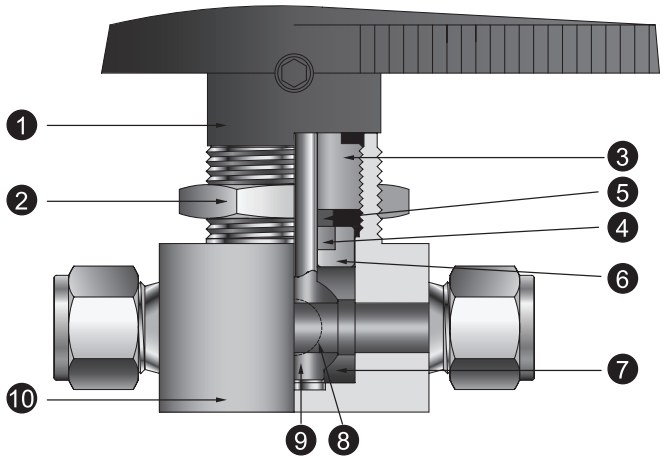

No.	Material Grade / ASTM Specification	
	Description	Material
		Stainless Steel
1	Handle	Nylon6 / ADC6 insert
2	Panel Nut	304 SS / A276
3	Packing Bolt	316 SS / A276
4	Gland Packing	PTFE
5	Packing Ring	316 SS / A276
6	Packing ARM	316 SS / A276
7	Seat1 / Seat2	PTFE
8	Retainer1	316L SS
	Retainer2	
9	Stem	316 SS / A276
10	Body	316 SS / A479

DIMENSIONS

2-WAY VALVE

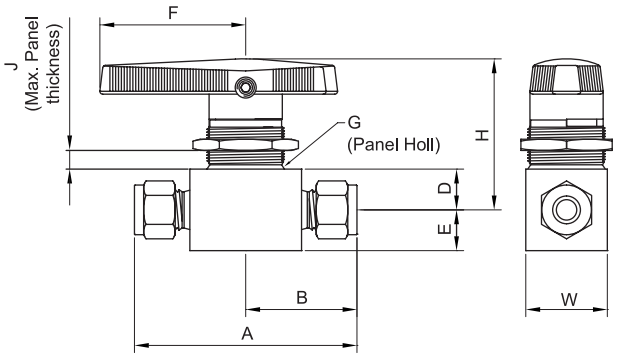

Straight Pattern

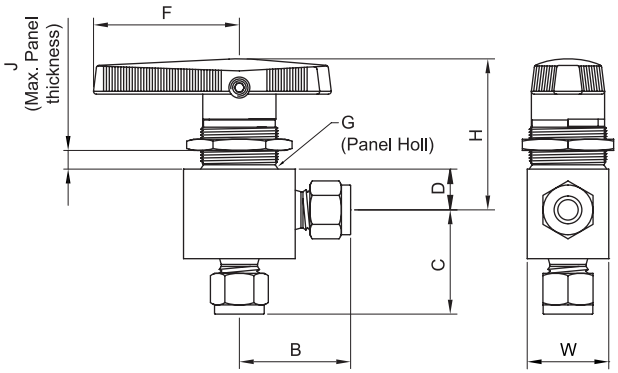

Angle Pattern

Order Number		Orifice in. (mm)	Cv		End Connections		Dimensions in. (mm)									
Series	Part No.		Straight	Angle	Inlet	Outlet	A	B	C	D	E	F	G	J	H	W
IBL1	1SW	0.051 (1.3)	0.1	-	1/16" T-LOK		1.68 (42.7)	0.84 (21.3)	-	0.34 (8.6)	0.28 (7.1)	1.12 (28.4)	0.59 (15.1)	0.25 (6.4)	1.37 (34.7)	0.58 (14.7)
	2SW	0.094 (2.4)	0.2	0.15	1/8" T-LOK		2.01 (51.1)	1.00 (25.5)	0.97 (24.6)							
	3M SW		0.2	0.15	3mm T-LOK											
	4SW	0.126 (3.2)	0.6	0.35	1/4" T-LOK		2.21 (56.1)	1.10 (27.9)	1.07 (27.2)							
	6M SW		0.6	0.35	6mm T-LOK											
	2NF		0.5	0.3	1/8" Female NPT		1.63 (41.4)	0.81 (20.7)	0.81 (20.6)							
IBL2	4SW	0.189 (4.80)	1.4	0.9	1/4" T-LOK		2.36 (59.9)	1.18 (30)	1.17 (29.7)	0.44 (11.2)	0.38 (9.7)	1.53 (38.9)	0.78 (19.8)	0.19 (4.8)	1.56 (39.6)	0.78 (19.8)
	6SW		1.5	0.9	3/8" T-LOK		2.58 (65.5)	1.29 (32.8)	1.29 (32.8)							
	6M SW		1.4	0.9	6mm T-LOK		2.39 (60.7)	1.20 (30.5)	1.17 (29.7)							
	8M SW		1.5	0.9	8mm T-LOK		2.46 (62.5)	1.23 (31.2)	1.20 (30.5)							
	2NF		1.2	0.7	1/8" Female NPT		2.00 (50.8)	1.00 (26.2)	1.00 (25.4)							
	4NF		0.9	0.75	1/4" Female NPT		2.06 (52.3)	1.03 (26.2)	1.03 (26.2)							
	4PTF		0.9	-	1/4" Female ISO[1]		2.06 (52.3)		-							
	4NM		1.2	0.75	1/4" Male NPT		2.00 (50.8)	1.00 (25.4)	1.03 (26.2)							
	4NM	4SW	1.6	0.75	1/4" Male NPT	1/4" T-LOK	2.20 (55.9)	1.17 (29.8)								
IBL3	6SW	0.280 (7.1)	6	2	3/8" T-LOK		3.05 (77.5)	1.52 (38.7)	1.43 (36.3)	0.56 (14.2)	0.56 (14.2)	2.00 (50.8)	1.13 (28.6)	0.37 (9.5)	2.07 (52.6)	1.12 (28.4)
	10M SW		6	2	10mm T-LOK		3.07 (78.0)	1.54 (39.0)								
	4NF		3	1.7	1/4" Female NPT		2.5 (63.5)	1.25 (31.8)	1.25 (31.8)							
	6NF		2.6	1.5	3/8" Female NPT			-								
	6PTF		2.6	-	3/8" Female ISO[1]											
IBL4	8SW	0.406 (10.3)	12	4.6	1/2" T-LOK		3.92 (99.6)	1.96 (49.8)	1.74 (44.2)	0.69 (17.5)	0.69 (17.5)	3.00 (76.2)	1.5 (38.1)		2.43 (61.7)	1.50 (38.1)
	12SW		6.4	3.8	3/4" T-LOK											
	12M SW		12	4.6	12mm T-LOK											
	8NF		6.3	3.5	1/2" Female NPT		3.12 (79.2)	1.56 (39.6)	1.56 (39.6)							
	8PTF		6.3	-	1/2" Female ISO[1]			-								

[1] Refer to specifications ISO 7/1, BS EN 10226-1, DIN-2999, and JIS B0203.

BALL VALVES |

3-WAY VALVE

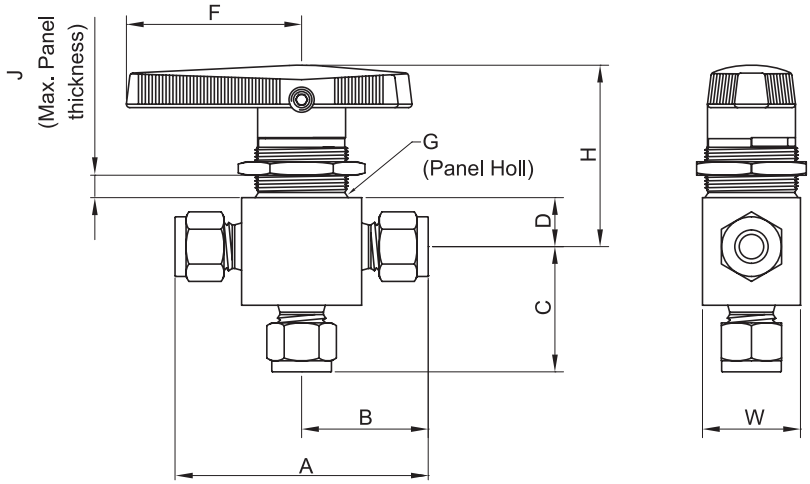

Order Number		Orifice in. (mm)	Cv	End Connections		Dimensions in. (mm)								
Series	Part No.			Inlet	Outlet	A	B	C	D	F	G	J	H	W
IBL1	1SW	0.051 (1.3)	0.08	1/16" T-LOK		1.68 (42.7)	0.84 (21.3)	0.81 (20.6)	0.34 (8.6)	1.12 (28.4)	0.59 (15.1)	0.25 (6.4)	1.37 (34.7)	0.58 (14.7)
	2SW	0.094 (2.4)	0.15	1/8" T-LOK		2.01 (51.1)	1.00 (25.5)	0.97 (24.6)						
	3M SW		0.15	3mm T-LOK										
	4SW	0.126 (3.2)	0.35	1/4" T-LOK		2.21 (56.1)	1.10 (27.9)	1.07 (27.2)						
	6M SW		0.35	6mm T-LOK										
	2NF		0.3	1/8" Female NPT		1.63 (41.4)	0.81 (20.7)	0.81 (20.6)						
IBL2	4SW	0.189 (4.80)	0.9	1/4" T-LOK		2.36 (59.9)	1.18 (30)	1.17 (29.7)	0.44 (11.2)	1.53 (38.9)	0.78 (19.8)	0.19 (4.8)	1.56 (39.6)	0.78 (19.8)
	6M SW		0.9	6mm T-LOK		0.39 (60.7)	1.20 (30.5)							
	8M SW		0.8	8mm T-LOK		2.46 (62.5)	1.23 (31.2)	1.20 (30.5)						
	4NF		0.75	1/4" Female NPT		2.06 (52.3)	1.03 (26.2)	1.03 (26.2)						
	4PTF		0.75	1/4" Female ISO[1]										
	4SW 4NM		0.8	1/4" Male NPT	1/4" T-LOK	2.2 (55.9)	1.17 (29.8)							
IBL3	6SW	0.280 (7.1)	2	3/8" T-LOK		2.89 (73.4)	1.43 (36.6)	1.43 (36.3)	0.56 (14.2)	2.00 (50.8)	1.13 (28.6)	0.37 (9.5)	2.07 (52.6)	1.12 (28.4)
	10M SW		2	10mm T-LOK		3.07 (78.0)	1.25 (31.8)							
	4NF		1.7	1/4" Female NPT		2.50 (63.5)	1.25 (31.8)	1.25 (31.8)						
	6NF		1.5	3/8" Female NPT										
	8PTF		1.5	3/8" Female ISO[1]										
IBL4	8SW	0.406 (10.3)	4.6	1/2" T-LOK		3.48 (88.4)	1.74 (44.2)	1.74 (44.2)	0.69 (17.5)	3.00 (76.2)	1.5 (38.1)		2.43 (61.7)	1.50 (38.1)
	12SW		3.8	3/4" T-LOK										
	12M SW		4.6	12mm T-LOK										
	8NF		3.5	1/2" Female NPT		3.12 (79.2)	1.56 (39.6)	1.56 (39.6)						

[1] Refer to specifications ISO 7/1, BS EN 10226-1, DIN-2999, and JIS B0203.

Three Pieces Ball Valves

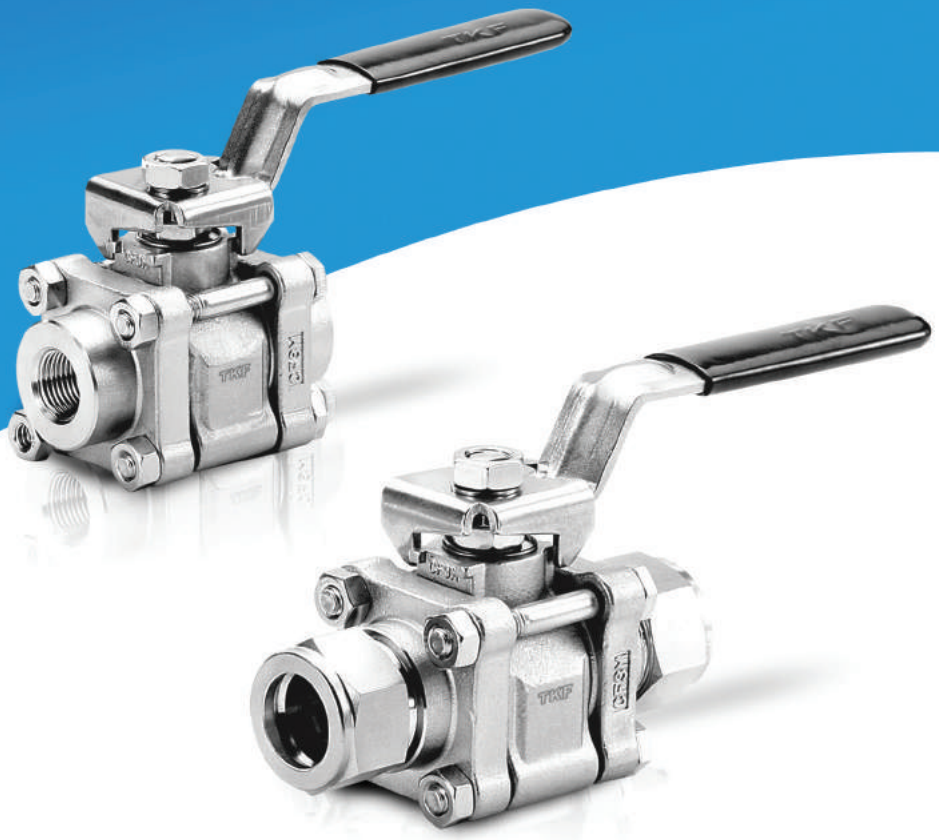

SBL SERIES

- Maximum Working Pressure : 2,200 psig (151 bar) @ 100˚F (37˚C)
- Working Temperature Range : -20˚F (-28˚C) to 302˚F (150˚C)

TK-FUJIKIN CORPORATION
Fujikin Carp Group

ORDERING INFORMATION

SS – SBL1 – 4SW

1 2 3

1. BODY MATERIAL

Material	Designator
316 SS	SS

2. VALVE SERIES

Orifice Size	Designator
4.8mm, 6.4mm, 7.1mm	SBL1
9.5mm, 10.3mm, 13.1mm	SBL2
22.2mm	SBL3

* The Orifice Size is determined using valves with TKF tube fitting end connections.
* For more details, See the Dimensions Table.

3. INLET / OUTLET CONNECTION SIZE & TYPE

Inlet / Outlet Connection Size	Designator	Inlet / Outlet Connection Type	Designator
1/4"	4	Lok	SW
3/8"	6	Female NPT	NF
1/2"	8	Female ISO① Tapered	PTF
3/4"	12		
1"	16		
6mm	6M		
8mm	8M		
10mm	10M		
12mm	12M		

① Refer to specifications ISO 7/1, BS EN 10226-1, DIN-2999, and JIS B0203.

FEATURES

1. Large flowate with 3 pieces body.
2. ON-OFF by operation of quarter turn.
3. End Connections : T-LOK Type, Rc, NPT Female

TECHNICAL DATA

TEMPERATURE AND PRESSURE RATING

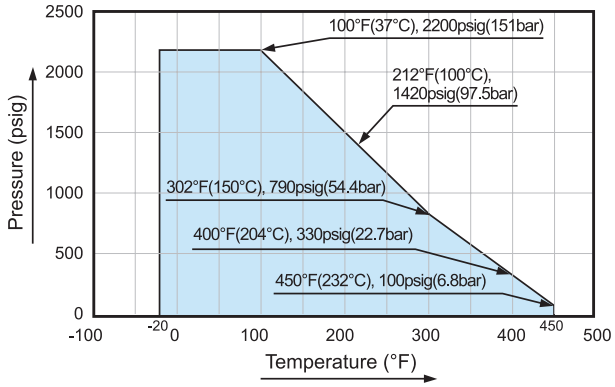

APPLICABLE FLUID

Air, Nitrogen gas, Inert gas like Helium, and non-corrosive gas and liquid.

MATERIALS OF CONSTRUCTION

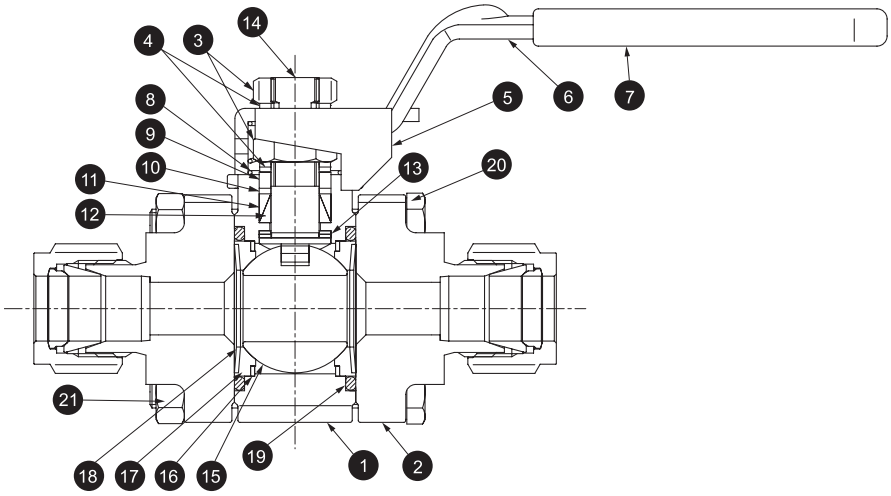

No.	Description		Materials	No.	Description		Materials
1	BODY	※	CF3M / A351	12	BOTTOM PACKING	※	C - PTFE
2	FLANGE	※	CF3M / A351	1 3	STEM BEARING	※	316 SS
3	STEM NUT		316 SS / A276	14	STEM	※	316 SS / A240
4	STEM SPRING		304 SS - CSP	15	BALL	※	316 SS / A240 OR CF8M / A351
5	STOP PLATE		304 SS / A240				
6	HANDLE		304 SS / A240	16	SUPPORT RING	※	316 SS / A240
7	HANDLE SLEEVE		VINYL	17	SEAT	※	C - PTFE
8	EARTH SPRING		302 SS / A313	18	SEAT SPRING	※	304 SS - CSP
9	GLAND		316 SS / B783	19	O-RING	※	FKM
10	PACKING SUPPORT		PEEK	20	BOLT		316 SS
11	TOP PACKING	※	C - PTFE	21	BOLT NUT		316 SS

※ : Wetted Parts

DIMENSIONS

END CONNECTION : RC TYPE (PT)

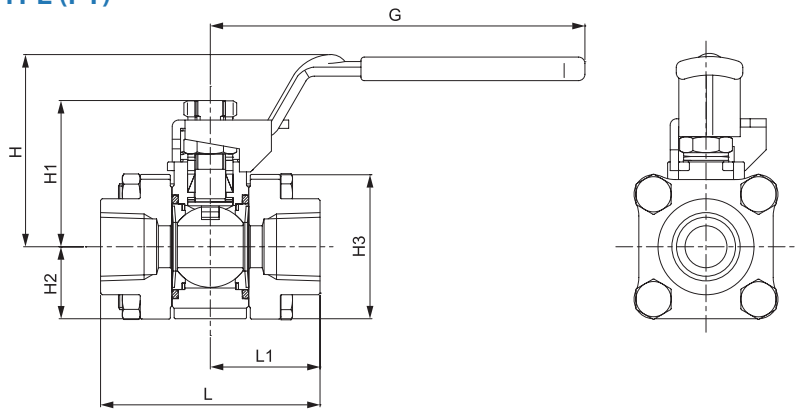

Ordering Number		Orifice in. (mm)	Cv	End Connections		Dimensions in. (mm)						
Series	Part No.			Inlet	Outlet	L	L1	H	H1	H2	H3	G
SBL1	4PTF	0.280 (7.1)	3.8	1/4" Female ISO① Tapered		2.16 (54.9)	1.08 (27.4)	1.66 (42.2)	1.26 (32.0)	0.68 (17.3)	1.35 (34.3)	2.37 (60.2)
SBL2	6PTF	0.516 (13.1)	12	3/8" Female ISO① Tapered		2.70 (68.6)	1.34 (34.3)	2.35 (59.7)	1.79 (45.5)	0.89 (22.6)	1.78 (45.2)	4.49 (114)
	8PTF	0.516 (13.1)	12	1/2" Female ISO① Tapered		2.70 (68.6)	1.34 (34.3)	2.35 (59.7)	1.79 (45.5)	0.89 (22.6)	1.78 (45.2)	4.49 (114)
SBL3	12PTF	0.874 (22.2)	31	3/4" Female ISO① Tapered		3.59 (91.2)	1.80 (45.7)	2.94 (74.7)	2.52 (64.0)	1.25 (31.8)	2.50 (63.5)	5.98 (152)
	16PTF	0.874 (22.2)	38	1" Female ISO① Tapered		4.45 (113.0)	2.23 (56.6)	2.94 (74.7)	2.52 (64.0)	1.25 (31.8)	2.50 (63.5)	5.98 (152)

DIMENSIONS

END CONNECTION : T-LOK TYPE

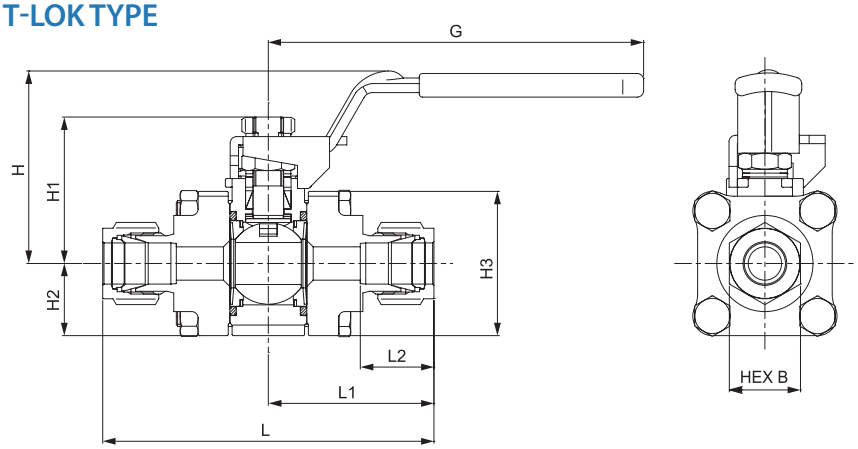

Ordering Number		Orifice in. (mm)	Cv	End Connections		Dimensions in. (mm)								
Series	Part No.			Inlet	Outlet	L	L1	L2	B	H	H1	H2	H3	G
SBL1	4SW	0.189 (4.8)	1.2	1/4" Lok		3.17 (80.5)	1.59 (40.4)	0.6 (15.2)	9/16 in.	1.66 (42.2)	1.26 (32.0)	0.68 (17.3)	1.35 (34.3)	2.37 (60.2)
	6SW	0.280 (7.1)	3.8	3/8" Lok		3.17 (80.5)	1.59 (40.4)	0.66 (16.8)	11/16 in.	1.66 (42.2)	1.26 (32.0)	0.68 (17.3)	1.35 (34.3)	2.37 (60.2)
SBL2	8SW	0.406 (10.3)	7.5	1/2" Lok		4.04 (103)	2.02 (51.3)	0.9 (22.9)	7/8 in.	2.35 (59.7)	1.79 (45.5)	0.89 (22.6)	1.78 (45.2)	4.50 (114)
	12SW	0.516 (13.1)	13.6	3/4" Lok		4.04 (103)	2.02 (51.3)	0.96 (24.4)	1-1/8 in.	2.35 (59.7)	1.79 (45.5)	0.89 (22.6)	1.78 (45.2)	4.50 (114)
SBL3	16SW	0.874 (22.2)	40	1" Lok		5.36 (136.0)	2.68 (68.1)	1.23 (31.2)	1-1/2 in.	2.94 (74.7)	2.52 (64.0)	1.25 (31.8)	2.50 (63.5)	6.0 (152)
SBL1	6M	0.189 (4.8)	1.2	6mm Lok		3.17 (80.5)	1.59 (40.4)	0.6 (15.3)	0.55 (14)	1.66 (42.2)	1.26 (32.0)	0.68 (17.3)	1.35 (34.3)	2.37 (60.2)
	8M	0.252 (6.4)	2.5	8mm Lok		3.17 (80.5)	1.59 (40.4)	0.64 (16.2)	0.63 (16)	1.66 (42.2)	1.26 (32.0)	0.68 (17.3)	1.35 (34.3)	2.37 (60.2)
	10M	0.280 (7.1)	3.8	10mm Lok		3.20 (81.3)	1.60 (40.6)	0.68 (17.2)	0.75 (19)	1.66 (42.2)	1.26 (32.0)	0.68 (17.3)	1.35 (34.3)	2.37 (60.2)
SBL2	12M	0.374 (9.5)	7.5	12mm Lok		4.04 (103)	2.02 (51.3)	0.9 (22.8)	0.87 (22)	2.35 (59.7)	1.79 (45.5)	0.89 (22.6)	1.78 (45.2)	4.50 (114)

END CONNECTION : NPT FEMALE TYPE

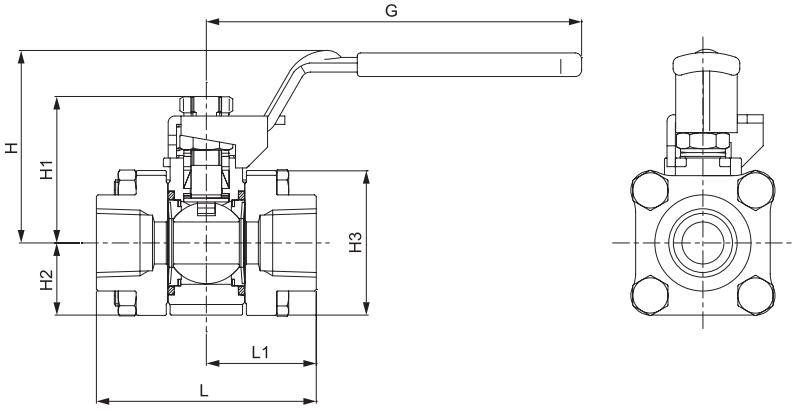

Ordering Number		Orifice in. (mm)	Cv	End Connections		Dimensions in. (mm)						
Series	Part No.			Inlet	Outlet	L	L1	H	H1	H2	H3	G
SBL1	4NF	0.280 (7.1)	3.8	1/4" Female NPT		2.16 (54.9)	1.08 (27.4)	1.66 (42.2)	1.26 (32.0)	0.68 (17.3)	1.35 (34.3)	2.37 (60.2)
SBL2	6NF	0.516 (13.1)	12	3/8" Female NPT		2.70 (68.6)	1.34 (34.3)	2.35 (59.7)	1.79 (45.5)	0.89 (22.6)	1.78 (45.2)	4.49 (114)
	8NF	0.516 (13.1)	12	1/2" Female NPT		2.70 (68.6)	1.34 (34.3)	2.35 (59.7)	1.79 (45.5)	0.89 (22.6)	1.78 (45.2)	4.49 (114)
SBL3	12NF	0.874 (22.2)	31	3/4" Female NPT		3.59 (91.2)	1.80 (45.7)	2.94 (74.7)	2.52 (64.0)	1.25 (31.8)	2.50 (63.5)	5.98 (152)
	16NF	0.874 (22.2)	38	1" Female NPT		3.59 (91.2)	1.80 (45.7)	2.94 (74.7)	2.52 (64.0)	1.25 (31.8)	2.50 (63.5)	5.98 (152)

Hex Ball Valves

HBL / HBLK SERIES

- Maximum Working Pressure : 1,000psig (69bar) @ 100˚F (38˚C)
- Working Temperature Range : 0˚F (-17˚C) to 302˚F (150˚C)

TK-FUJIKIN CORPORATION
Fujikin Carp Group

HBL SERIES ORDERING INFORMATION

SS	–	HBL	–	4SW	–	BH
1		2		3		4

1. BODY MATERIAL

Material	Designator
316 SS	SS

2. VALVE SERIES

* Orifice Size	Designator
5.0mm	HBL
7.5mm	
9.0mm	
12.5mm	
16.0mm	

* The Orifice Size is defermined using valves with TKF tube fitting end connections.
* For more details, See the Dimensions Table.

3. INLET / OUTLET CONNECTION SIZE & TYPE

Inlet / Outlet Connection Size	Designator
1/4"	4
3/8"	6
1/2"	8
3/4"	12
1"	16
6mm	6M
8mm	8M
10mm	10M
12mm	12M

Inlet / Outlet Connection Type	Designator
Lok	SW
Female NPT	NF
Female ISO① Tapered	PTF

① Refer to specifications ISO 7/1, BS EN 10226-1, DIN-2999, and JIS B0203.

4. HANDLE TYPE

Handle Type	Designator
ZINC BUTTERFLY HANDLE with CHROME plated	Blank
316 SS LEVER HANDLE with PE color coated	BH
STICK HANDLE	SH

HBLK SERIES ORDERING INFORMATION

SS	—	HBLKN	—	4SW	—	BL
1		2		3		4

1. BODY MATERIAL

Material	Designator
316 SS	SS

2. VALVE SERIES

Orifice Size	Designator
5.0mm	HBLKN
7.5mm	
9.0mm	
12.5mm	
16.0mm	

* The Orifice Size is defermined using valves with TKF tube fitting end connections.
* For more details, See the Dimensions Table.

3. INLET / OUTLET CONNECTION SIZE & TYPE

Inlet / Outlet Connection Size	Designator
1/4"	4
3/8"	6
1/2"	8
3/4"	12
1"	16
6mm	6M
8mm	8M
10mm	10M
12mm	12M

Inlet / Outlet Connection Type	Designator
Lok	SW
Female NPT	NF
Female ISO① Tapered	PTF

① Refer to specifications ISO 7/1, BS EN 10226-1, DIN-2999, and JIS B0203.

4. HANDLE COLOR

Color	Designator
Blue	BL
Red	RD

FEATURES

- Compact Design
- Low Torque and easy operation
- Butterfly, lever and key operation type handle available

TECHNICAL DATA

SPECIFICATIONS

Maximum Working Pressure	1,000 psig (69 bar) @ 100˚F (38˚C)
Working Temperature Range	0˚F to 302˚F (-17˚C to 150˚C)
Body Material	316 SS / A479
Port Connections	1/4" to 1" and 6mm to 16mm
Orifice	5mm to 16.0mm

TEMPERATURE - WORKING PRESSURE RATING

Series	HBL / HBLK
Material	316 SS / A479
Temperature, °F (°C)	Working Pressure, psig (bar)
0 (-17) to 100 (37)	1000 (69)
150 (65)	900 (62)

MATERIALS OF CONSTRUCTION

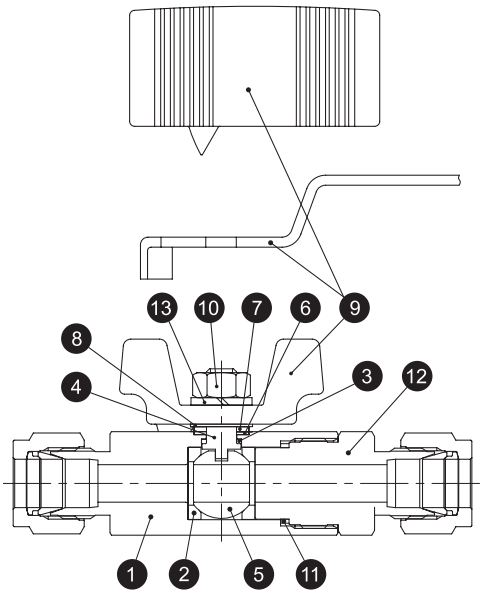

No.	Description	Material Material Grade/ASTM Specification
1	BODY	316 SS / A479
2	SEAT	PTFE
3	LOWER STEM SEAL	PTFE
4	STEM	316 SS / A479
5	BALL	316 SS / A479
6	UPPER STEM SEAL	PTFE
7	LOWER STEM SEAL	316 SS
8	UPPER STEM WASHER	316 SS
9	HANDLE	ZINC BUTTERFLY HANDLE with CHROME plated
		316 SS LEVER HANDLE with PE color coated
		ADC12 KEY OPERATION TYPE HANDLE
	STICK HANDLE	SH
10	NUT	316 SS
11	PACKING	PTFE
12	ADAPTER	316 SS / A479
	INSERT	
13	SPRING WASHER	316 SS

DIMENSIONS

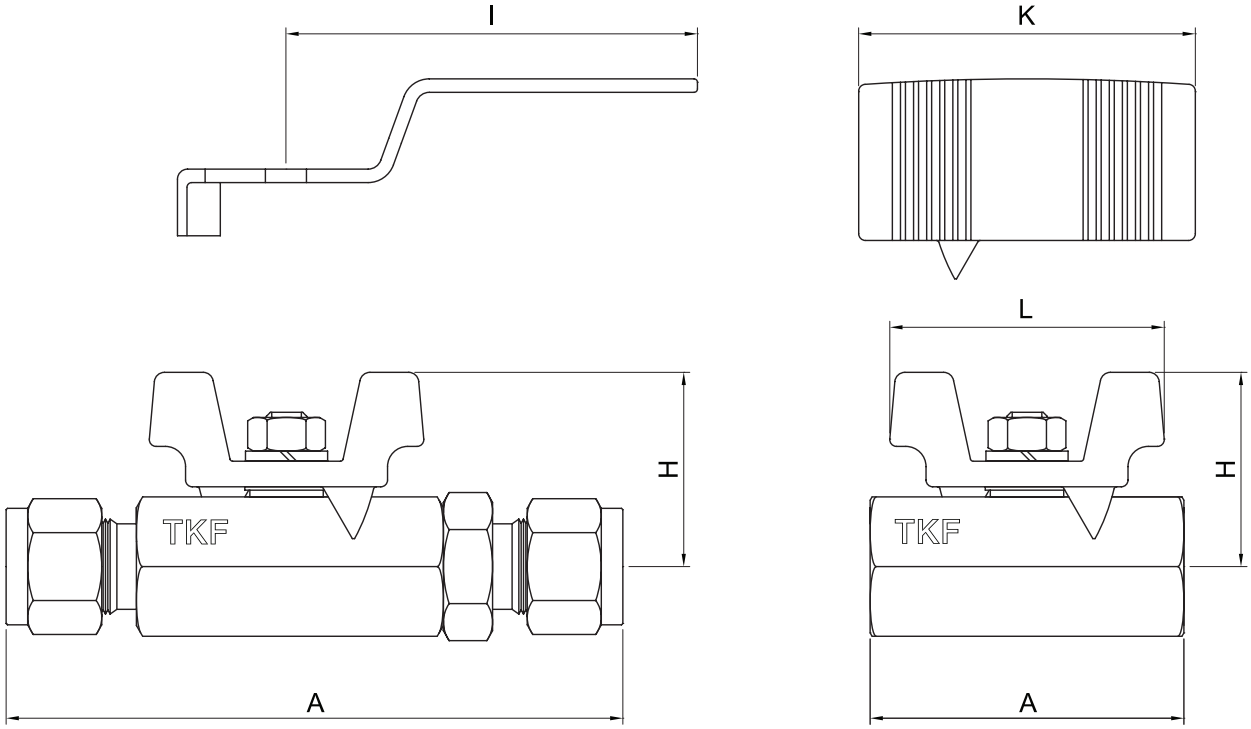

Ordering Number		Orifice	Cv	End Connections		Dimensions in. (mm)				
Series	Part NO.			Inlet	Outlet	A	H	I	L	K
HBL / HBLKN	6MSW	5	1.25	6mm T-LOK		3.15 (80.0)	0.91 (23.0)	2.34 (59.5)	1.18 (30.0)	-
	4SW		1.25	1/4" T-LOK						
	4NF		1.4	1/4" Female NPT		1.69 (42.8)				
	4PTF		1.4	1/4" Female PT						
	10MSW	7.5	2.6	10mm T-LOK		3.59 (91.2)	1.14 (28.9)	3.19 (81.0)	1.61 (41.0)	-
	6SW		2.5	3/8" T-LOK						
	6NF		2.6	3/8" Female NPT		1.83 (46.6)				
	6PTF		2.6	3/8" Female PT						
	12MSW	9	9.5	12mm T-LOK		3.99 (101.4)	1.38 (35.0)		1.97 (50.0)	1.97 (50.0)
	8SW		9.5	1/2" T-LOK						
	8NF		9.5	1/2" Female NPT		2.17 (55.0)				
	8PTF		9.5	1/2" Female PT						
	12SW	12.5	12.7	3/4" T-LOK		4.19 (106.3)	1.48 (37.5)	4.04 (102.5)	2.05 (52.0)	2.52 (64.0)
	12NF		12.7	3/4" Female NPT		2.41 (61.3)				
	12PTF		12.7	3/4" Female PT						
	16SW	16	17.5	1" T-LOK		5.16 (131.0)	1.77 (45.0)		2.56 (65.0)	2.52 (64.0)
	16NF		17.5	1" Female NPT		2.99 (76.0)				
	16PTF		17.5	1" Female PT						

Trunnion Ball Valves

TBL/HTBL SERIES

- Maximum Working Pressure
  TBL SERIES : 6,000 psig (413 bar) @ 100˚F (37˚C)
  HTBL SERIES : 1,0000psig (689bar) @ 100˚F (37˚C)
- Working Temperature Range : 0˚F(-17˚C) to 450˚F(232˚C)

TK-FUJIKIN CORPORATION
Fujikin Carp Group

ORDERING INFORMATION

SS	—	TBL	3	D	—	4SW	—	BL	—	PT
1		2	3	4		5		6		7

1. BODY MATERIAL

Material	Designator
316 SS	SS

2. VALVE SERIES

Orifice Size	Designator
4.8mm	TBL
	HTBL

* The Orifice Size is determined using valves with TKF tube fitting end connections.
* For more details, See the Dimensions Table

3. BODY PATTERN

Body Pattern	Designator
2-Way Straight (Standard)	Blank
3-Way	3

4. VENT PORT OPTION

Vent Port Option	Designator
Without	Blank
Downstream Vent	D
Upstream Vent	U

5. INLET/OUTLET CONNECTION SIZE & TYPE

Inlet/Outlet Connection Size	Designator
1/8″	2
1/4″	4
3/8″	6
1/2″	8
6mm	6M
8mm	8M
10mm	10M
12mm	12M

Inlet/Outlet Connection Type	Designator
Lok	SW
Male NPT	NM
Female NPT	NF
Male ISO① Tapered	PTM
Female ISO① Tapered	PTF

① Refer to specifications ISO 7/1, BS EN 10226-1, DIN-2999, and JIS B0203.

6. HANDLE TYPE

Handle Type	Designator
Black Phenolic Handle (Standard)	Blank
Blue Phenolic Handle	BL
Green Phenolic Handle	GR
Orange Phenolic Handle	OG
Red Phenolic Handle	RD
Yellow Phenolic Handle	YW
Oval Handle	O
Stainless Steel Bar Handle	S

7. SEAT MATERIAL

Seat Material	Designator
PEEK	Blank
Reinforced Nylon	RN
PCTFE	PC
PTFE	PT

FEATURES

- Compact, maximum-flow design
- Low operating torque
- 2-Way or 3-way flow patterns

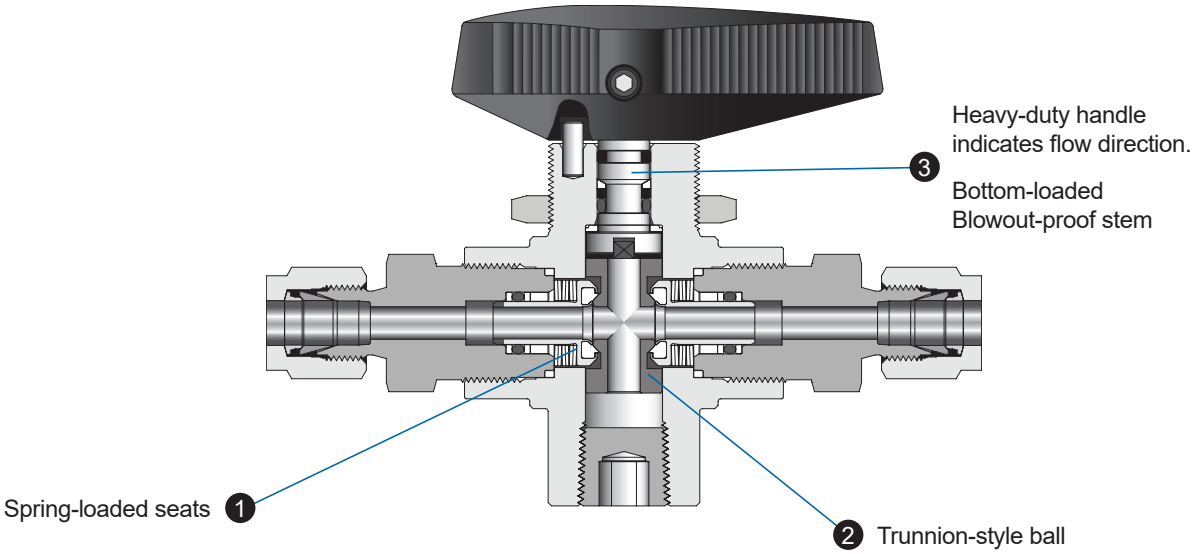

♦ TKF ball valves are designed to be used in a fully open or fully closed position.

♦ Valves that have not been cycled for a period of time may have a higher initial actuation torque.

TECHNICAL DATA

TEMPERATURE - WORKING PRESSURE RATING

Seat Material	Temperature Rating °F (°C)	Pressure Rating at 100°F (37°C) psig (bar)	Flow Coefficient (Cv)
		Stainless Steel	
TBL Series			
PCTFE, reinforced nylon	0 to 250 (–17 to 121)	6,000 (413)	2-way valves- 1.0 to 1.6 depending on end connection; 3-way valves- 0.75
PEEK	0 to 450 (–17 to 232)	6,000 (413)	
PTFE		1,500 (103)	
HTBL Series			
PEEK	0 to 450 (–17 to 232)	6,000 to 10,000 (413 to 689) depending on end connection	2-way valves- 1.0 to 1.6 depending on end connection; 3-way valves- 0.75

TEMPERATURE - PRESSURE RATING ACCORDING TO PACKING MATERIALS

TBL SERIES

■ Pressure-temperature ratings for TBL series valves are based on listed seat materials, fluorocarbon FKM O-rings, and reinforced PTFE backup rings.

Material	316 SS		
Seat Material	PCTFE, Nylon	PTFE	PEEK
Temperature, °F (°C)	Working Pressure, psig (bar)		
0 (–17) to 100 (37)	6,000 (413)	1,500 (103)	6,000 (413)
150 (65)	3,000 (206)	1,125 (77.5)	5,800 (399)
200 (93)	2,000 (137)	750 (51.6)	5,000 (344)
250 (121)	1,000 (68.9)	625 (43.0)	4,100 (282)
300 (148)	-	500 (34.4)	3,200 (220)
350 (176)	-	375 (25.8)	2,300 (158)
400 (204)	-	250 (17.2)	1,400 (96.4)
450 (232)	-	125 (8.6)	500 (34.4)

HTBL SERIES

■ Pressure-temperature ratings for TBL series valves are based on PEEK seats, fluorocarbon FKM O-rings, and reinforced PTFE backup rings.

Material	316 SS				
End Connections	2NF, 4NF 4SW, 6MSW	10MSW	6SW, 8MSW	8SW	12MSW
Temperature, °F (°C)	Working Pressure, psig (bar)				
0 (–17) to 100 (37)	10,000 (689)	8,400 (578)	7,500 (516)	6,700 (461)	6,600 (454)
150 (65)	7,500 (516)	7,500 (516)	7,500 (516)	6,700 (461)	6,600 (454)
200 (93)	5,000 (344)	5,000 (344)	5,000 (344)	5,000 (344)	5,000 (344)
250 (121)	4,100 (282)	4,100 (282)	4,100 (282)	4,100 (282)	4,100 (282)
300 (148)	3,200 (220)	3,200 (220)	3,200 (220)	3,200 (220)	3,200 (220)
350 (176)	2,300 (158)	2,300 (158)	2,300 (158)	2,300 (158)	2,300 (158)
400 (204)	1,400 (96.4)	1,400 (96.4)	1,400 (96.4)	1,400 (96.4)	1,400 (96.4)
450 (232)	500 (34.4)	500 (34.4)	500 (34.4)	500 (34.4)	500 (34.4)

FLOW DATA AT 70°F (20°C)

TBL SERIES 2-WAY

0.189 in. (4.80 mm) orifice, 1.2 Cv

Pressure Drop to Atmosphere (Δp) psi (bar)	Air Flow std ft3/min (std L/min)	Water Flow U.S. gal/min (L/min)
10 (0.68)	14 (390)	3.8 (14)
50 (3.4)	36 (1000)	8.5 (32)
100 (6.8)	64 (1800)	12 (45)

HTBL SERIES 2-WAY

0.189 in. (4.80 mm) orifice, 1.2 Cv

Pressure Drop to Atmosphere (Δp) psi (bar)	Air Flow std ft3/min (std L/min)	Water Flow U.S. gal/min (L/min)
150 (10.3)	92 (2600)	15 (56)
600 (41.3)	340 (9600)	29 (100)
1,000 (68.9)	570 (16100)	38 (140)

TBL SERIES 3-WAY

0.189 in. (4.80 mm) orifice, 0.75 Cv

Pressure Drop to Atmosphere (Δp) psi (bar)	Air Flow std ft3/min (std L/min)	Water Flow U.S. gal/min (L/min)
10 (0.68)	8.0 (220)	2.4 (9.0)
50 (3.4)	23 (650)	5.3 (20)
100 (6.8)	40 (1100)	7.5 (28)

HTBL SERIES 3-WAY

0.189 in. (4.80 mm) orifice, 0.75 Cv

Pressure Drop to Atmosphere (Δp) psi (bar)	Air Flow std ft3/min (std L/min)	Water Flow U.S. gal/min (L/min)
150 (10.3)	57 (1,600)	9.2 (34)
600 (41.3)	210 (5,900)	18 (68)
1,000 (68.9)	350 (9,900)	24 (90)

TESTING

■ For leakage, Each valve is tested with nitrogen at 1,000psig (69bar). The leakage shall not exceed 0.1 std cc/min (Max. 0.1 std cc/min)

CLEANING AND PACKAGING

■ Every valve is cleaned and packaged in accordance with the standard specification of cleaning and packaging.

MATERIALS OF CONSTRUCTION

TBL SERIES

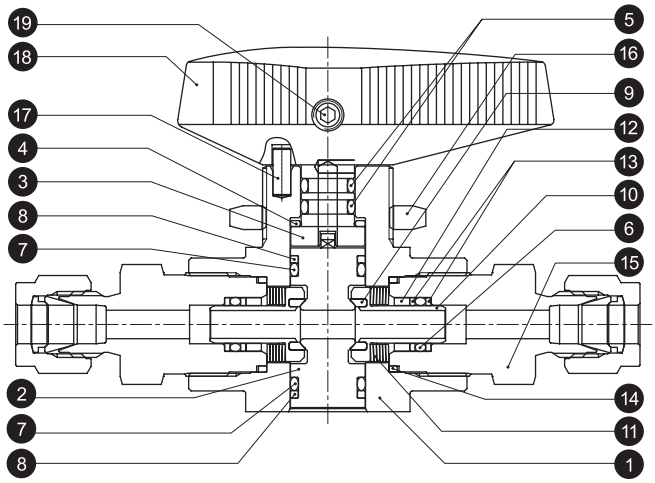

No.	Description	Material Material Grade/ASTM Specification 2-Way	3-Way
1	Body	316 SS / A479	
2	Ball	316 SS / A276	
3	Stem	316 SS / A276	
4	Stem BEARING	PTFE (C:15%)	PEEK
5	Stem O-Ring	Fluorocarbon FKM	
6	Seat Carrier O-Ring	Fluorocarbon FKM	
7	Trunnion O-Ring	Fluorocarbon FKM	
8	Trunnion Backup Ring (2-Way)	PTFE (C:15%)	-
9	Seat	PEEK	
10	Seat Carrier	316 SS / A276	
11	Seat Spring	Alloy X-750	
12	Seat Carrier Guide	316 SS / A276	
13	Seat Carrier Backup Ring	PTFE (C:15%)	
14	End Screw Seal	PTFE	
15	End Screw	316 SS / A479	
16	Panel Nut	304 SS / A276	
17	Stop Pin	304 SS	
18	Handle	PHENOL + C3604B	
19	Set Screw	S17400 SS	
20	Primary Stem Backup Ring(3-Way)	-	PEEK
21	Secondary Stem Backup Ring (3-Way)	-	PTFE
22	Trunnion Bearing (3-Way)	-	PEEK

HTBL SERIES

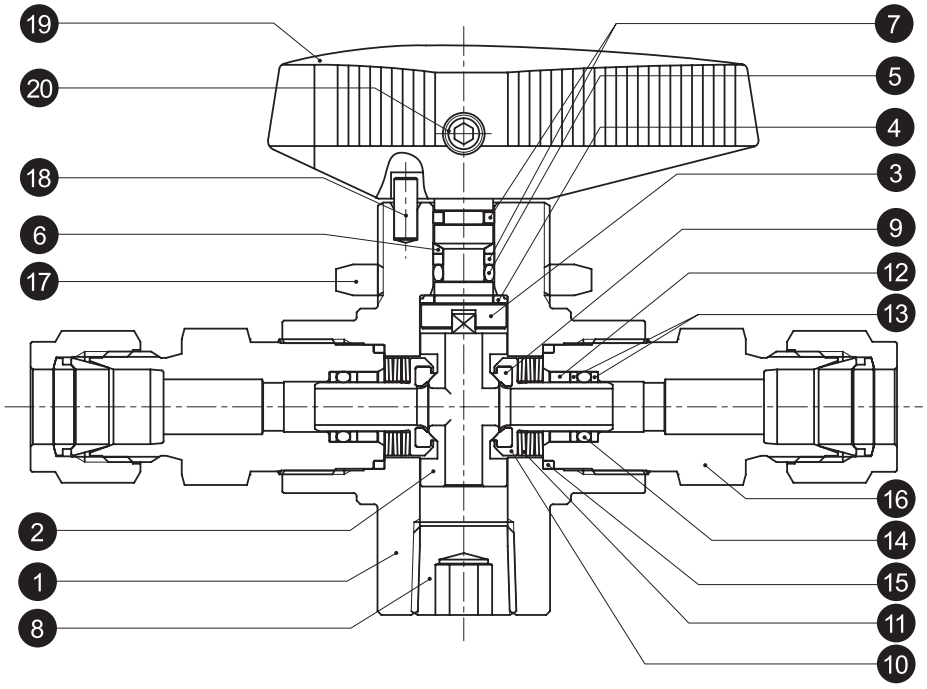

No.	Description	Material	
		Material Grade/ASTM Specification	
		2-Way	3-Way
1	Body	316 SS / A479	
2	Ball	316 SS / A276	
3	Stem	316 SS / A276	
4	Stem Bearing	PEEK	
5	Stem O-Ring	Fluorocarbon FKM	
6	Primary Stem Backup Ring	PEEK	
7	Secondary Stem Backup Ring	PTFE	
8	Plug (2-WAY)	316 SS / A479	-
9	Seat	PEEK	
10	Seat Carrier	316 SS / A276	
11	Seat Spring	Alloy X-750	
12	Seat Carrier Guide	316 SS / A276	
13	Seat Carrier Backup Ring	PTFE (C:15%)	
14	Seat Carrier O-Ring	Fluorocarbon FKM	
15	End Screw Seal	PTFE	
16	End Screw	316 SS / A479	
17	Panel Nut	304 SS / A276	
18	Stop Pin	304 SS	
19	Handle	PHENOL + C3604B	
20	Set Screw	S17400 SS	

DIMENSIONS

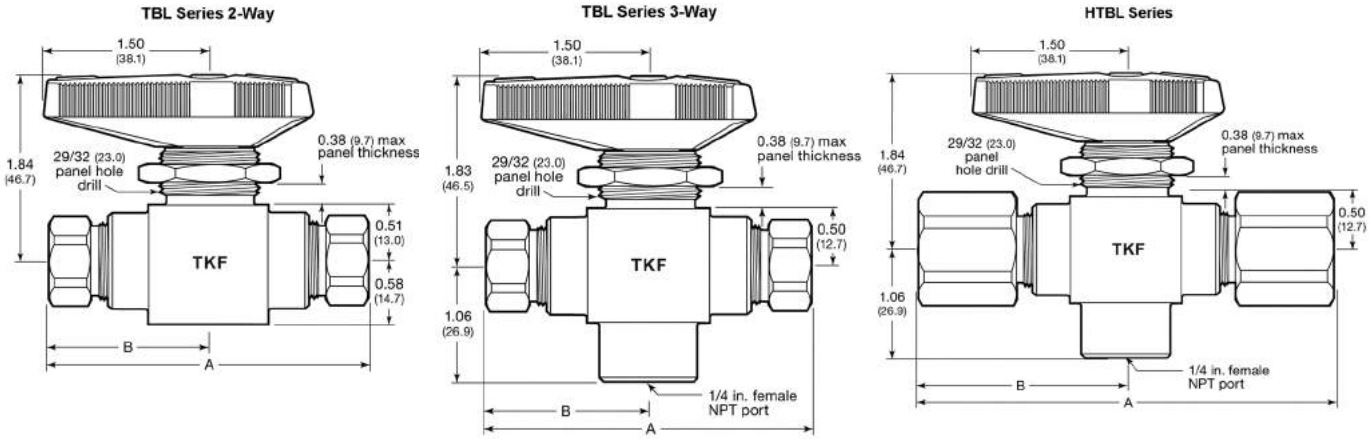

TBL & HTBL SERIES 2-WAY

Ordering Number		Orifice in. (mm)	Cv	End Connections		Dimensions in. (mm)	
Series	Part No.			Inlet	Outlet	A	B
TBL	2NF	0.189 (4.80)	1.2	1/8" Female NPT		2.94 (74.7)	1.47 (37.3)
	4NF		1.0	1/4" Female NPT		2.94 (74.7)	1.47 (37.3)
	8NF		1.2	1/2" Female NPT		4.25 (108)	2.13 (54.0)
	4SW		1.6	1/4" Lok		4.14 (105.2)	2.07 (52.6)
	6SW		1.4	3/8" Lok		4.38 (111.2)	2.19 (55.6)
	8SW		1.0	1/2" Lok		4.60 (116.8)	2.30 (58.4)
	6MSW		1.6	6mm Lok		4.14 (105)	2.07 (52.5)
	8MSW		1.5	8mm Lok		4.15 (105)	2.07 (52.5)
	10MSW		1.3	10mm Lok		4.41 (112)	2.20 (56.0)
	12MSW		1.0	12mm Lok		4.60 (117)	2.30 (58.5)
HTBL	2NF		1.2	1/8" Female NPT		2.94 (74.7)	1.47 (37.3)
	4NF		1.0	1/4" Female NPT		3.93 (99.8)	1.97 (50.0)
	4SW		1.6	1/4" Lok		4.14 (105)	2.07 (52.6)
	6SW		1.4	3/8" Lok		4.39 (112)	2.19 (55.6)
	8SW		1.0	1/2" Lok		4.60 (117)	2.30 (58.4)
	6MSW		1.6	6mm Lok		4.14 (105)	2.07 (52.6)
	8MSW		1.5	8mm Lok		4.15 (105)	2.07 (52.6)
	10MSW		1.3	10mm Lok		4.41 (112)	2.20 (55.9)
	12MSW		1.0	12mm Lok		4.60 (117)	2.30 (58.4)

TBL & HTBL SERIES 3-WAY

Ordering Number		Orifice in. (mm)	Cv	End Connections		Dimensions in. (mm)	
Series	Part No.			Inlet	Outlet	A	B
TBL	2NF	0.189 (4.80)	0.75	1/8" Female NPT		2.94 (74.7)	1.47 (37.3)
	4NF			1/4" Female NPT		2.94 (74.7)	1.47 (37.3)
	4SW			1/4" Lok		4.14 (105)	2.07 (52.6)
	6SW			3/8" Lok		4.39 (112)	2.19 (55.6)
	8SW			1/2" Lok		4.60 (117)	2.30 (58.4)
	6MSW			6mm Lok		4.14 (105)	2.07 (52.6)
	8MSW			8mm Lok		4.15 (105)	2.07 (52.6)
	10MSW			10mm Lok		4.41 (112)	2.20 (55.6)
	12MSW			12mm Lok		4.60 (117)	2.30 (58.4)
HTBL	2NF			1/8" Female NPT		2.94 (74.7)	1.47 (37.3)
	4NF			1/4" Female NPT		3.93 (99.8)	1.97 (50.0)
	4SW			1/4" Lok		4.14 (105)	2.07 (52.6)
	6SW			3/8" Lok		4.39 (112)	2.19 (55.6)
	8SW			1/2" Lok		4.60 (117)	2.30 (58.4)
	6MSW			6mm Lok		4.14 (105)	2.07 (52.6)
	8MSW			8mm Lok		4.15 (105)	2.07 (52.6)
	10MSW			10mm Lok		4.41 (112)	2.20 (55.9)
	12MSW			12mm Lok		4.60 (117)	2.30 (58.4)

Forged High Pressure Ball Valve

FHBL SERIES

- Maximum Working Pressure :
  up to 6,000 psig (413bar) @ 70°F (21°C) with standard PCTFE seat
- Working Temperature Range :
  -63°F(-53°C) to 351°F (177°C) With standard PCTFE seat

TK-FUJIKIN CORPORATION
Fujikin Carp Group

FEATURES

- Compact Design
- Low Operating Torques
- Panel Mountable
- Floating Ball Design

TECHNICAL DATA

SPECIFICATIONS

Body Material	316 SS/ A182
Port Connections	1/4" to 1/2"
Orifice	4.2mm to 10.3mm

SEAT MATERIAL VS TEMPERATURE AND PRESSURE RATING

Seat Material	TEMPERATURE RATING @ 100°F(38°C)	PRESSURE RATING @ 100°F(38°C)
PCTFE	-65 to 300°F (-54°C to 148°C)	6000psig(413bar)
PEEK	-65 to 450°F (-54°C to 232°C)	6000psig(413bar)
PTFE	-65 to 300°F (-54°C to 148°C)	1500psig(103bar)

TESTING

For leakage, Each valve is tested with nitrogen at 1,000psig (69bar)

The leakage shall not exceed 0.1 std cc/min (Max. 0.1 std cc/min)

MATERIALS OF CONSTRUCTION

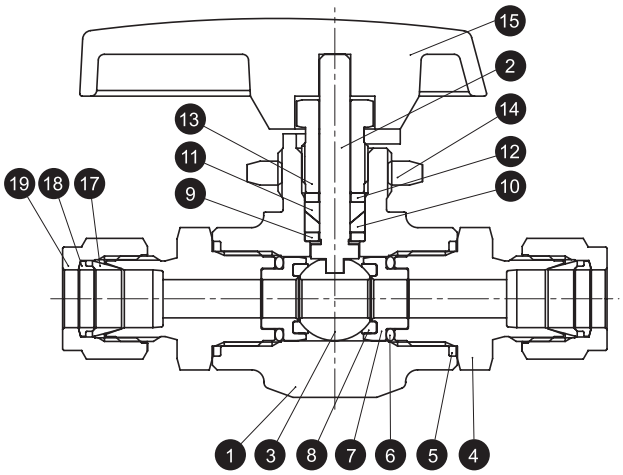

No.	Description	Material Material Grade/ASTM Specification
1	Body	316 SS/A182
2	Stem	316 SS/A479
3	Ball	316 SS/A276
4	End Connection	316 SS/A479
5	End Connection Packing	PTFE
6	O-Ring	FKM
7	Seal Retainer	316 SS/A479
8	Ball Seat	Standard PCTFE(PEEK)
9	Lower Gland	PEEK
10	Lower Packing	PTFE
11	Upper Packing	PTFE
12	Upper Gland	316 SS/A276
13	Packing Bolt	316 SS/A479
14	Panel Nut	316 SS/A276
15	Handle	ADC12
16	Set Screw	304SS
17	Front Ferrule	316 SS/A276
18	Back Ferrule	316 SS/A276
19	Female Nut	316 SS/A276

DIMENSIONS

2-WAY VALVE

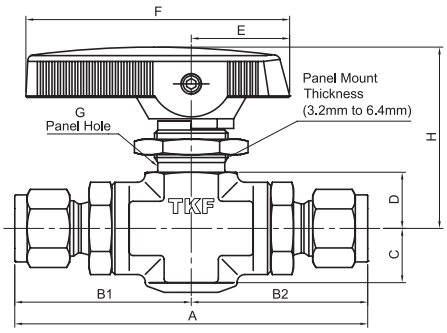

Ordering Number		Orifice in. (mm)	Cv	End Connections		Dimensions in. (mm)								
Series	Part No.			Inlet	Outlet	A	B1	B2	C	D	E	F	G	H
FHBL1	2SW	0.093(2.4)	0.21	1/8" Lok		2.94(74.7)	1.47(37.35)	1.47(37.35)	0.39 (10.0)	0.41 (10.5)	0.72 (18.3)	1.87 (47.5)	0.64 (16.3)	1.33 (33.8)
	4SW	0.165(4.2)	0.93	1/4" Lok		2.96(75.2)	1.48(37.6)	1.48(37.6)						
	3MSW	0.086(2.2)	0.21	3mm Lok		2.74(69.6)	1.37(34.8)	1.37(34.8)						
	2NM	0.165(4.2)	0.93	1/8" Male NPT		2.34(59.8)	1.17(29.9)	1.17(29.9)						
	4NM			1/4" Male NPT		2.7(68.6)	1.35(34.3)	1.35(34.3)						
	2NF			1/8" Female NPT		2.14(54.4)	1.07(27.2)	1.07(27.2)						
FHBL2	4SW	0.189(4.8)	1.04	1/4" Lok		3.48(88.4))	1.74(44.2)	1.74(44.2)	0.55 (14.0)	0.57 (14.5)	1 (25.4)	2.67 (68.0)	0.77 (19.6)	1.84 (46.8)
	6SW	0.250(6.4)	2.34	3/8" Lok		3.60(91.6)	1.80(45.8)	1.80(45.8)						
	6MSW	0.189(4.8)	1.04	6mm Lok		3.50(89.0)	1.75(44.5)	1.75(44.5)						
	8MSW	0.250(6.4)	2.34	8mm Lok		3.56(90.4)	1.78(45.2)	1.78(45.2)						
	10MSW			10mm Lok		3.62(92.0)	1.81(46.0)	1.81(46.0)						
	4NM			1/4" Male NPT		3.23(82.2)	1.62(41.1)	1.62(41.1)						
	6NM			3/8" Male NPT		3.23(82.2)	1.62(41.1)	1.62(41.1)						
	4NF			1/4" Female NPT		3.02(76.8)	1.51(38.4)	1.51(38.4)						
FHBL3	8SW	0.406(10.3)	6.42	1/2" Lok		4.67(118.8)	2.34(59.4)	2.34(59.4)	0.71 (18)	0.76 (19.3)	1.11 (28.2)	2.94 (74.7)	0.90 (22.9)	2.38 (60.5)
	12SW			3/4" Lok		4.66(118.4)	2.33(59.2)	2.33(59.2)						
	12MSW	0.375(9.5)	5.57	12mm Lok		4.66(118.4)	2.33(59.2)	2.33(59.2)						
	16MSW	0.406(10.3)	6.42	16mm Lok		4.66(118.4)	2.33(59.2)	2.33(59.2)						
	8NM			1/2" Male NPT		4.44(112.8)	2.22(56.4)	2.22(56.4)						
	6NF			3/8" Female NPT		3.89(99.0)	1.95(49.5)	1.95(49.5)						
	8NF			1/2" Female NPT		4.30(109.2)	2.15(54.6)	2.15(54.6)						

3-WAY VALVE

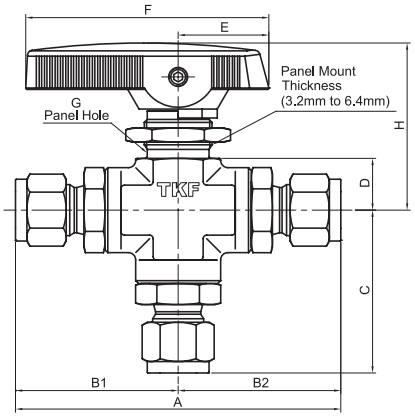

Ordering Number		Orifice in. (mm)	Cv	End Connections		Dimensions in. (mm)								
Series	Part No.			Inlet	Outlet	A	B1	B2	C	D	E	F	G	H
FHBL13	2SW	0.093(2.4)	0.21	1/8" Lok		2.94(74.7)	1.47(37.35)	1.47(37.35)	1.44(36.5)	0.41 (10.5)	0.72 (18.3)	1.87 (47.5)	0.64 (16.3)	1.33 (33.8)
	4SW	0.165(4.2)	0.93	1/4" Lok		2.96(75.2)	1.48(37.6)	1.48(37.6)	1.55(39.6)					
	3MSW	0.086(2.2)	0.21	3mm Lok		2.74(69.6)	1.37(34.8)	1.37(34.8)	1.45(36.8)					
	2NM	0.165(4.2)	0.93	1/8" Male NPT		2.34(59.8)	1.17(29.9)	1.17(29.9)	1.26(31.9)					
	4NM			1/4" Male NPT		2.7(68.6)	1.35(34.3)	1.35(34.3)	1.43(36.3)					
	2NF			1/8" Female NPT		2.14(54.4)	1.07(27.2)	1.07(27.2)	1.15(29.2)					
FHBL23	4SW	0.189(4.8)	1.04	1/4" Lok		3.48(88.4))	1.74(44.2)	1.74(44.2)	1.88(47.7)	0.57 (14.5)	1 (25.4)	2.67 (68.0)	0.77 (19.6)	1.84 (46.8)
	6SW	0.250(6.4)	2.34	3/8" Lok		3.60(91.6)	1.80(45.8)	1.80(45.8)	1.94(49.3)					
	6MSW	0.189(4.8)	1.04	6mm Lok		3.50(89.0)	1.75(44.5)	1.75(44.5)	1.89(48.0)					
	8MSW	0.250(6.4)	2.34	8mm Lok		3.56(90.4)	1.78(45.2)	1.78(45.2)	1.91(48.7)					
	10MSW			10mm Lok		3.62(92.0)	1.81(46.0)	1.81(46.0)	1.95(49.5)					
	4NM			1/4" Male NPT		3.23(82.2)	1.62(41.1)	1.62(41.1)	1.76(44.6)					
	6NM			3/8" Male NPT		3.23(82.2)	1.62(41.1)	1.62(41.1)	1.76(44.6)					
	8NF			1/2" Female NPT		3.02(76.8)	1.51(38.4)	1.51(38.4)	1.65(41.9)					
FHBL33	8SW	0.406(10.3)	6.42	1/2" Lok		4.67(118.8)	2.34(59.4)	2.34(59.4)	2.68(68.1)	0.76 (19.3)	1.11 (28.2)	2.94 (74.7)	0.90 (22.9)	2.38 (60.5)
	12SW			3/4" Lok		4.66(118.4)	2.33(59.2)	2.33(59.2)	2.67(67.9)					
	12MSW	0.375(9.5)	5.57	12mm Lok		4.66(118.4)	2.33(59.2)	2.33(59.2)	2.67(67.9)					
	16MSW	0.406(10.3)	6.42	16mm Lok		4.66(118.4)	2.33(59.2)	2.33(59.2)	2.67(67.9)					
	8NM			1/2" Male NPT		4.44(112.8)	2.22(56.4)	2.22(56.4)	2.56(65.1)					
	6NF			3/8" Female NPT		3.89(99.0)	1.95(49.5)	1.95(49.5)	2.29(58.2)					
	8NF			1/2" Female NPT		4.30(109.2)	2.15(54.6)	2.15(54.6)	2.49(63.3)					

ORDERING INFORMATION

SS	–	FHBL1	3	–	4SW	–	PE
1		2	3		4		5

1. BODY MATERIAL

Material	Designator
316 SS	SS

2. VALVE SERIES

Orifice Size	Designator
4.2mm	FHBL1
6.4mm	FHBL2
10.3mm	FHBL3

3. BODY PATTERN

Body Pattern	Designator
2-Way Straight (Standard)	Blank
3-Way	3

4. INLET/OUTLET CONNECTION SIZE & TYPE

Inlet/Outlet Connection Size	Designator
1/4"	4
3/8"	6
1/2"	8

Inlet/Outlet Connection Type	Designator
Lok	SW
Male NPT	NM
Female NPT	NF
Male ISO① Tapered	PTM
Female ISO① Tapered	PTF

① Refer to specifications ISO 7/1, BS EN 10226-1, DIN-2999, and JIS B0203.

5 . SEAT MATERIAL

Seat Material	Designator
PCTFE	Blank
PEEK	PE
PTFE	PT

Plug Valves

PV SERIES

- Maximum Working Pressure : 3,000 psig (206bar) @ 100˚F (37˚C)
- Working Temperature Range : -10˚F (-23˚C) to 400˚F (204˚C)

TK-FUJIKIN CORPORATION
Fujikin Carp. Group

ORDERING INFORMATION

SS	—	PV1	D	—	4SW	—	BK	—	KZ
1		2	3		4		5		6

1. BODY MATERIAL

Material	Designator
316 SS	SS

2. VALVE SERIES

Orifice Size	Designator
2.3mm, 4.4mm	PV1
7.1mm	PV2

* The Orifice Size is defermined using valves with TKF tube fitting end connections.
* For more details, See the Dimensions Table.

3. VENT PORT OPTION

Vent Port Option	Designator
Without	Blank
Downstream Vent	D

4. INLET/OUTLET CONNECTION SIZE & TYPE

Inlet/Outlet Connection Size	Designator
1/8″	2
1/4″	4
3/8″	6
1/2″	8
6mm	6M
8mm	8M
10mm	10M
12mm	12M

Inlet/Outlet Connection Type	Designator
Lok	SW
Male NPT	NM
Female NPT	NF
Male ISO① Tapered	PTM
Female ISO① Tapered	PTF

① Refer to specifications ISO 7/1, BS EN 10226-1, DIN-2999, and JIS B0203.

5. HANDLE TYPE

Handle Type	Designator
Dark green Plastic Handle (Standard)	Blank
Black Plastic Handle	BK
Blue Plastic Handle	BL
Red Plastic Handle	RD
Locking Handle	L
Metal Handle (stainless steel)	S
Metal Handle (aluminum)	A

6. SEAL MATERIAL

Seal Material	Designator
PTFE-coated fluorocarbon FKM (Standard)	Blank
PTFE-coated Buna N	PBN
PTFE-coated ethylene propylene	PEP
PTFE-coated neoprene	PNE
Kalrez®	KZ

FEATURES

- Straight pattern
- Simple and Compact design
- Replacable plug assembly and O-ring

TECHNICAL DATA

TEMPERATURE - WORKING PRESSURE RATING

- Based on PTFE-coated fluorocarbon FKM O-rings.

Series	PV1 / PV2
Material	316 SS
Temperature, °F (°C)	Working Pressure, psig (bar)
–10 (–23) to 100 (37)	3,000 (206)
150 (65)	3,000 (206)
250 (121)	2,000 (137)
300 (148)	1,000 (68.9)
350 (176)	1,000 (68.9)
400 (204)	1,000 (68.9)

OPERATION

Open

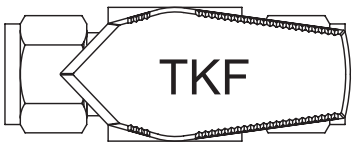

Forward-Flow Throttling

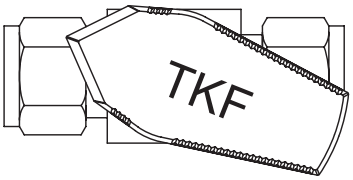

Closed

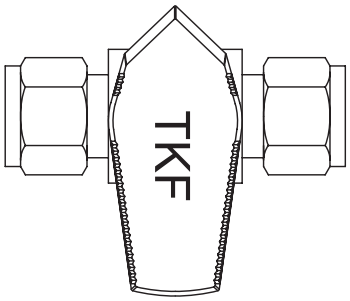

FLOW DATA AT 70˚F (20˚C)

End Connections		Cv	Series	Pressure Drop to Atmosphere, psi (bar)					
				1 (0.068)	5 (0.34)	10 (0.68)	1 (0.068)	5 (0.34)	10 (0.68)
Inlet/Outlet	Size			Air Flow, std ft3/min (std L/min)			Water Flow, U.S. gal/min (L/min)		
Fractional TKF tube fittings	1/8″	0.1	PV1	0.3 (8.4)	0.8 (22)	1.1 (31)	0.1 (0.37)	0.2 (0.75)	0.3 (1.1)
	1/4″	1.6	PV1	6.0 (160)	13 (360)	18 (500)	1.6 (6.0)	3.6 (13)	5.1 (19)
	3/8″	1.1	PV1	4.1 (110)	8.9 (250)	12 (330)	1.1 (4.1)	2.5 (9.4)	3.5 (13)
		4.4	PV2	23 (650)	52 (1,470)	72 (2,030)	6.4 (24)	14 (52)	20 (75)
	1/2″	4.4	PV2	16 (450)	35 (990)	49 (1,380)	4.4 (16)	9.8 (37)	13 (49)
Metric TKF tube fittings	6mm	1.6	PV1	6.0 (160)	13 (360)	18 (500)	1.6 (6.0)	3.6 (13)	5.1 (19)
	8mm	4.4	PV2	23 (650)	52 (1,470)	72 (2030)	6.4 (24)	14 (52)	20 (75)
	10mm								
	12mm	4.8	PV2	17 (480)	39 (1,100)	54 (1,520)	4.8 (18)	10 (37)	15 (56)
Female NPT	1/8″	1.2	PV1	4.4 (120)	9.7 (270)	13 (360)	1.2 (4.5)	2.7 (10)	3.8 (14)
	1/4″	0.9	PV1	3.3 (93)	7.3 (200)	10 (280)	0.9 (3.4)	2.0 (7.5)	2.8 (10)
		4.3	PV2	16 (450)	34 (960)	48 (1,350)	4.3 (16)	9.6 (36)	13 (49)
	1/2″	2.7	PV2	10 (280)	21 (590)	30 (840)	2.7 (10)	6.0 (22)	8.5 (32)
Male NPT	1/8″	1	PV1	3.7 (100)	8.1 (220)	11 (310)	1.0 (3.7)	2.2 (8.3)	3.2 (12)
	1/4″								
	1/2″	2.4	PV2	9.0 (250)	19 (530)	27 (760)	2.4 (9.0)	5.4 (20)	7.6 (28)
Male NPT/ Swagelok tube fitting	1/4″	0.9	PV1	3.3 (93)	7.3 (200)	10 (280)	0.9 (3.4)	2.0 (7.5)	2.8 (10)
	1/4″	1	PV1	3.7 (100)	8.1 (220)	11 (310)	1.0 (3.7)	2.2 (8.3)	3.2 (12)
Male/Female NPT	1/4″	0.9	PV1	3.3 (93)	7.3 (200)	10 (280)	0.9 (3.4)	2.0 (7.5)	2.8 (10)
Female ISO① Tapered	1/2″	2.7	PV2	10 (280)	21 (590)	30 (840)	2.7 (10)	6.0 (22)	8.5 (32)

① Refer to specifications ISO 7/1, BS EN 10226-1, DIN-2999, and JIS B0203.

TESTING

■ Every valve is factory tested for shutoff at 600 psig (41.3 bar)

CLEANING AND PACKAGING

■ Every valve is cleaned and packaged in accordance with the standard specification of cleaning and packaging.

MATERIALS OF CONSTRUCTION

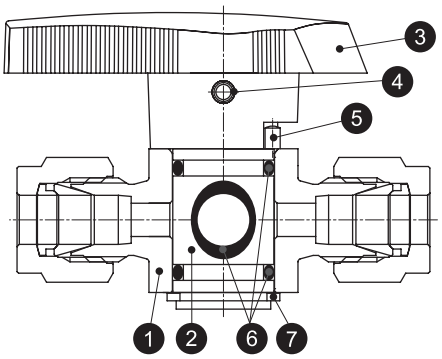

No.	Description	Material Material Grade/ASTM Specification
1	Body	316 SS / A479
2	Plug	PTFE-coated 316 SS / A479
3	Handle	Polythermide
4	Pin	304 SS
5	Stop Pin	316 SS
6	O-Ring	PTFE-coated fluorocarbon FKM
7	Snap Ring	304 SS

DIMENSIONS

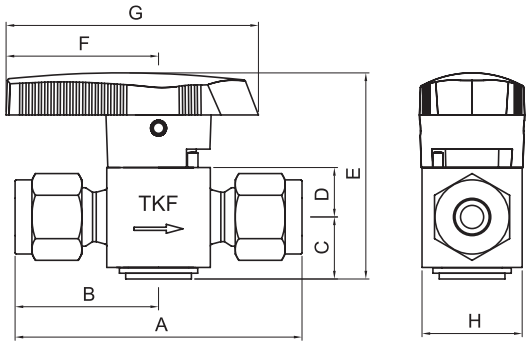

PV1 SERIES

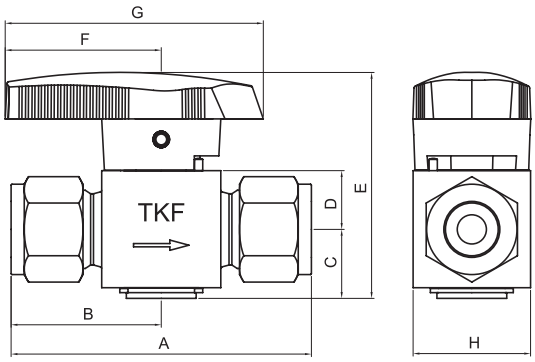

PV2 SERIES

Ordering Number		Orifice in. (mm)	Cv	End Connections		Dimensions in. (mm)							
Series	Part No.			Inlet	Outlet	A	B	C	D	E	F	G	H
PV1	2SW	0.091 (2.3)	0.1	1/8″ Lok		1.99 (50.5)	0.995 (25.25)	0.46 (11.8)	0.37 (9.4)	1.54 (39.2)	1.14 (29.0)	1.89 (48.0)	0.75 (19.05)
	4SW	0.173 (4.4)	1.6	1/4″ Lok		2.17 (55.1)	1.085 (27.55)						
	6SW		1.1	3/8″ Lok		2.29 (58.2)	1.145 (29.1)						
	6MSW		1.6	6mm Lok		2.17 (55.1)	1.085 (27.55)						
	2NF		1.2	1/8″ Female NPT		1.78 (45.2)	0.89 (22.6)						
	4NF		0.9	1/4″ Female NPT		2.09 (53.1)	1.045 (26.55)						
	2NM		1.0	1/8″ Male NPT		1.53 (38.9)	0.765 (19.45)						
	4NM			1/4″ Male NPT		1.90 (48.3)	0.95 (24.15)						
	4PTF		0.9	1/4″ Female ISO ① Tapered		2.21 (56.1)	1.105 (28.05)						
PV2	6SW	0.280 (7.1)	6.4	3/8″ Lok		2.66 (67.6)	1.33 (33.8)	0.66 (16.8)	0.56 (14.2)	2.14 (54.4)	1.50 (38.1)	2.47 (62.7)	1.125 (28.58)
	8SW		4.4	1/2″ Lok		2.88 (73.2)	1.44 (36.6)						
	8MSW		6.4	8mm Lok		2.66 (67.6)	1.33 (33.8)						
	10MSW			10mm Lok		2.68 (68.1)	1.34 (34.05)						
	12MSW		4.8	12mm Lok		2.96 (75.2)	1.48 (37.6)						
	4NF		4.3	1/4″ Female NPT		2.38 (60.5)	1.19 (30.25)						
	8NF		2.7	1/2″ Female NPT		2.88 (73.2)	1.44 (36.6)						
	8NM		2.4	1/2″ Male NPT		2.64 (67.1)	1.32 (33.55)						
	8PTF		2.7	1/2″ Female ISO ① Tapered		3.14 (79.8)	1.57 (39.9)						

① Refer to specifications ISO 7/1, BS EN 10226-1, DIN-2999, and JIS B0203.

Toggle Valves

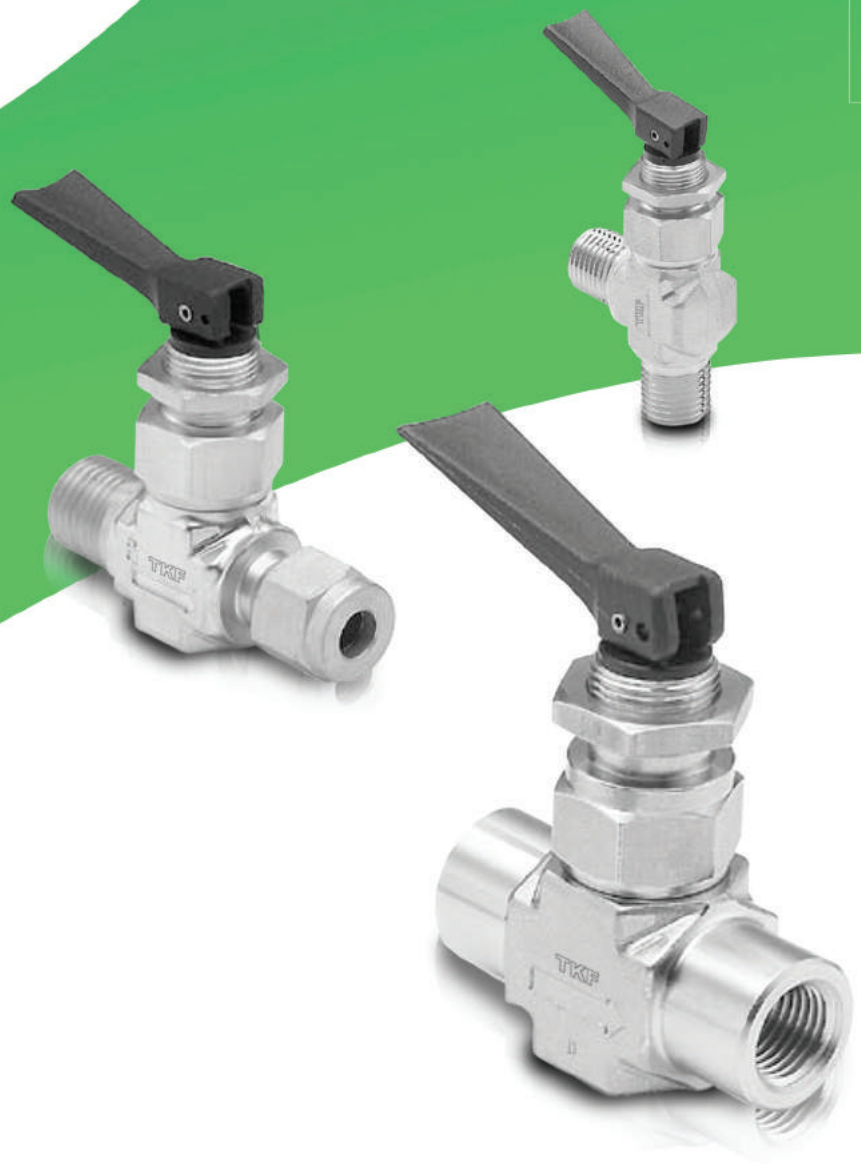

TV SERIES

- Maximum Working Pressure : 300 psig (20.6 bar) @ 100˚F (37˚C)
- Working Temperature Range : -20˚F(-28˚C) to 200˚F(93˚C)

TK-FUJIKIN CORPORATION
Fujikin Carp Group

ORDERING INFORMATION

SS	-	TV1	A	-	4SW	-	BL	-	KZ
1		2	3		4		6		7

1. BODY MATERIAL

Material	Designator
316 SS	SS

2. VALVE SERIES

* Orifice Size	Designator
2.0mm	TV1
3.2mm	TV2
6.4mm	TV3

* The Orifice Size is determined using valves with TKF tube fitting end connections.
* For more details, See the Dimensions Table.

3. BODY PATTERN

Body Pattern	Designator
2-Way Straight(Standard)	Blank
2-Way Angle	A

4. INLET/OUTLET CONNECTION SIZE & TYPE

Inlet/Outlet Connection Size	Designator
1/8"	2
1/4"	4
3/8"	6
1/2"	8
3mm	3M
6mm	6M
8mm	8M
10mm	10M
12mm	12M

Inlet/Outlet Connection Type	Designator
Lok	SW
Male NPT	NM
Female NPT	NF
Male ISO① Tapered	PTM
Female ISO① Tapered	PTF

① Refer to specifications ISO 7/1, BS EN 10226-1, DIN-2999, and JIS B0203.

5. HANDLE TYPE

Handle Type	Designator
Black nylon Handle (Standard)	Blank
Blue nylon Handle	BL
Green nylon Handle	GR
Orange nylon Handle	OG
Red nylon Handle	RD
Yellow nylon Handle	YW
Anodized Black aluminum Handle	ABK
316 SS Handle	S

6. SEAL MATERIAL

Seal Material	Designator
Fluorocarbon FKM(Standard)	Blank
Buna C	BC
Buna N	BN
Ethylene propylene	EP
Kalrez®	KZ
Silicone	SI

FEATURES

- Compact design
- Open and Closes quickly
- Variety of End Connection
- Straight or Angle pattern

TECHNICAL DATA

TEMPERATURE - WORKING PRESSURE RATING

*

Series	Orifice in. (mm)	Temperature Rating °F (°C)	Working Pressure psig (bar)
TV1	0.079 (2.0)	–20 to 200 (–28 to 93)	300 (20.6)
TV2	0.126 (3.2)		
TV3	0.252 (6.4)		200 (13.7)

* Ratings based on manual valve.

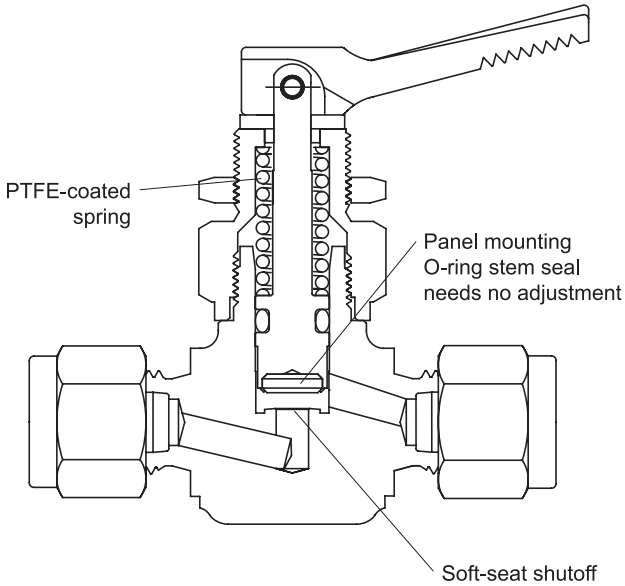

TESTING

- For leakage, Each valve is tested with nitrogen at 200psig (13.7bar)

CLEANING AND PACKAGING

- Every valve is cleaned and packaged in accordance with the standard specification of cleaning and packaging.

MATERIALS OF CONSTRUCTION

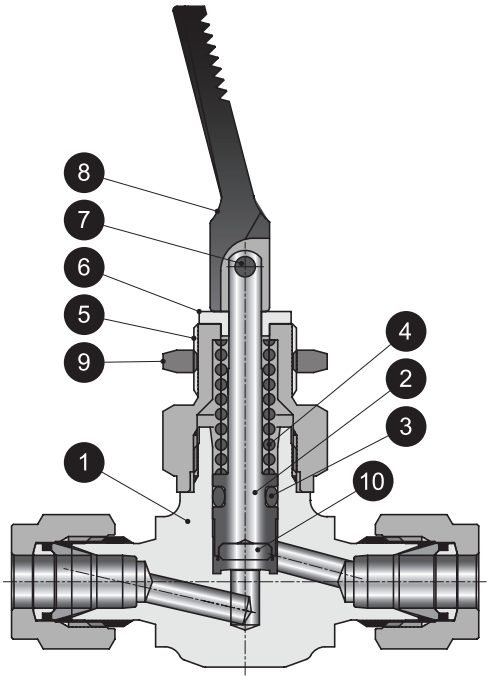

No.	Description	Material
		Material Grade / ASTM Specification
1	Body	316 SS / A182
2	Stem	316 SS / A276
3	O-Ring	Fluorocarbon FKM
4	Spring	631 SS
5	Packing Nut	316 SS / A276
6	Washer	Nylon
7	Roll Pin	304 SS
8	Handle	Nylon
9	Panel Nut	304 SS / A276
10	Stem Tip	PTFE

DIMENSIONS

Straight Pattern

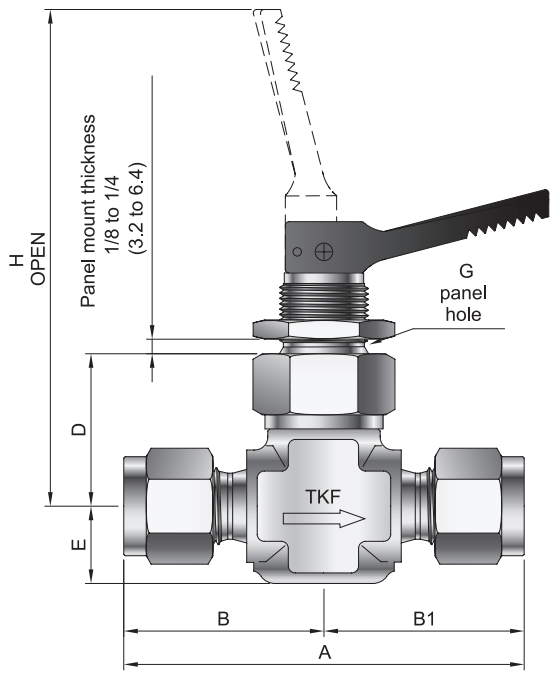

Angle Pattern

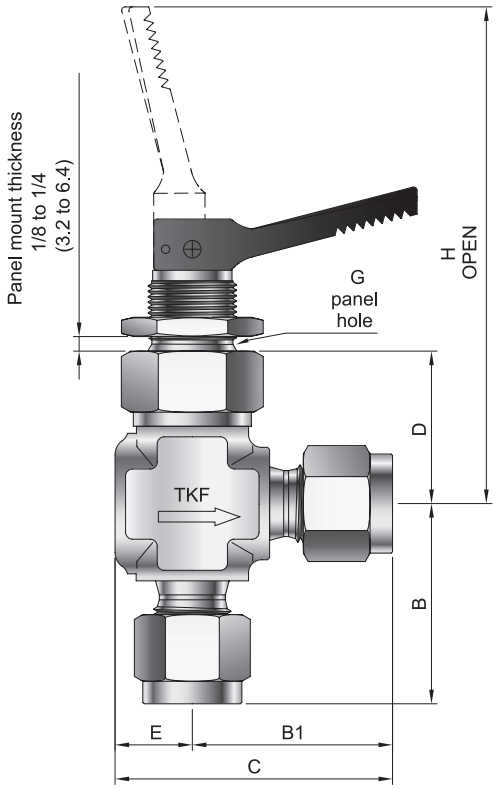

Ordering Number		Orifice in. (mm)	Cv	End Connections		Dimensions in. (mm)							
Series	Part No.			Inlet	Outlet	A	B	B1	C	D	E	G	H
TV1	2SW	0.079 (2.0)	0.11	1/8” Lok		1.96(4.98)	0.98(24.9)		1.29(3.28)	0.92 (23.4)	0.31 (7.9)	0.53 (13.5)	2.87 (72.9)
	3MSW			3mm Lok									
	2NM			1/8” Male NPT		1.50(38.1)	0.75(19.0)		1.06(27.0)				
	2NM 2SW			1/8” Male NPT	1/8” Lok	1.73(43.9)	0.75(19.0)	0.98(24.9)	1.29(32.8)				
TV2	4SW	0.126 (3.5)	0.20	1/4” Lok		2.26(57.4)	1.13(28.7)		1.50(38.1)	0.86 (21.8)	0.38 (9.5)		2.81 (71.4)
	6MSW			6mm Lok									
	8MSW			8mm Lok		2.22(56.4)	1.11(28.2)		1.48(37.6)				
	2NF			1/8” Female NPT		1.63(41.4)	0.81(20.6)		1.19(30.2)				
	2NM			1/8” Male NPT		1.50(38.1)	0.75(19.0)		1.06(27.0)	0.92(23.4)	0.31(7.9)		2.87(72.9)
	4NM			1/4” Male NPT		1.96(49.8)	0.98(24.9)		1.36(34.5)	0.86 (21.8)	0.38 (9.5)		2.81 (71.4)
	4NM 4SW			1/4” Male NPT	1/4” Lok	2.11(53.6)	0.98(24.9)	1.13(28.7)	1.50(38.1)				
	2NM 2NF			1/8” Male NPT	1/8” Female NPT	1.63(41.4)	0.81(20.6)		1.19(30.2)				
TV3	6SW	0.252 (6.35)	0.7	3/8” Lok		2.58(65.5)	1.29(32.8)		1.79(45.5)	1.06 (26.9)	0.50 (12.7)	0.66 (16.8)	3.56 (90.4)
	8SW			1/2” Lok		2.80(71.1)	1.40(35.6)		1.90(48.3)				
	10MSW			10mm Lok		2.72(69.1)	1.36(34.5)		1.86(47.2)				
	12MSW			12mm Lok		2.92(74.2)	1.46(37.1)		1.96(49.8)				
	4NF			1/4” Female NPT		2.12(53.8)	1.06(26.9)		1.56(39.6)				
	6NM			3/8” Male NPT		2.25(57.2)	1.12(28.4)		1.62(41.1)				

Check Valves

ICH/ICL SERIES

- Maximum Working Pressure
  ICH SERIES : 6,000 psig (413 bar) @ 100˚F (37˚C)
  ICL SERIES : 3,000 psig (206 bar) @ 100°F (37˚C)
- Cracking Pressure : 1/3 psig (0.03 bar) to @ 25 psig (1.80 bar)
- Working Temperature Range : -10˚F(-23˚C) to 375˚F(190˚C)

TK-FUJIKIN CORPORATION
Fujikin Carp Group

ICH SERIES ORDERING INFORMATION

SS	—	ICH1	—	4SW	—	1/3	—	EP
1		2		3		4		5

1. BODY MATERIAL

Material	Designator
316 SS	SS

2. VALVE SERIES

* Orifice Size	Designator
4.8mm	ICH1
7.9mm	ICH2
15mm	ICH3

* The Orifice Size is determined using valves with TKF tube fitting end connections.
* For more details, See the Dimensions Table.

3. INLET/OUTLET CONNECTION SIZE & TYPE

Inlet/Outlet Connection Size	Designator
1/4"	4
1/8"	2
3/8"	6
1/2"	8
6mm	6M
8mm	8M
10mm	10M
12mm	12M

Inlet/Outlet Connection Type	Designator
Lok	SW
Male NPT	NM
Female NPT	NF
Male ISO①Tapered	PTM
Female ISO①Tapered	PTF
MFS Male	VM

① Refer to specifications ISO 7/1, BS EN 10226-1, DIN-2999, and JIS B0203.

4. CRACKING PRESSURE

Cracking Pressure	Designator
1/3 psi	1/3
1 psi	1
5 psi	5
10 psi	10
25 psi	25

5. O-RING MATERIAL

O-Ring Material	Designator
Fluorocarbon FKM (Standard)	Blank
Buna N	BN
Ethylene Propylene	EP
Neoprene	NE

FEATURES

- Stainless Steel Construction
- Poppet design
- In-line pattern
- Variety of end connection

TECHNICAL DATA

TEMPERATURE - WORKING PRESSURE RATING

Series	ICH1	ICH2	ICH3
Temperature, °F (°C)	Working Pressure, psig (bar)		
-10 (-23) to 100 (37)	6,000 (413)		5,000 (344)
-10 (-23) to 200 (93)	5,160 (355)		4,290 (295)
-10 (-23) to 250 (121)	4,910 (338)		4,080 (281)
-10 (-23) to 300 (148)	4,660 (321)		3,875 (266)
-10 (-23) to 375 (190)	4,280 (294)		3,560 (245)

CRACKING AND RESEAL PRESSURES AT 70°F (20°C)

	Nominal Cracking Pressure psi (bar)	Cracking Pressure Range psi (bar)	Reseal Pressure psi (bar)
Cracking Pressure psi (bar)	1/3 (0.03)	Up to 3 (0.21)	Up to 6 (0.42) back pressure
	1 (0.07)	Up to 4 (0.28)	Up to 5 (0.35) back pressure
	5 (0.35)	3 to 9 (0.21 to 0.63)	Up to 2 (0.14) back pressure
	10 (0.69)	7 to 15 (0.49 to 1.1)	3 (0.21) or more upstream pressure
	25 (1.80)	20 to 30 (1.4 to 2.1)	17 (1.2) or more upstream pressure
Seal Material	Fluorocarbon FKM		

Caution :
- For valves not actuated for a period of time, initial cracking essure may be higher than the set cracking pressure.
- When using a Check Valve under the low pressure, Noise can be generated due to chattering of the spring.

FLOW DATA AT 70°F (20°C)

ICH SERIES

Nominal Cracking Pressures — 1 psi (0.07 bar) — 10 psi (0.69 bar) — 25 psi (1.8 bar)

Air

ICH1 Series

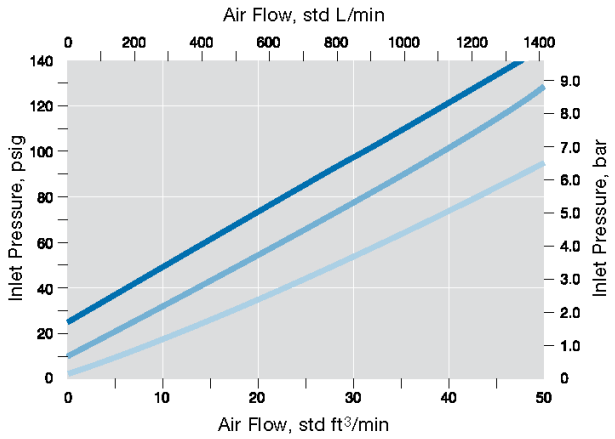

ICH2 Series

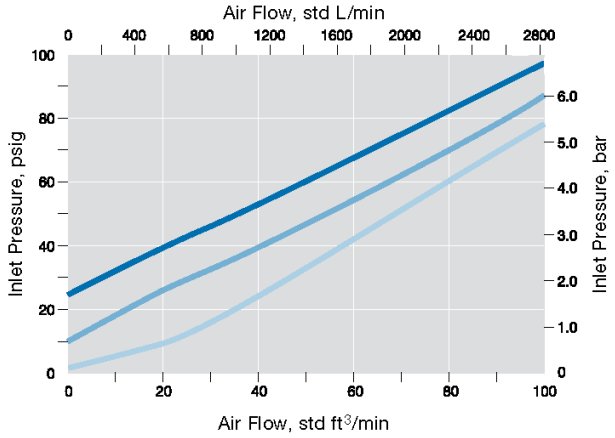

ICH3 Series

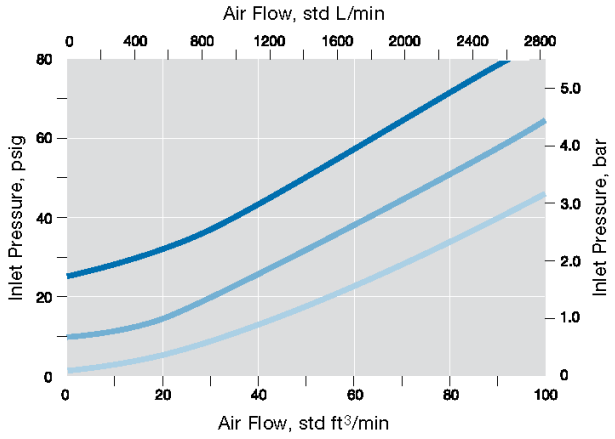

Water

ICH1 Series

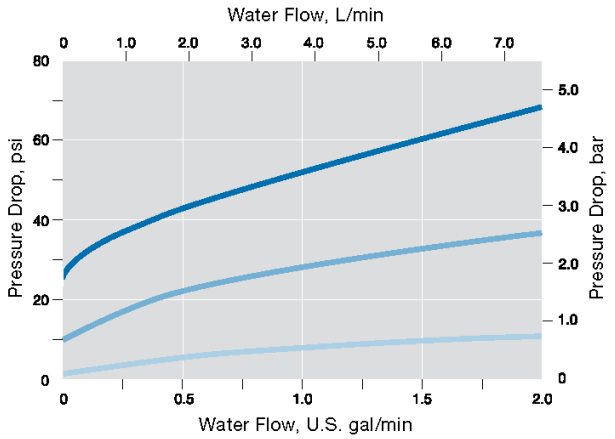

ICH2 Series

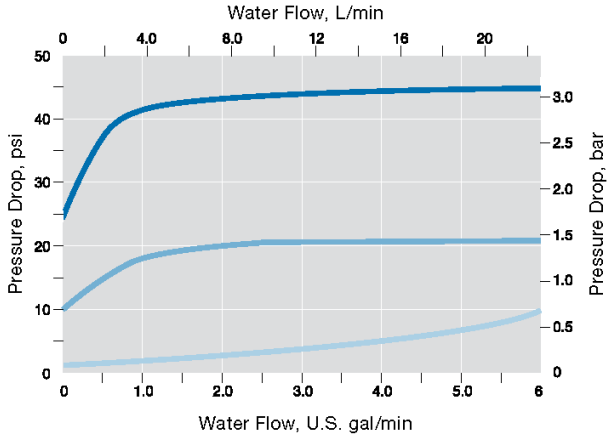

ICH3 Series

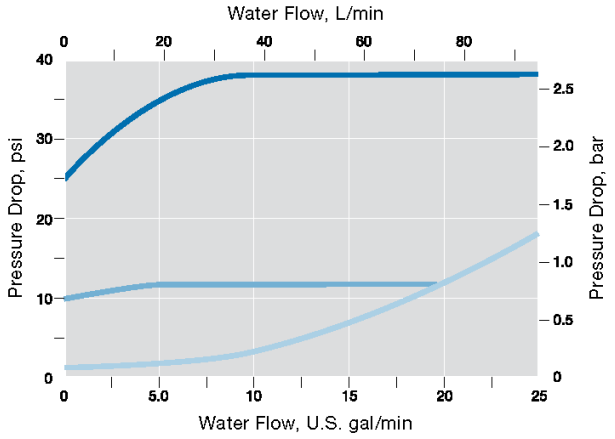

Testing

- Every valve is factory tested for cracking and reseal performance.

Cleaning and Packaging

- Every valve is cleaned and packaged in accordance with the standard specification of cleaning and packaging.

MATERIALS OF CONSTRUCTION

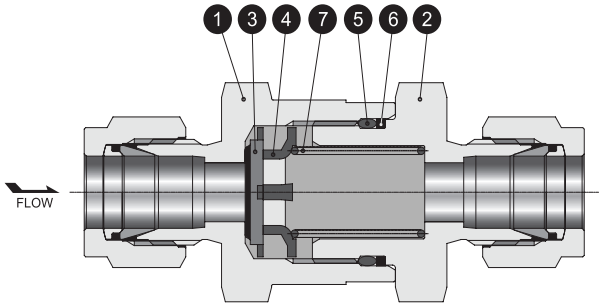

No.	Description	Material Material Grade / ASTM Specification
1	Inlet Body	316 SS / A479
2	Outlet Body	316 SS / A479
3	Poppet Assembly	FKM-bonded 316 SS / A479
4	Poppet Stoper	316 SS / A276
5	O-Ring	Fluorocarbon FKM
6	Backup Ring	PTFE
7	Spring	316 SS

DIMENSIONS

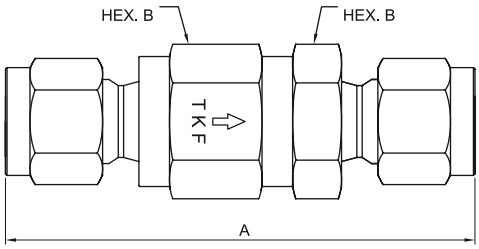

ICH1 SERIES

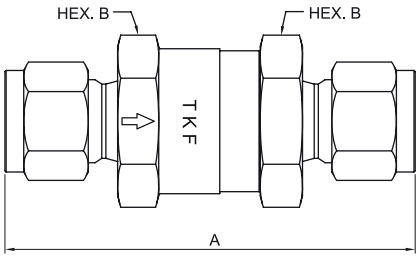

ICH2 / ICH3 SERIES

Order Number		Orifice in. (mm)	Cv	End Connections		Pressure Rating psig (bar)	Dimensions in. (mm)	
Series	Part No.			Inlet	Outlet		A	B
ICH1	2SW	0.189 (4.8)	0.67	1/8" Lok		6,000 (413)	2.27 (57.7)	11/16(17.5)
	4SW			1/4" Lok			2.43 (61.7)	
	6MSW			6mm Lok			2.43 (61.7)	
	4NF			1/4" Female NPT			2.13 (54.1)	
	2NM			1/8" Male NPT			1.79 (45.5)	
	4NM			1/4" Male NPT			2.17 (55.1)	
	4PTF			1/4" Female ISO① Tapered			2.28 (57.9)	
	4PTM			1/4" Male ISO① Tapered			2.17 (55.1)	
	4VM			1/4" MFS① Male			2.28 (57.9)	
ICH2	6SW	0.307 (7.8)	1.8	3/8" Lok		6,000 (413)	2.75 (69.9)	1(25.4)
	8SW			1/2" Lok			2.96 (75.2)	
	8MSW			8mm Lok			2.7 (68.6)	
	10MSW			10mm Lok			2.8 (71.1)	
	12MSW			12mm Lok			2.96 (75.2)	
	6NF			3/8" Female NPT			2.55 (64.8)	
	8NF			1/2" Female NPT		4,600 (316)	3.03 (77.0)	1 1/16(27)
	6NM			3/8" Male NPT		6,000 (413)	2.36 (59.9)	1(25.4)
	8NM			1/2" Male NPT			2.73 (69.3)	
	8PTF			1/2" Female ISO① Tapered		4,600 (316)	3.29 (83.6)	1 1/16(27)
	8PTM			1/2" Male ISO① Tapered		6,000 (413)	2.73 (69.3)	1(25.4)
	8VM			1/2" MFS Male		3,500 (241)	2.73 (69.3)	
ICH3	12SW	0.591 (15.0)	4.7	3/4" Lok		5,000 (344)	3.52 (89.4)	1 5/8(41.3)
	16SW			1" Lok		4,700 (323)	3.88 (98.6)	
	22MSW			22mm Lok		5,000 (344)	3.48 (88.4)	
	25MSW			25mm Lok			3.88 (98.6)	
	12NF			3/4" Female NPT		4,300 (296)	3.23 (82.0)	
	16NF			1" Female NPT		4,100 (282)	3.83 (97.3)	
	12NM			3/4" Male NPT		5,000 (344)	3.29 (83.6)	
	16NM			1" Male NPT			3.67 (93.2)	
	12PTF			3/4" Female ISO① Tapered		4,300 (296)	3.55 (90.2)	
	16PTF			1" Female ISO① Tapered		4,100 (282)	3.83 (97.3)	
	12PTM			3/4" Male ISO① Tapered		5,000 (344)	3.35 (85.1)	
	16PTM			1" Male ISO① Tapered			3.67 (93.2)	
	12VM			3/4" MFS Male		3,000 (206)	3.78 (96.0)	

① Refer to specifications ISO 7/1, BS EN 10226-1, DIN-2999, and JIS B0203.

ICL SERIES ORDERING INFORMATION

SS	—	ICL1	—	4SW	—	1/3	—	EP
1		2		3		4		5

1. BODY MATERIAL

Material	Designator
316 SS	SS

2. VALVE SERIES

* Orifice Size	Designator
4.8mm	ICL1
7.1mm	ICL2
10.0mm	ICL3
13.5mm	ICL4
16.0mm	ICL5
18.0mm	ICL6

* The Orifice Size is determined using valves with TKF tube fitting end connections.
* For more details, See the Dimensions Table.

3. INLET/OUTLET CONNECTION SIZE & TYPE

Inlet/Outlet Connection Size	Designator
1/4"	4
1/8"	2
3/8"	6
1/2"	8
3/4"	12
1"	16
6mm	6M
8mm	8M
10mm	10M
12mm	12M

Inlet/Outlet Connection Type	Designator
Lok	SW
Male NPT	NM
Female NPT	NF
Male ISO①Tapered	PTM
Female ISO①Tapered	PTF
MFS Male	VM

① Refer to specifications ISO 7/1, BS EN 10226-1, DIN-2999, and JIS B0203.

4. CRACKING PRESSURE

Cracking Pressure	Designator
1/3 psi	1/3
1 psi	1
10 psi	10
25 psi	25

5. O-RING MATERIAL

O-Ring Material	Designator
Fluorocarbon FKM (Standard)	Blank
Buna N	BN
Ethylene Propylene	EP
Neoprene	NE

FEATURES

- Stainless Steel Construction
- Poppet design
- In-line pattern
- Variety of end connection

TECHNICAL DATA

- Cracking pressure-the upstream pressure at which the first indication of flow occurs.
- Reseal pressure-the pressure at which there is no indication of flow.

Size	Maximum Flow Coefficient(Cv)	Nominal Cracking Pressure psi(bar)	Downsteam Pressure at 70℉ (20℃) psig(bar)
1/8"	0.1	1/3, 1, 10, 25 (0.03, 0.07, 0.69, 1.8)	1,000(68.9)
1/4"	0.47		
3/8"	1.47		200(13.7)
1/2"	1.68		
3/4", 1"	4.48		

TEMPERATURE - WORKING PRESSURE RATING

Series	ICL1	ICL2	ICL3	ICL4	ICL5	ICL6
Temperature, °F (°C)	Working Pressure, psig (bar)					
-10 (-23) to 100 (37)	3,000 (206)				2,000 (137)	
-10 (-23) to 200 (93)	2,575 (177)				1,715 (118)	
-10 (-23) to 250 (121)	2,450 (168)				1,630 (112)	
-10 (-23) to 300 (148)	2,325 (160)				1,545 (106)	
-10 (-23) to 375 (190)	2,185 (150)				1,450 (99.9)	

CRACKING AND RESEAL PRESSURES AT 70°F (20°C)

	Nominal Cracking Pressure psi (bar)	Cracking Pressure Range psi (bar)	Reseal Pressure psi (bar)
Cracking Pressure psi (bar)	1/3 (0.03)	Up to 3 (0.21)	Up to 6 (0.42) back pressure
	1 (0.07)	Up to 4 (0.28)	Up to 5 (0.35) back pressure
	10 (0.69)	7 to 15 (0.74 to 1.1)	3 (0.21) or more upstream pressure
	25 (1.80)	20 to 30 (1.4 to 2.1)	17 (1.2) or more upstream pressure
Seal Material	Fluorocarbon FKM		

Caution :

- For valves not actuated for a period of time, initial cracking pressure may be higher than set cracking pressire.
- When using a Check Valve under the low pressure, Noise can be generated due to chattering of the spring.

FLOW DATA AT 70°F (20°C)

ICL SERIES

Nominal Cracking Pressures

1/8", 3/8", 3/4", 1" Series — 1 psi (0.007 bar) — 10 psi (0.069 bar) — 25 psi (1.8 bar)
1/4", 1/2", Series — 1 psi (0.007 bar) — 10 psi (0.069 bar) — 25 psi (1.8 bar)

Air

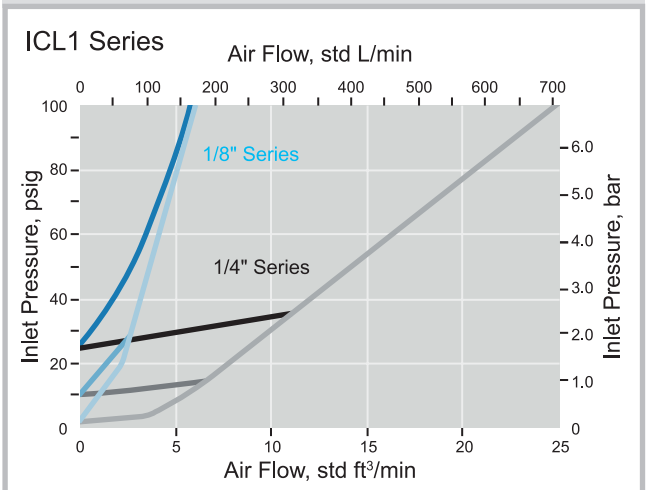

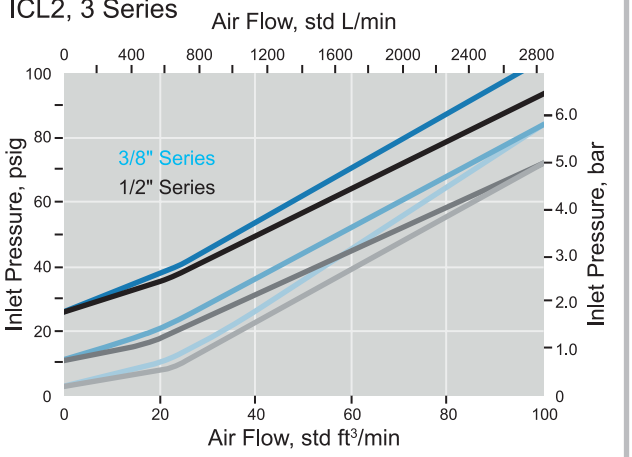

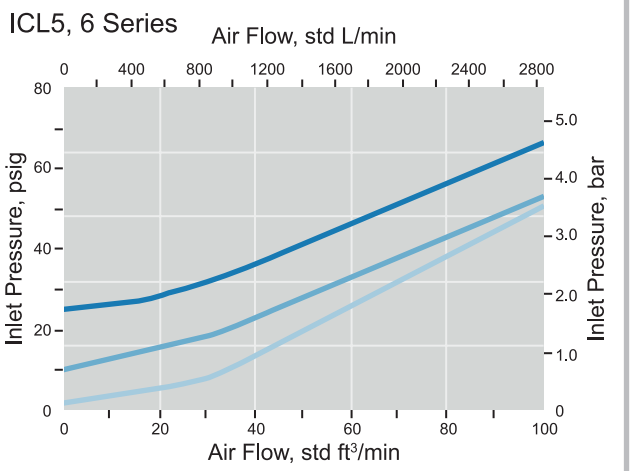

Water

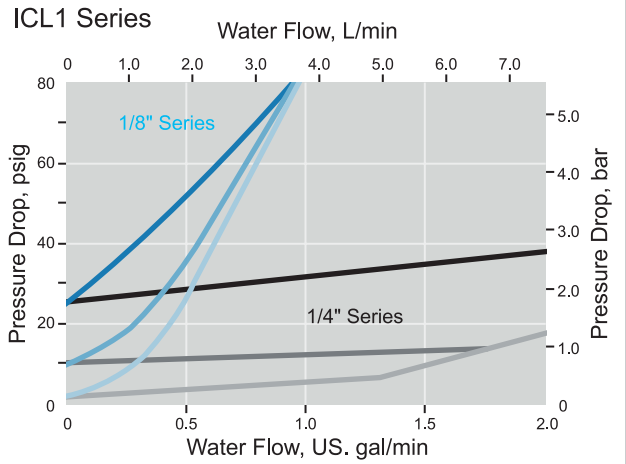

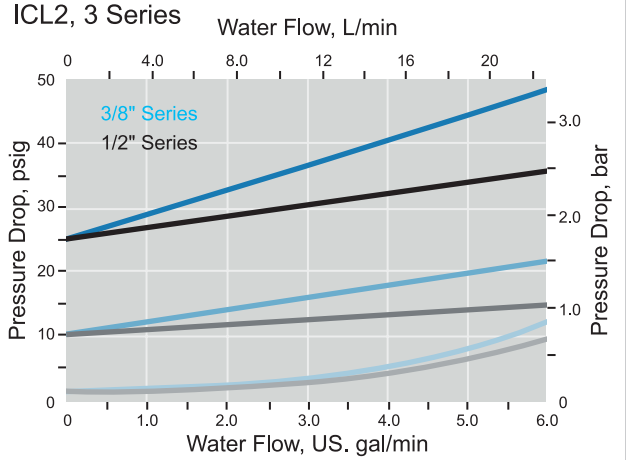

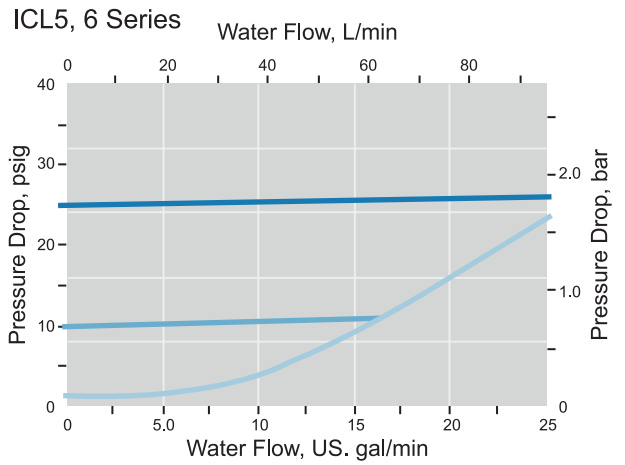

Testing

- Every valve is factory tested for cracking and reseal performance.

Cleaning and Packaging

- Every valve is cleaned and packaged in accordance with the standard specification of cleaning and packaging.

MATERIALS OF CONSTRUCTION

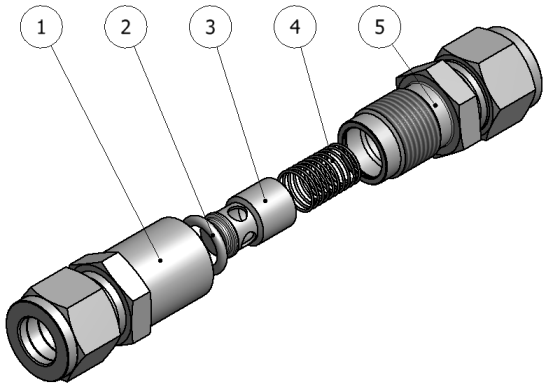

No.	Description	Material Material Grade / ASTM Specification
1	Inlet Body	316 SS / A276
2	O-Ring	FKM
3	Poppet	316 SS / A276
4	Spring	304 SS
5	Outlet Body	316 SS / A276

DIMENSIONS

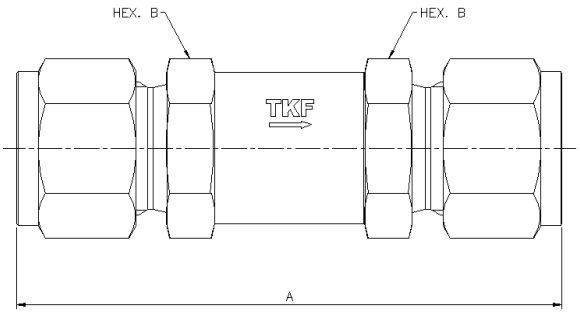

Order Number		Orifice in. (mm)	Cv	End Connections		Pressure Rating psig (bar)	Dimensions in. (mm)	
Series	Part No.			Inlet	Outlet		A	B
ICL1	2SW	0.189 (4.8)	0.16	1/8" Lok		3,000 (206)	2.19 (55.6)	5/8 (15.9)
	2NF		0.47	1/8" Female NPT			1.75 (44.4)	
	2NM			1/8" Male NPT			1.83 (46.6)	
	6MSW			6mm Lok			2.36 (60.0)	
	4SW			1/4" Lok				
	4NM			1/4" male NPT			2.10 (53.4)	
	4NF			1/4" Female NPT			2.15 (54.6)	3/4 (19.1)
ICL2	6SW	0.279 (7.1)	1.48	3/8" Lok			2.94 (74.8)	7/8 (22.2)
	10MSW			10mm Lok				
	6NM			3/8" Male NPT			2.54 (64.6)	
ICL3	6NF	0.393 (10.0)	1.70	3/4" Fmale NPT			2.51 (63.8)	
	8SW			1/2" Lok			3.15 (80.2)	
	12MSW			12mm Lok				
	8NM			1/2" Male NPT			2.92 (74.4)	
ICL4	8NF	0.531 (13.5)	2.60	1/2" Female NPT			3.33 (84.7)	1 1/8 (28.6)
	10SW			5/8" Lok			3.61 (91.8)	
ICL5	12SW	0.630 (16.0)	5.20	3/4" Lok		2,000 (137)	4.36 (110.7)	1 1/4 (31.8)
	12NM			3/4" Male NPT			4.14 (105.3)	
	12NF			3/4" Female NPT			4.05 (103.0)	
ICL6	16SW	0.708 (18.0)	8.00	1" Lok			4.77 (121.2)	1 3/8 (34.9)
	16NM			1" Male NPT			4.57 (116.2)	
	16NF			1" Female NPT			4.38 (111.4)	1 5/8 (41.3)

① Refer to specifications ISO 7/1, BS EN 10226-1, DIN-2999, and JIS B0203.

Relief Valves

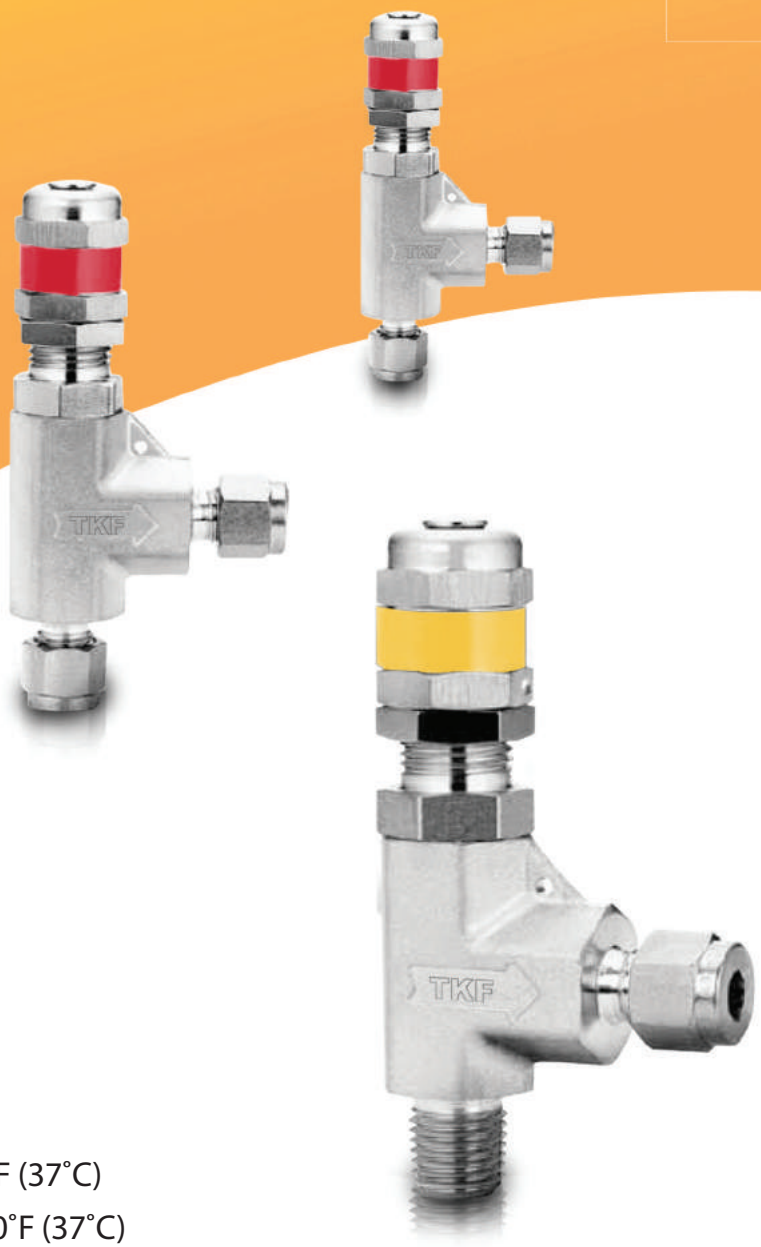

RVL/RVH SERIES

- Maximum Working Pressure
  RVL SERIES : 300 psig (20.6 bar) @ 100˚F (37˚C)
  RVH SERIES : 6,000psig (420 bar) @ 100˚F (37˚C)
- Working Temperature Range : -10˚F(-23˚C) to 300˚F(148˚C)
- Cracking Pressure
  RVL SERIES : 10 psig (0.68 bar) to 225 psig (15.5 bar)
  RVH SERIES : 50psig (3.4 bar) to 6,000 pisg (413 bar)

TK-FUJIKIN CORPORATION
Fujikin Carp Group

ORDERING INFORMATION

SS — RVH1 — 4SW — A

1 2 3 4

1. BODY MATERIAL

Material	Designator
316 SS	SS

2. VALVE SERIES

*

Orifice Size	Designator
4.8 mm	RVL1
	RVH1
6.4 mm	RVL2
	RVH2

* The Orifice Size is determined using valves with TKF tube fitting end connections.
* For more details, See the Dimensions Table.

3. INLET/OUTLET CONNECTION SIZE & TYPE

Inlet/Outlet Connection Size	Designator
1/4"	4
1/2"	8
6mm	6M
8mm	8M
12mm	12M

Inlet/Outlet Connection Type	Designator
Lok	SW
Male NPT	NM
Female NPT	NF
Male ISO① Tapered	PTM
Female ISO① Tapered	PTF

① Refer to specifications ISO 7/1, BS EN 10226-1, DIN-2999, and JIS B0203.

4. SPRING SPECIFICATIONS

Set Pressure Range	Spring Color	Designator
50 to 350 psi	Blue	A
350 to 750 psi	Yellow	B
750 to 1,500 psi	Purple	C
1,500 to 2,250 psi	Orange	D
2,250 to 3,000 psi	Brown	E
3,000 to 4,000 psi	White	F
4,000 to 5,000 psi	Red	G
5,000 to 6,000 psi	Green	H

* No spring/cracking pressure designator is required for RVL low pressure series valves.

FEATURES

RVL SERIES (LOW-PRESSURE VALVES)

- Service up to 300 psig (20.6 bar)
- One spring for the full set pressure range

RVH SERIES (HIGH-PRESSURE VALVES)

- Service up to 600 psig (413 bar)
- Multiple springs for a selection of set pressure ranges

TECHNICAL DATA

TEMPERATURE - WORKING PRESSURE RATING

Series	RVH1	RVH2	RVL1 and RVL2
Working Pressure at 70°F (20°C)	6,000 psig (413 bar)	6,000 psig (413 bar)	300psig (20.6 bar)
Set Pressure	50 to 6,000 psig (3.4 to 413 bar)	50 to 1,500 psig (3.4 to 103 bar)	10 to 225 psig (0.68 to 15.5 bar)
Outlet Pressure	1500 psig (103 bar)	2,500 psig (172 bar)	225 psig(15.5 bar)
Seal Material	FKM	FKM	FKM
Temperature, °F (°C)	Maximum Set Pressure, psig (bar)		
10 (-12)	-	-	225 (15.5)
25 (-4)	6,000 (413)	1,500 (103)	
30 (-1)			
50 (10)			
150 (65)	5,580 (384)		
200 (93)	5,160 (355)		
250 (121)	4,910 (338)		
275 (135)	-		
300 (148)			-

SET PRESSURE RATING

No.	Spring Color	Set Pressure		
		psig	bar	Mpa
A	Blue	50 to 350	3.4 to 24.1	0.34 to 2.41
B	Yellow	350 to 750	24.1 to 51.7	2.41 to 5.17
C	Purple	750 to 1500	51.7 to 103	5.17 to 10.3
D	Orange	1,500 to 2250	103 to 155	10.3 to 15.5
E	Brown	2,250 to 3000	155 to 206	15.5 to 20.6
F	White	3,000 to 4000	206 to 275	20.6 to 27.5
G	Red	4,000 to 5000	275 to 344	27.5 to 34.4
H	Green	5,000 to 6000	340 to 413	34.4 to 41.3

SET PRESSURE AND RESEALING PRESSURE

- Set pressure is the upstream pressure at which the first indication of flow occurs.
  Set pressure of each valve after initial relief is repeatable within ± 5% at room temperature.
- Resealing pressure is the upstream pressure at which there is no indication of flow. Resealing pressure is always lower
  Resealing pressure is always lower than set pressure.

TESTING

- Every valve is factory tested for set and reseal performance.

CLEANING AND PACKAGING

- Every valve is cleaned and packaged in accordance with the standard specification of cleaning and packaging.

MATERIALS OF CONSTRUCTION

RVL SERIES (LOW-PRESSURE VALVES)

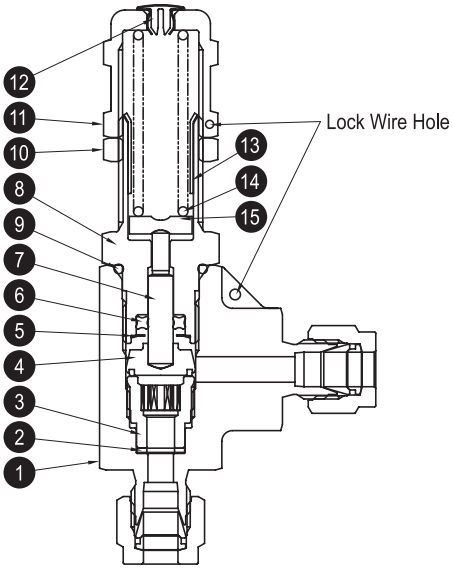

No.	Material Grade / ASTM Specification			No.	Material Grade / ASTM Specification	
	Description	Material			Description	Material
1	Body	316 SS / A182		8	Bonnet	316 SS / A479
2	Gasket	316 SS / A240		9	O-ring	FKM
3	Seat	316 SS / A479		10	Lock Nut	316 SS / A276
4	Disc Ass'y	316 SS / A479 + FKM		11	Cap	316 SS / A479
5	Retainer	RVL1 Series	304 SS / A666	12	Plug	Nylon6
		RVL2 Series	316 SS / A479	13	Sleeve	304 SS / A240
6	X-ring	FKM		14	Spring	S17700SS / AMS 5678
7	Stem	316 SS / A479		15	Spring Support	316 SS / A276

RVH SERIES (HIGH-PRESSURE VALVES)

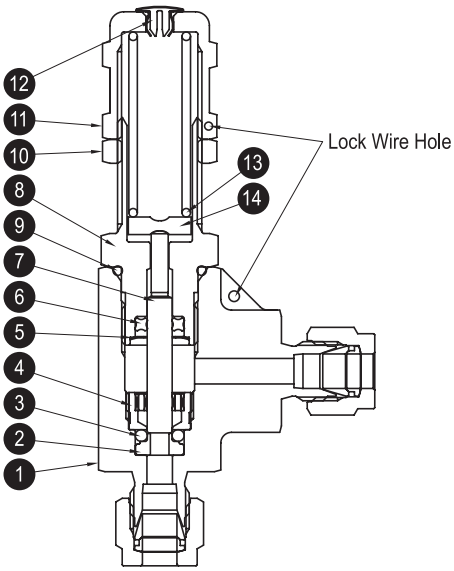

No.	Material Grade / ASTM Specification			No.	Material Grade / ASTM Specification	
	Description	Material			Description	Material
1	Body	316 SS / A182		8	Bonnet	316 SS / A479
2	Insert	316 SS / A479		9	O-ring	FKM
3	O-ring	FKM		10	Lock Nut	316 SS / A276
4	Seat Retainer	316 SS / A479		11	Cap	316 SS / A479
5	Retainer	RVH1 Series	304 SS / A666	12	Plug	Nylon6
		RVH2 Series	316 SS / A479	13	Spring	S17700SS / AMS 5678
6	X-ring	FKM		14	Spring Support	316 SS / A276
7	Stem	316 SS / A479				

DIMENSIONS

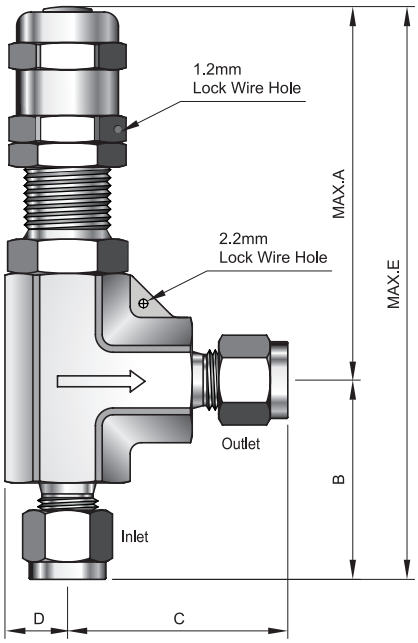

RVL SERIES (LOW-PRESSURE VALVES)

Ordering Number			Orifice in. (mm)	End Connections		Dimensions in. (mm)				
Series	Part No.			Inlet	Outlet	A	B	C	D	E
RVL1	4SW		0.189 (4.8)	1/4" LoK		2.70 (68.6)	1.44 (36.6)	1.60 (40.6)	0.43 (10.9)	4.14 (105)
	6MSW			6mm Lok						
	8MSW			8mm Lok						
	4NM	4SW		1/4" Male NPT	1/4" Lok		1.19 (30.2)			3.89 (98.8)
	4NM	4NF		1/4" Male NPT	1/4" Female NPT			1.17 (29.7)		
	4PTM	4PTF		1/4" Male ISO① Tapered	1/4" Female ISO① Tapered					
RVL2	8SW		0.252 (6.4)	1/2" Lok		4.09 (104)	1.83 (46.5)	1.83 (46.5)	0.50 (12.7)	5.92 (150)
	12MSW			12mm Lok						
	8NM	8SW		1/2" Male NPT	1/2" Lok		1.43 (36.3)			5.52 (150)
	8NM	8NF		1/2" Male NPT	1/2" Female NPT			1.43(36.3)		

① Refer to specifications ISO 7/1, BS EN 10226-1, DIN-2999, and JIS B0203.

RVH SERIES (HIGH-PRESSURE VALVES)

Ordering Number			Orifice in. (mm)	End Connections		Dimensions in. (mm)				
Series	Part No.			Inlet	Outlet	A	B	C	D	E
RVH1	4SW		0.142 (3.6)	1/4" LoK		2.70 (68.6)	1.44 (36.6)	1.60 (40.6)	0.43 (10.9)	4.14 (105)
	6MSW			6mm Lok						
	8MSW			8mm Lok						
	4NM	4SW		1/4" Male NPT	1/4" Lok		1.19 (30.2)			3.89 (98.8)
	4NM	4NF		1/4" Male NPT	1/4" Female NPT			1.17 (29.7)		
	4PTM	4PTF		1/4" Male ISO①Tapered	1/4" Female ISO①Tapered					
RVH2	8SW		0.252 (6.4)	1/2" Lok		4.09 (104)	1.83 (46.5)	1.83 (46.5)	0.50 (12.7)	5.92 (150)
	12MSW			12mm Lok						
	8NM	8SW		1/2" Male NPT	1/2" Lok		1.43 (36.3)			5.52 (150)
	8NM	8NF		1/2" Male NPT	1/2" Female NPT			1.43(36.3)		

① Refer to specifications ISO 7/1, BS EN 10226-1, DIN-2999, and JIS B0203.

Integral-Bonnet Needle Valves

TINV SERIES

- Maximum Working Pressure : 5,000 psig (344 bar) @ 100˚F (37˚C)
- Working Temperature Range : -65˚F(-54˚C) to 600˚F (315˚C)

TK-FUJIKIN CORPORATION
Fujikin Carp Group

ORDERING INFORMATION

SS	—	TINV1	A	—	4SW	—	S	—	PK	—	R
1		2	3		4		5		6		7

1. BODY MATERIAL

Material	Designator
316 SS	SS

2. VALVE SERIES

* Orifice Size	Designator
2.0mm	TINV1
4.4mm	TINV2
6.4mm	TINV3
9.5mm	TINV4

* The Orifice Size is determined using valves with TKF tube fitting end connections.
* For more details, See the Dimensions Table.

3. BODY PATTERN

Body Pattern	Designator
2-Way Straight (Standard)	Blank
2-Way Angle	A

4. INLET/OUTLET CONNECTION SIZE & TYPE

Inlet/Outlet Connection Size	Designator
1/8"	2
1/4"	4
3/8"	6
1/2"	8
3/4"	12
3mm	3M
6mm	6M
8mm	8M
10mm	10M
12mm	12M

Inlet/Outlet Connection Type	Designator
Lok	SW
Male NPT	NM
Female NPT	NF
Male ISO① Tapered	PTM
Female ISO① Tapered	PTF

① Refer to specifications ISO 7/1, BS EN 1022 6-1, DIN-2999, and JIS B0203.

5. HANDLE TYPE

Handle Type	Designator
Anodized Black Aluminum Bar Handle (Standard)	Blank
Black Phenolic Round Handle	BKR
316 Stainless Steel Bar Handle	S

6. PACKING MATERIAL

Packing Material	Designator
PTFE (Standard)	Blank
PFA	PF
PEEK	PK
UHMWPE	UH

7. STEM TYPE

Stem Type	Designator
Vee Stem (Standard)	Blank
Regulating Stem	R
Soft-Seat Stem + PCTFE	SPC

FEATURES

- Panel mountable
- Metal seat or soft seat
- Variety of end connection
- Straight or Angle pattern

TECHNICAL DATA

TEMPERATURE - WORKING PRESSURE RATING

Material	316 SS
Temperature Rating, ºF (ºC)	Working pressure, psig (bar)
-65 (-53) to -20 (-28)	5000 (344)
-20 (-28) to 100 (37)	5000 (344)
200 (93)	4,295 (295)
250 (121)	4,085 (281)
300 (148)	3,875 (266)
350 (176)	3,715 (255)
400 (204)	3,560 (245)
450 (232)	3,435 (236)
500 (260)	3,310 (228)
600 (315)	3,130 (215)

TEMPERATURE - PRESSURE RATING ACCORDING TO PACKING MATERIALS

Packing Material	Temperature Rating, ºF (ºC)	pressure Rating @ Max. Temperature
PTFE	-65 ~ 450 (-53 ~ 232)	3,435psig (236bar)
UHMWPE	-65 ~ 250 (-53 ~ 121)	4,085psig (281bar)
PEEK	-65 ~ 600 (-53 ~ 315)	3,130psig (215bar)
PFA	-65 ~ 450 (-53 ~ 232)	3,435psig (236bar)

FLOW DATA AT 100˚F (37˚C)

TINV1, TINV2, TINV3 Series

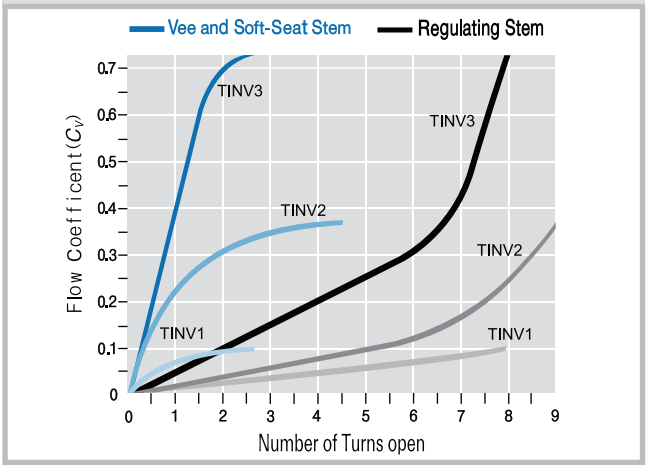

TINV4 Series

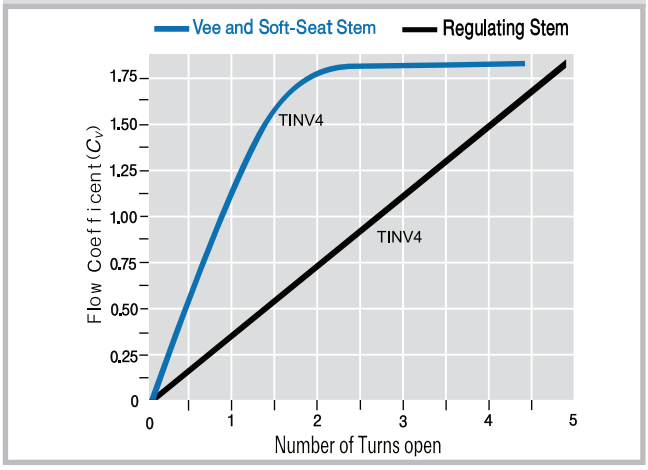

- For leakage, Each valve is tested with nitrogen at 1000psig (69bar)
  The leakage shall not exceed 0.1 std cc/min (Max. 0.1 std cc/min)

CLEANING AND PACKAGING

- Every valve is cleaned and packaged in accordance with the standard specification of cleaning and packaging.

MATERIALS OF CONSTRUCTION

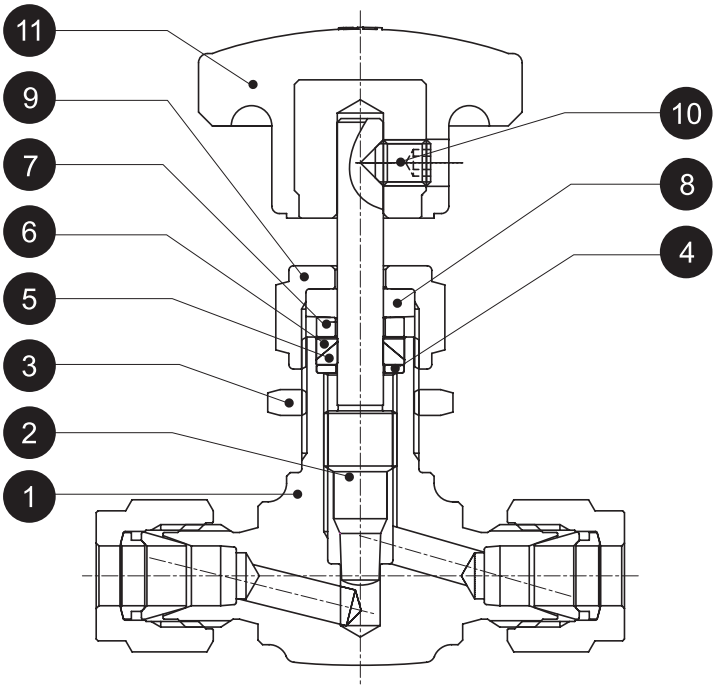

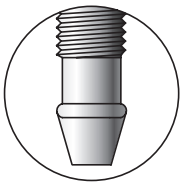

Vee Stem

Regulating Stem

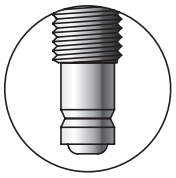

Soft-Seat Stem

No.	Description		Material Material Grade / ASTM Specification
1	Body		316 SS / A182
2	STEM	Vee Tip	316 SS / A276
		Regulating Tip	
		Soft-Seat Tip	
3	Panel Nut		316 SS
4	Lower Gland		316 SS
5	Lower Packing		PTFE
6	Upper Packing		PTFE
7	Packing Gland		316 SS
8	Gland		304 SS
9	Packing Nut		316 SS / A276
10	Set Screw		316 SS
11	Handle		Phenolic with brass insert

DIMENSIONS

Straight Pattern

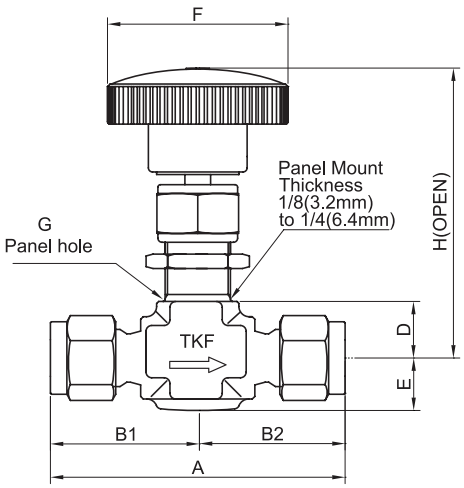

Angle Pattern

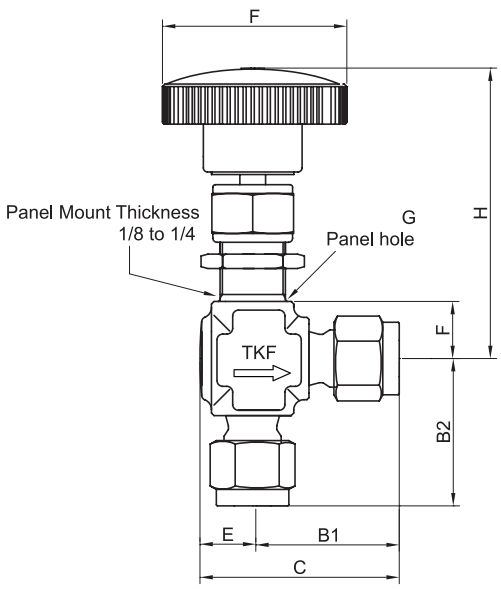

Ordering Number		Orifice in. (mm)	Cv	End Connections		Dimensions in. (mm)								
Series	Part No.			Inlet	Outlet	A	B1	B2	C	D	E	F	G	H
TINV1	2SW	0.079 (2.0)	0.09	1/8″ Lok		1.94(49.3)	0.98 (24.9)		1.29 (32.8)	0.44 (11.2)	0.31 (7.9)	1.0 (25.4)	0.47(11.9)	2.28 (57.9)
	3MSW			3mm Lok		2.27(57.6)							0.48(12.2)	
	2NF			1/8″ Female NPT		1.88(47.8)	0.94(23.9)		1.25(31.8)				0.47 (11.9)	
	2NM			1/8″ Male NPT		1.50(38.1)	0.75(19.1)		1.06(26.9)					
	2NM	2SW		1/8″ Male NPT	1/8″ Lok	1.73(43.9)	0.98(24.9)	0.75(19.1)	1.29(32.8)					
TINV2	4SW	0.173 (4.4)	0.37	1/4″ Lok		2.27 (57.6)	1.13 (28.7)		1.51 (38.4)		0.38 (9.7)	1.38 (35.1)	0.53 (13.5)	2.5 (63.5)
	6MSW			6mm Lok										
	8MSW			8mm Lok		2.34(59.4)	1.17(29.7)		1.54(39.1)					
	2NF			1/8″ Female NPT		1.62 (41.1)	0.81 (20.6)		1.19(30.2)					
	2NM			1/8″ Male NPT					1.19(30.2)					
	4NM			1/4″ Male NPT		1.97(50.0)	0.98(24.9)		1.36(34.5)					
	4NM	4SW		1/4″ Male NPT	1/4″ Lok	1.95(49.5)	1.13(28.7)	0.98(24.9)	1.51(38.4)					
TINV3	6SW	0.252 (6.4)	0.73	3/8″ Lok		2.58(65.5)	1.29(32.8)		1.79 (45.5)	0.55 (14.0)	0.50 (12.7)	1.88 (47.8)	0.78 (19.8)	2.97 (75.4)
	8SW			1/2″ Lok		2.80(71.1)	1.40(35.6)							
	10MSW			10mm Lok		2.60(66.0)	1.30(33.0)		1.80(45.7)					
	12MSW			12mm Lok		2.80(71.1)	1.40(35.6)		1.90(48.3)					
	4NF			1/4″ Female NPT		2.12(53.8)	1.06(26.9)		1.56(39.6)					
	6NM			3/8″ Male NPT		2.25(62.5)	1.12(28.4)		1.62(41.1)					
	4NM	6SW		1/4″ Male NPT	3/8″ Lok	2.42 (61.5)	1.29 (32.8)	1.12 (28.4)	1.79 (45.5)					
	6NM	6SW		3/8″ Male NPT	3/8″ Lok									
	6NM	8SW		3/8″ Male NPT	1/2″ Lok	2.52(64.0)	1.40(35.6)		1.90(48.3)					
	4NM	4NF		1/4″ Male NPT	1/4″ Female NPT	2.18(55.3)	1.06 (26.9)		1.56 (39.6)					
	4PTF			1/4″ Female ISO① Tapered		2.12(53.8)		1.06(26.9)						
TINV4	8SW	0.374 (9.5)	1.8	1/2″ Lok		3.80 (96.5)	1.90(48.3)		2.65 (67.3)	0.75 (19.1)		3.0 (76.2)	1.03 (26.2)	3.91 (99.3)
	12SW			3/4″ Lok										
	12MSW			12mm Lok										
	18MSW			18mm Lok										
	6NF			3/8″ Female NPT		3.0 (76.2)	1.50(38.1)		2.25 (57.2)					3.88 (98.6)
	8NF			1/2″ Female NPT										
	8NM			1/2″ Male NPT										
	8NM	8NF		1/2″ Male NPT	1/2″ Female NPT									
	6PTF			3/8″ Female ISO① Tapered										
	8PTF			1/2″ Female ISO① Tapered										

Union-Bonnet Needle Valves

TUNV / THUNV SERIES

- Maximum Working Pressure
  TUNV SERIES : 6,000 psig (413 bar) @ 100˚F (37˚C)
  THUNV SERIES : 10,000psig (689bar) @ 100˚F (37˚C)
- Working Temperature Range : -65˚F(-54˚C) to 1,200˚F(648˚C)

TK-FUJIKIN CORPORATION
Fujikin Carp Group

ORDERING INFORMATION

SS	—	TUNV1	A	—	4SW	—	S	—	PK	—	R
1		2	3		4		5		6		7

1. BODY MATERIAL

Material	Designator
316 SS	SS

2. VALVE SERIES

*

Orifice Size	Designator
4.0mm	TUNV1
	THUNV1
6.4mm	TUNV2
	THUNV2
11.0mm	TUNV3

* The Orifice Size is determined using valves with TKF tube fitting end connections.
* For more details, See the Dimensions Table.

3. BODY PATTERN

Body Pattern	Designator
2-Way Straight (Standard)	Blank
2-Way Angle	A

4. INLET/OUTLET CONNECTION SIZE & TYPE

Inlet/Outlet Connection Size	Designator
1/8″	2
1/4″	4
3/8″	6
1/2″	8
3/4″	12
1″	16
6mm	6M
8mm	8M
10mm	10M
12mm	12M

Inlet/Outlet Connection Type	Designator
Lok	SW
Male NPT	NM
Female NPT	NF
Male ISO① Tapered	PTM
Female ISO① Tapered	PTF
Tube Socket Butt Weld	BW
Pipe Socket Butt Weld	PBW
MFS Male	VM

① Refer to specifications ISO 7/1, BS EN 1022 6-1, DIN-2999, and JIS B0203.

5. HANDLE TYPE

Handle Type	Designator
Anodized Black Aluminum Bar Handle (Standard)	Blank
316 Stainless Steel Bar Handle	S

6. PACKING MATERIAL

Packing Material	Designator
PTFE (Standard)	Blank
PEEK	PK
Grafoil	G

7. STEM TYPE

Stem Type	Designator
Vee Stem (Standard)	Blank
Regulating Stem	R
Non-Rotating Ball Stem	B
Soft-Seat Stem + PCTFE	SPC
Soft-Seat Stem + PTFE	SPT

UNION BONNET NEEDLE VALVES |

FEATURES

■ Panel mountable ■ Non-rotating stem tip ■ Variety of stem tips ■ Variety of end connection ■ Straight or Angle pattern

TECHNICAL DATA

TEMPERATURE - WORKING PRESSURE

Material	TUNV Series	THUNV Series
	316 SS	316 SS
Temperature Rating, ºF (ºC)	Working Pressure, psig (bar)	
-65 (-53) to 100 (37)	6,000 (413)	10,000 (689)
200 (93)	5,160 (355)	9,290 (640)
250 (121)	4,910 (338)	8,840 (609)
300 (148)	4,660 (321)	8,390 (578)
350 (176)	4,470 (307)	8,045 (554)
400 (204)	4,280 (294)	7,705 (530)
450 (232)	4,130 (284)	7,435 (512)
500 (260)	3,980 (274)	7,165 (493)
600 (315)	3,960 (259)	6,770 (466)
650 (343)	3,700 (254)	6,660 (458)
700 (371)	3,600 (248)	6,480 (446)
750 (398)	3,520 (242)	6,335 (436)
800 (426)	3,460 (238)	6,230 (429)
850 (454)	3,380 (232)	6,085 (419)
900 (482)	3,280 (225)	5,905 (406)
950 (510)	3,220 (221)	5,795 (399)
1,000 (537)	3,030 (208)	5,450 (375)
1,050 (565)	3,000 (206)	5,400 (372)
1,100 (593)	2,685 (184)	4,835 (333)
1,150 (621)	2,285 (157)	4,115 (283)
1,200 (648)	1,715 (118)	3,085 (212)

TEMPERATURE - PRESSURE RATING ACCORDING TO PACKING MATERIALS

Packing Material	Temperature Rating, ºF (ºC)	Pressure Rating@Max. Temperature	
		TUNV Series	THUNV Series
PTFE	-65 ~ 450 (-53 ~ 232)	5,710psig (393bar)	7,435psig (512bar)
PEEK	-65 ~ 600 (-53 ~ 315)	5,040psig (347bar)	6,770psig (466bar)
Grafoil	-65 ~ 1,200 (-53 ~ 648)	1,715psig (118bar)	3,085psig (212bar)

FLOW DATA AT 70°F (20°C)

FLOW COEFFICIENT AT TURNS OPEN

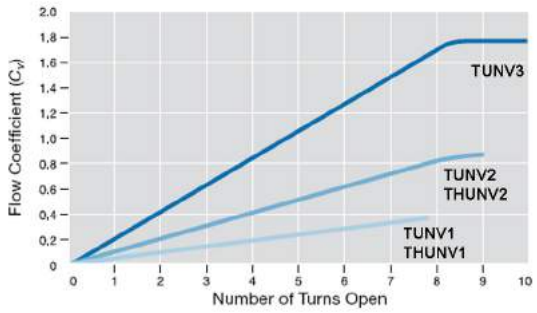

TESTING

■ For leakage, Each valve is tested with nitrogen at 1,000psig (69bar) The leakage shall not exceed 0.1 std cc/min (Max. 0.1 std cc/min)

CLEANING AND PACKAGING

■ Every valve is cleaned and packaged in accordance with the standard specification of cleaning and packaging.
■ Non-Rotating Ball Stem Tip
■ The Non-Rotating Ball Stem is designed to be used in a fully closed position.

MATERIAL OF CONSTRUCTION

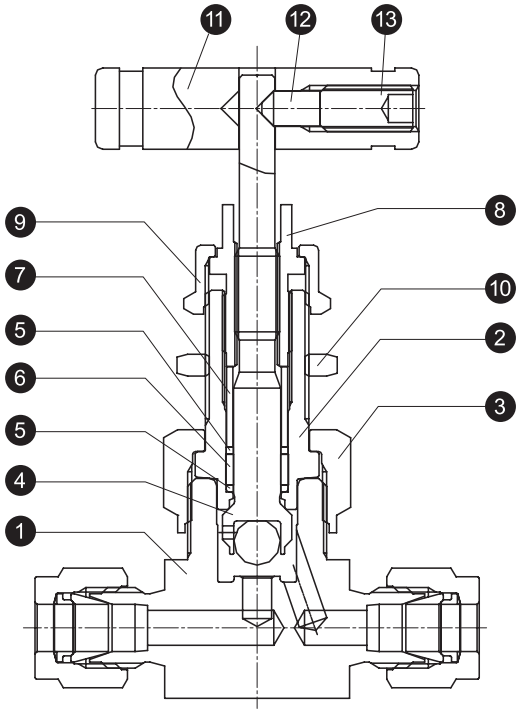

TUNV SERIES

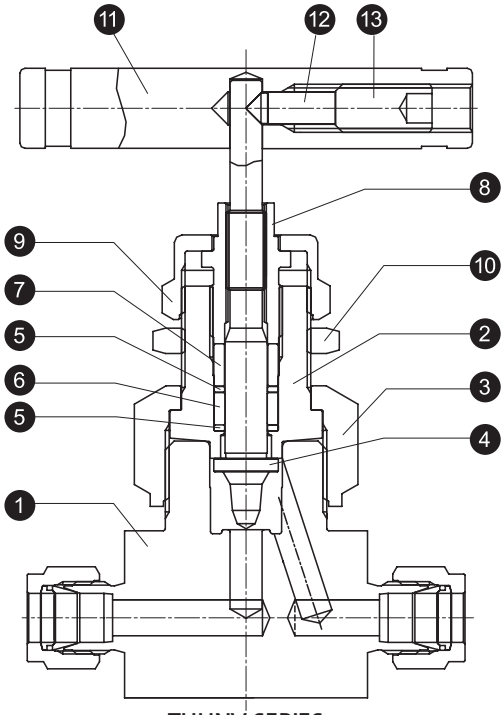

THUNV SERIES

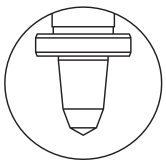

Vee Stem

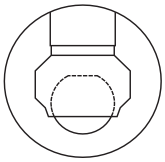

Non-Rotating Ball Stem

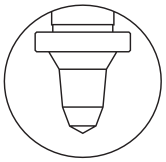

Regulating Stem

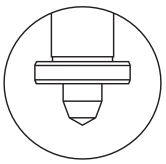

Soft-Seat Stem

No.	Description		Material Material Grade / ASTM Specification
1	Body		316 SS / A479
2	Bonnet		316 SS / A479
	Bonnet Nut		316 SS / A276
	Stem	Vee Tip	316 SS / A276
3		Non-Rotating Ball Tip	
4		Soft Tip	
		Regulating Tip	
5	Packing Support		PTFE (C:15%)
6	Packing		PTFE
7	Gland		316 SS / A276
8	Packing Bolt		316 SS / A276
9	Lok Nut		316 SS / A276
10	Panel Nut		304 SS
11	Handle		A6061B
12	Pin		316 SS / A276
13	Set Screw		304 SS

UNION BONNET NEEDLE VALVES |

DIMENSIONS

TUNV SERIES

Straight Pattern

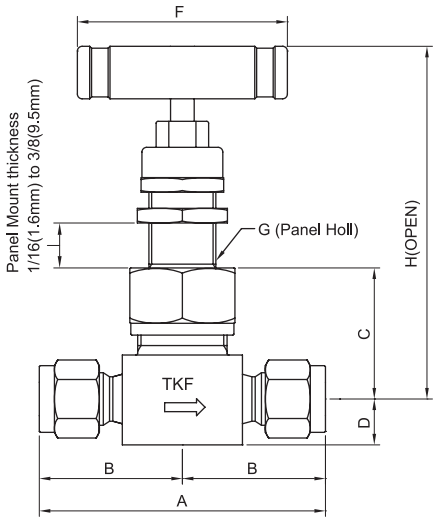

Angle Pattern

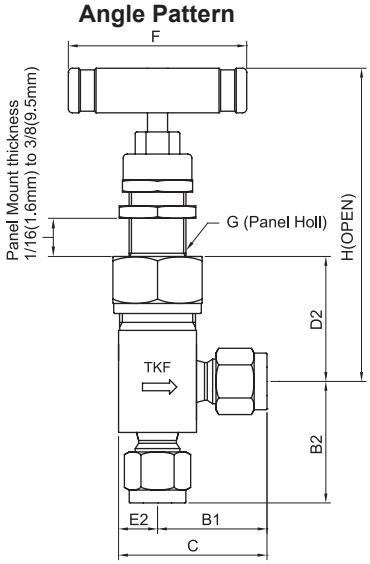

Socket weld
end connection

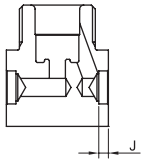

Order Number		Orifice in. (mm)	Cv	End Connections		Dimensions in. (mm)													
Series	Part No.			Inlet	Outlet	A	B	B1	B2	C	D1	D2	E1	E2	F	G	H (Straight)	H (Angle)	J
TUNV1	2NF	0.157 (4.0)	0.4	1/8" Female NPT		2.0 (50.8)	1.0 (25.4)	0.89 (22.6)	1.0 (25.4)	1.27 (32.3)	1.09 (27.7)	1.28 (32.5)	0.38 (9.7)	0.38 (9.7)	1.75 (44.4)	0.59 (15.1)	3.04 (77.2)	3.23 (82.0)	-
	4NF			1/4" Female NPT		2.06 (52.3)	1.03 (26.2)						0.39 (9.9)						
	4NM			1/4" Male NPT		2.0 (50.8)	1.00 (25.4)	1.0 (25.4)		1.38 (35.1)		1.09 (27.7)	0.38 (9.7)					3.04 (77.2)	
	4NM	4NF		1/4" Male NPT	1/4" Female NPT	2.03 (51.6)	1.03 (26.2)	0.89 (22.6)		1.27 (32.3)		1.28 (32.5)	0.39 (9.9)					3.23 (82.0)	
	4SW			1/4" Lok		2.40 (61.0)	1.20 (30.5)	1.16 (29.5)	1.48 (37.6)	1.54 (39.1)		1.09 (27.7)	0.38 (9.7)					3.04 (77.2)	
	6MSW			6mm Lok															
	8MSW			8mm Lok				-	-	-		-		-				-	
	4BW			1/4" Tube Soket Butt Weld		1.82 (46.2)	0.91 (23.1)	0.88 (22.4)	1.19 (30.2)	1.25 (31.8)		1.09 (27.7)		0.38 (9.7)				3.04 (77.2)	0.28 (7.1)
	4VM			1/4" MFS Male		2.06 (52.3)	1.03 (26.2)	-	-	-		-		-				-	-
TUNV2	4NF	0.252 (6.4)	0.86	1/4" Female NPT		2.25 (57.2)	1.12 (28.4)	1.0 (25.4)	1.12 (28.4)	1.50 (38.1)	1.34 (34.0)	1.47 (37.3)	0.50 (12.7)	0.50 (12.7)	2.50 (63.5)	0.78 (19.8)	3.70 (94.0)	3.82 (97.0)	-
	6NF			3/8" Female NPT															
	6SW			3/8" Lok		2.83 (71.9)	1.41 (35.8)	1.29 (32.8)	1.66 (42.2)	1.79 (45.5)		1.22 (31.0)						3.57 (90.7)	
	8SW			1/2" Lok		3.04 (77.2)	1.52 (38.6)	1.40 (35.6)	1.65 (41.9)	1.90 (48.3)		1.34 (34.0)						3.70 (94.0)	
	10MSW			10mm Lok		2.85 (72.4)	1.42 (36.1)	1.30 (33.0)	1.55 (39.4)	1.80 (45.7)		1.35 (34.3)					3.69 (93.7)	3.71 (94.2)	
	12MSW			12mm Lok		3.04 (77.2)	1.52 (38.6)	1.40 (35.6)	1.65 (41.9)	1.90 (48.3)		1.34 (34.0)					3.70 (94.0)	3.70 (94.0)	
	6BW			3/8" Tube Socket Butt Weld		2.25 (57.2)	1.12 (28.4)	1.0 (25.4)	1.25 (31.8)	1.50 (38.1)									0.31 (7.9)
	8BW			1/2" Tube Socket Butt Weld					1.00 (25.4)			1.40 (35.6)						3.76 (95.5)	0.38 (9.7)
	4BW			1/4" Pipe Socket Butt Weld					1.12 (28.4)			1.47 (37.3)						3.82 (97.0)	
	8VM			1/2" MFS Male		3.12 (79.2)	1.56 (39.6)	-	-	-	1.53 (38.9)	-	0.62 (15.7)	-			3.88 (98.6)	-	-
TUNV3	8NF	0.433 (11.0)	2.4	1/2" Female NPT		3.12 (79.2)	1.56 (39.6)	1.31 (33.3)	1.56 (39.6)	2.00 (50.8)	1.82 (46.2)	2.00 (50.8)	0.62 (15.7)	0.69 (17.5)	3.50 (88.9)	1.03 (26.2)	4.78 (121)	4.97 (126)	-
	12NF			3/4" Female NPT		3.25 (82.6)	1.62 (41.1)	-	-	-	1.91 (48.5)	-	0.78 (19.8)	-			4.88 (124)	-	
	16NF			1" Female NPT		3.62 (91.9)	1.81 (46.0)				2.13 (54.1)		1.00 (25.4)				5.10 (129)		
	8NM	8NF	1.9	1/2" Male NPT	1/2" Female NPT	3.12 (79.2)	1.56 (39.6)	1.31 (33.3)	1.56 (39.6)	2.37 (60.2)	1.82 (46.2)	2.0 (50.8)	0.62 (15.7)	0.69 (17.5)			4.78 (121)	4.97 (126)	
	12NM	12NF		3/4" Male NPT	3/4" Female NPT	3.25 (82.6)	1.62 (41.1)	-	-	-	1.91 (48.5)	-	0.78 (19.8)	-			4.88 (124)	-	
	16NM	16NF		1" Male NPT	1" Female NPT	3.62 (91.9)	1.81 (46.0)				2.13 (54.1)		1.00 (25.4)				5.10 (129)		
	8SW		2.1	1/2" Lok		3.92 (99.6)	1.96 (49.8)	1.68 (42.7)	2.08 (52.8)	2.37 (60.2)	1.82 (46.2)	1.88 (47.8)	0.62 (15.7)	0.69 (17.5)			4.78 (121)	4.85 (123)	
	12SW		2.4	3/4" Lok															
	16SW			1" Lok		4.09 (104)	2.04 (51.8)	-	-	-	1.88 (47.8)	-	0.69 (17.5)	-					
	12MSW		1.9	12mm Lok		3.92 (99.6)	1.96 (49.8)	1.68 (42.7)	2.08 (52.8)	2.37 (60.2)	1.82 (46.2)	1.88 (47.8)	0.62 (15.7)	0.69 (17.5)					
	8BW		2.2	1/ 2" Tube Socket Butt Weld		3.12 (79.2)	1.56 (39.6)	1.31 (33.3)	1.69 (42.9)	2.00 (50.8)									0.38 (9.7)
	12BW			3/4" Tube Socket Butt Weld				-	-	-		-		-				-	0.44 (11.2)
	8PBW		2.4	1/2" Pipe Socket Butt Weld				1.31 (33.3)	1.56 (39.6)	2.00 (50.8)	1.88 (47.8)	2.00 (50.8)	0.69 (17.5)	0.69 (17.5)			4.85 (123)	4.97 (126)	0.38 (9.7)
	8VM		1.9	1/2" MFS Male				-	-	-	1.82 (46.2)	-	0.62 (15.7)	-			4.78 (121)	-	-

2. THUNV SERIES

Straight Pattern

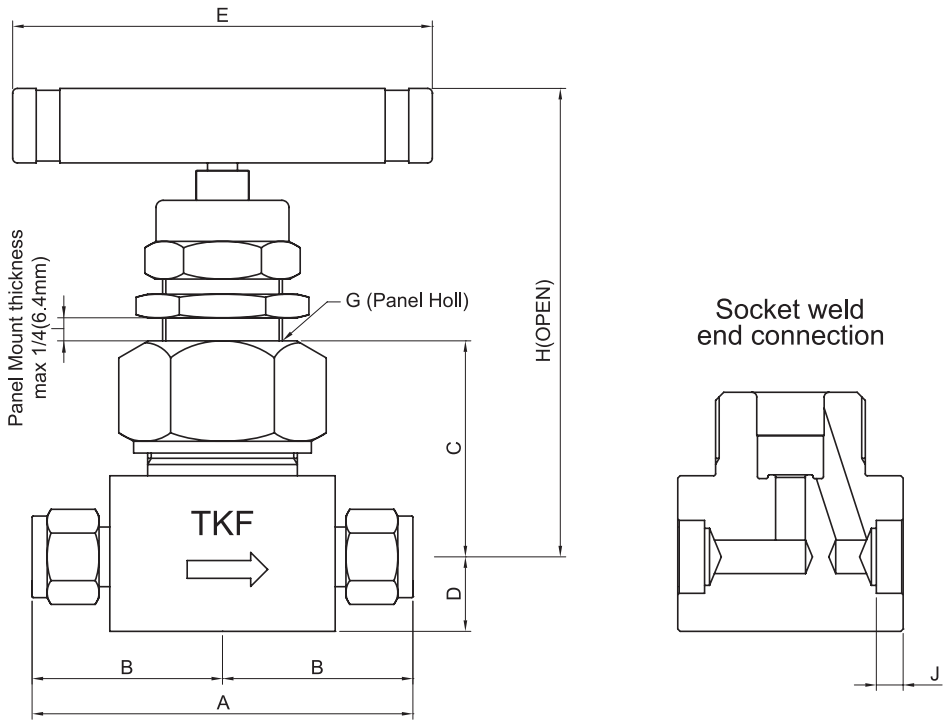

Order Number		Orifice in. (mm)	Cv	End Connection		Dimensions in. (mm)							
Series	Part No.			Inlet	Outlet	A	B	C	D	E	F	H	J
THUNV1	2NF	0.157 (4.0)	0.4	1/8" Female NPT		2.25 (57.2)	1.13 (28.7)	1.38 (35.1)	0.50 (12.7)	2.50 (63.5)	0.81 (20.6)	3.31 (84.1)	-
	4NF			1/4" Female NPT									
	4NM			1/4"Male NPT									
	4NM	4NF		1/4" Male NPT	1/4" Female NPT								
	4SW			1/4" Lok		2.82 (71.6)	1.41 (35.8)						
	4BW			1/4" Tube socket Butt weld		2.25 (57.2)	1.13 (28.7)						0.28 (7.1)
THUNV2	4NF	0.252 (6.4)	0.9	1/4" Female NPT		3.13 (79.5)	1.56 (39.6)	1.81 (46.0)	0.63 (16.0)	3.50 (88.9)	1.06 (26.9)	4.13 (105)	-
	8NF			1/2" Female NPT		3.25 (82.6)	1.63 (41.4)	1.94 (49.3)	0.78 (19.8)			4.25 (108)	
	8NM			1/2" Male NPT		3.13 (79.5)	1.56 (39.6)	1.81 (46.0)	0.63 (16.0)			4.13 (105)	
	8NM	8NF		1/2" Male NPT	1/2" Female NPT	3.25 (82.6)	1.63 (41.4)	1.94 (49.3)	0.78 (19.8)			4.25 (108)	

Manifold Valves

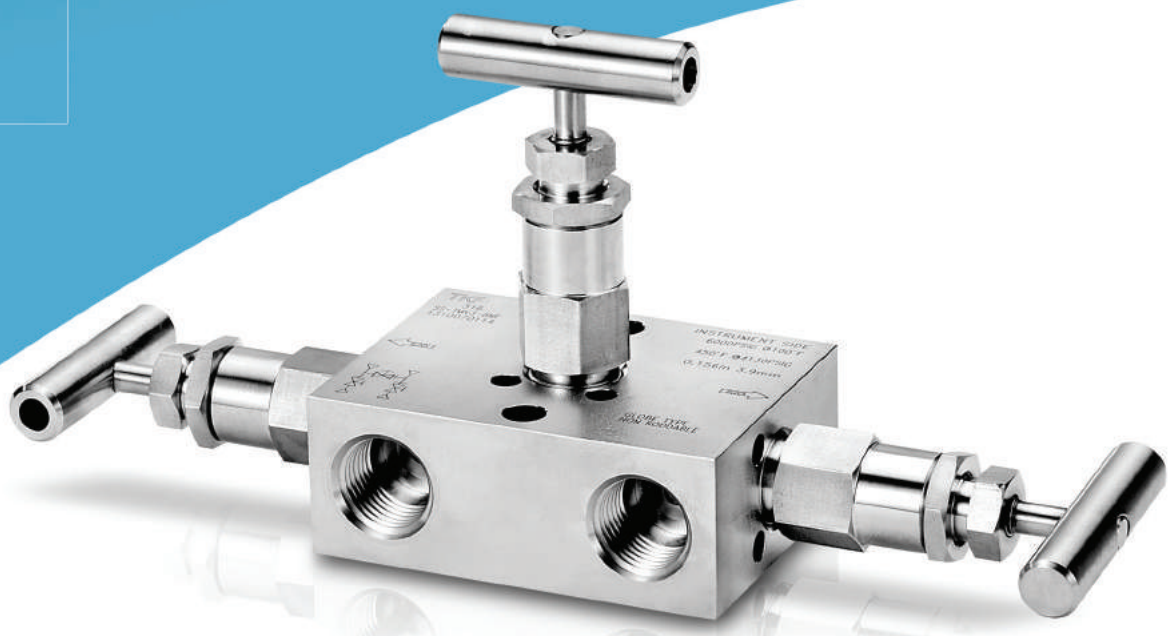

TMV SERIES

- Maximum Working Pressure : 6,000 psig (413 bar) @ 100˚F (37˚C)
- Working Temperature Range
  PTFE Packing : -65˚F (-53˚C) to 450˚F (232˚C)
  Grafoil Packing : -65˚F (-53˚C) to 1,200˚F (648˚C)

TK-FUJIKIN CORPORATION
Fujikin Carp Group

ORDERING INFORMATION

SS	—	TM2V	—	8NF	—	G	—	V
1		2		3		4		5

1. BODY MATERIAL

Material	Designator
316SS	SS

2. MANIFOLD VALVE SERIES

Type	Designator
2-Valves Block	TM2V
2-Valves Vertical	TM2VV
2-Valves Single Flange	TM2V1F
3-Valves Block	TM3V
3-Valves Vertical	TM3VV
3-Valves Single Flange	TM3V1F
5-Valves Block	TM5V
5-Valves Vertical	TM5VV
5-Valves Single Flange	TM5V1F

3. INLET/OUTLET CONNECTION SIZE & TYPE

Inlet/Outlet Connection Size	Designator
1/4"	4
1/2"	8

Inlet/Outlet Connection Type	Designator
Female NPT	NF
Female ISO①Tapered	PTF

① Refer to specifications ISO 7/1, BS EN 10226-1, DIN-2999, and JIS B0203.

4. PACKING MATERIAL

Packing Material	Designator
PTFE(Standard)	Blank
Grafoil	G

5. STEM TYPE

Stem Type	Designator
Ball Stem	Blank
Vee Stem	V

FEATURES

- 2, 3, 5-valves instrument manifolds.
- Flange design meets the requirements of MSS SP-99
- Available direct or remote mounting

TECHNICAL DATA

BONNET VALVE

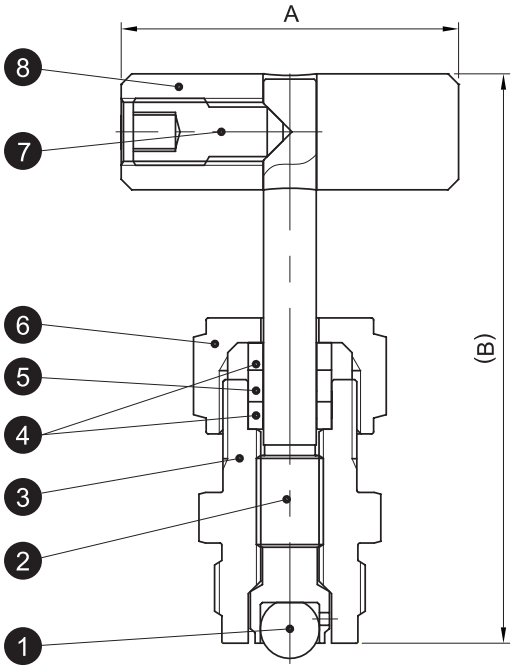

Small Bonnet Valve

MATERIALS OF CONSTRUCTION

No.	Description	Material Material Grade / ASTM Specification
1	BALL TIP	316 SS / A276
2	STEM	316 SS / A276
3	BONNET	316 SS / A479
4	GLAND	316 SS / A276
5	PACKING	PTFE
6	GLAND NUT	316 SS / A276
7	SET SCREW	304 SS
8	HANDLE	316 SS / A276

DIMENSIONS

Part Name	Dimensions in. (mm)	
	A	B
SMALL BONNET VALVE	1.26 (32)	2.11 (53.4)

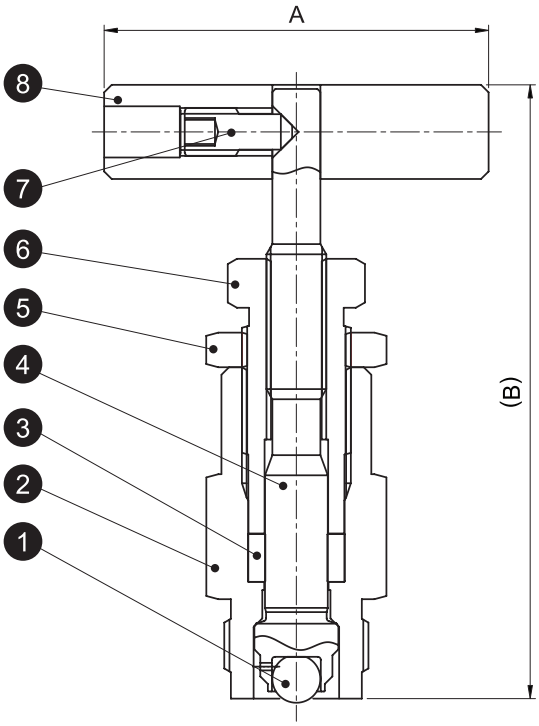

Large Bonnet Valve

MATERIALS OF CONSTRUCTION

No.	Description	Material Material Grade / ASTM Specification
1	BALL TIP	316 SS / A276
2	BONNET	316 SS / A479
3	PACKING	PTFE
4	STEM	316 SS / A276
5	JAM NUT	316 SS / A276
6	PACKING BOLT	316 SS / A276
7	SET SCREW	304 SS
8	HANDLE	316 SS / A276

DIMENSIONS

Part Name	Dimensions in. (mm)	
	A	B
LARGE BONNET VALVE	2 (50.8)	3.21 (81.7)

TEMPERATURE - WORKING PRESSURE RATING

Body Material	SS 316/A479	
Packing Material	PTFE	Grafoil
Temperature ˚F (˚C)	Working Pressure psig (bar)	
-65 (-53) to 100 (37)	6,000 (413)	6,000 (413)
200 (93)	5,160 (355)	5,160 (355)
250 (121)	4,910 (338)	4,910 (338)
300 (148)	4,660 (321)	4,660 (321)
350 (176)	4,470 (307)	4,470 (307)
400 (204)	4,280 (294)	4,280 (294)
450 (232)	4,130 (284)	4,130 (284)
500 (260)	-	3,980 (274)
550 (287)	-	3,870 (266)
600 (315)	-	3,760 (259)
650 (343)	-	3,700 (254)
700 (371)	-	3,600 (248)
750 (398)	-	3,520 (242),
800 (426)	-	3,460 (238)
850 (454)	-	3,380 (232)
900 (482)	-	3,280 (225)
950 (510)	-	3,220 (221)
1,000 (537)	-	3,030 (208)
1,050 (565)	-	3,000 (206)
1,100 (593)	-	2,685 (184)
1,150 (621)	-	2,285 (157)
1,200 (648)	-	1,715 (118)

* 450˚F (232˚C) with standard PTFE packing.
* 1,200˚F (648˚C) with optional Grafoil packing.

TESTING

■ For, leakage, Each valve is tested with nitrogen at 1,000psig (69bar)
The leakage shall not exceed 0.1 std cc/min (Max. 0.1 std cc/min)

CLEANING AND PACKAGING

■ Every valve is cleaned and packaged in accordance with the standard specification of cleaning and packaging.

2-VALVE MANIFOLD

REMOTE MOUNTING TYPE

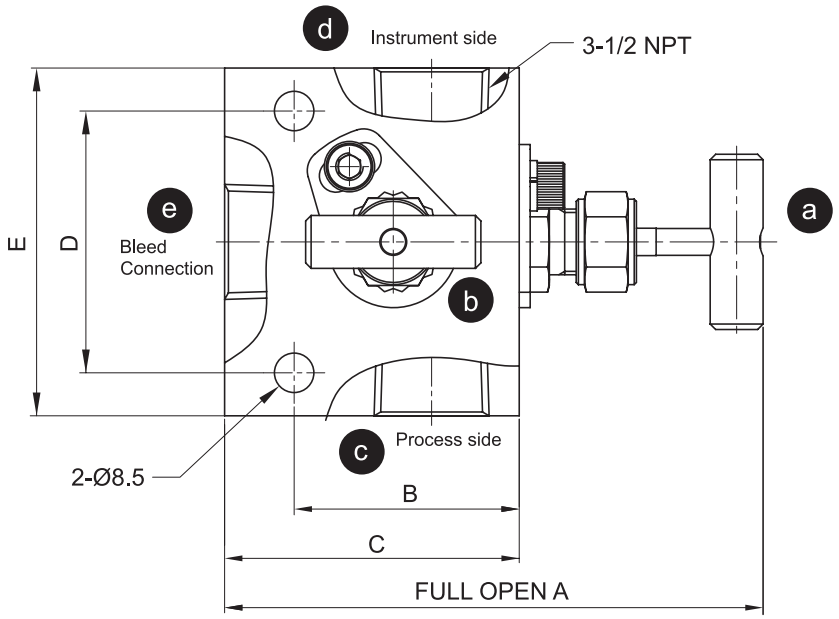

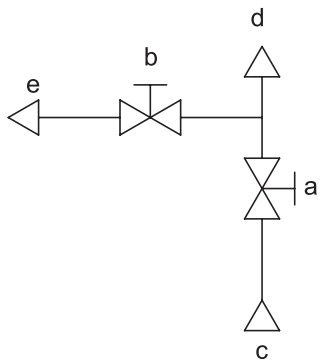

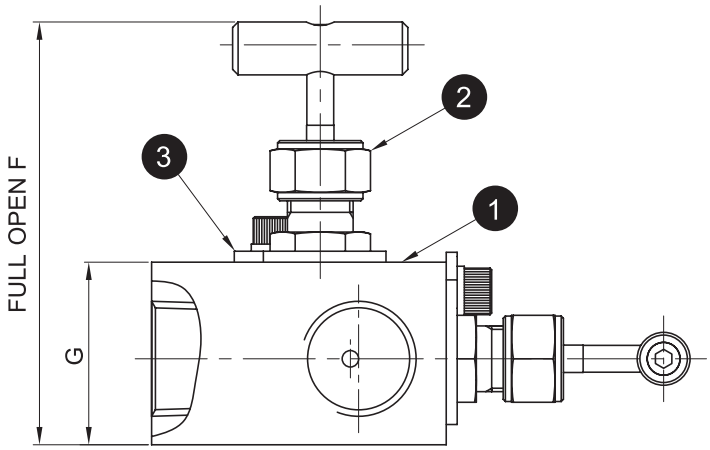

MATERIALS OF CONSTRUCTION

No.	Description	Material Material Grade / ASTM Specification
1	BODY	316 SS / A479
2	SMALL BONNET VALVE	See Technical Data
3	LOCK PLATE	304 SS

DIMENSIONS

Ordering Number No.	Orifice in. (mm)	End Connections			Dimensions in. (mm)						
		Process	Instrument	Bleed	A	B	C	D	E	F	G
SS-TM2V-8NF	0.126 (3.2)	1/2″ FEMALE NPT			3.76 (95.5)	1.62 (41.1)	2.0 (51)	1.88 (47.8)	2.5 (63.5)	3.03 (77)	1.31 (33.34)

DIRECT MOUNTING TYPE

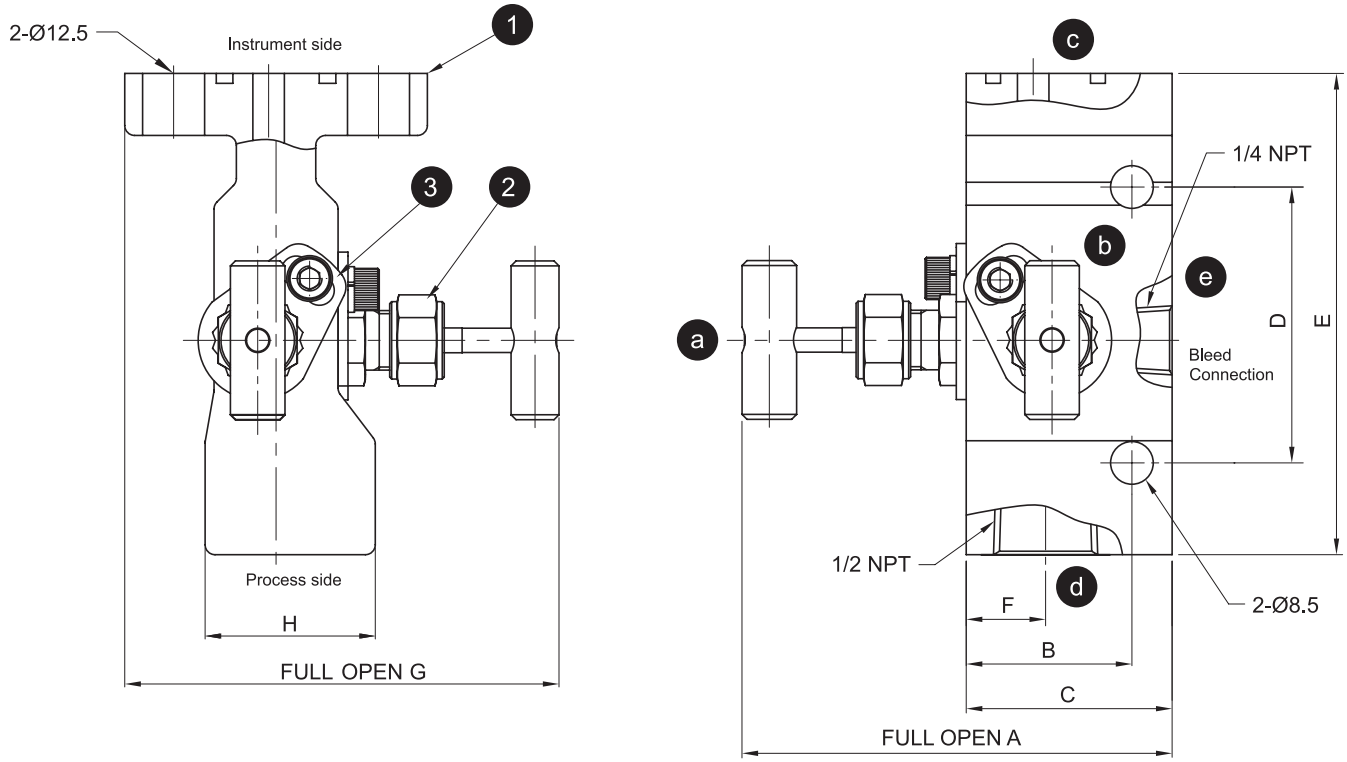

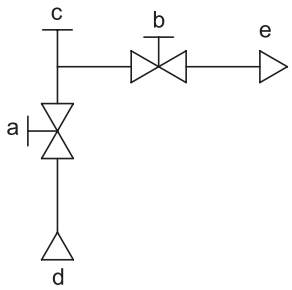

MATERIALS OF CONSTRUCTION

No.	Description	Material Material Grade / ASTM Specification
1	BODY	316 SS / A479
2	SMALL BONNET VALVE	See Technical Data
3	LOCK PLATE	304 SS

DIMENSIONS

Ordering Number No.	Orifice in. (mm)	End Connections			Dimensions in. (mm)							
		Process	Instrument	Bleed	A	B	C	D	E	F	G	H
SS-TM2V1F-8NF	0.126 (3.2)	1/2″ FEMALE NPT	FLANGE (MSS)	1/4” FEMALE NPT	3.38 (86)	1.31 (33.4)	1.63 (41.5)	1.882 (47.8)	3.76 (95.5)	0.63 (16)	3.5 (88.9)	1.33 (33.8)

3-VALVE MANIFOLD

REMOTE MOUNTING TYPE

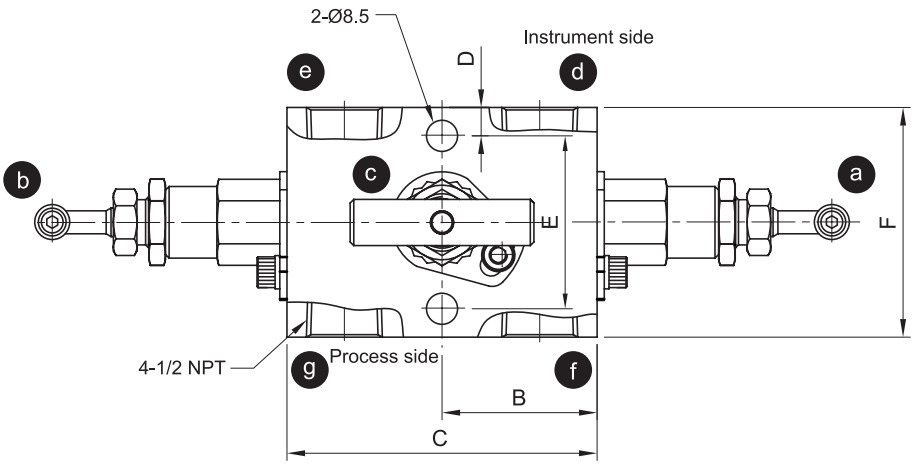

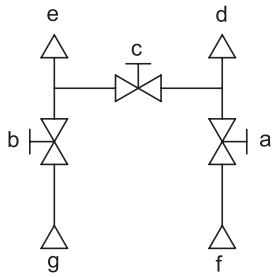

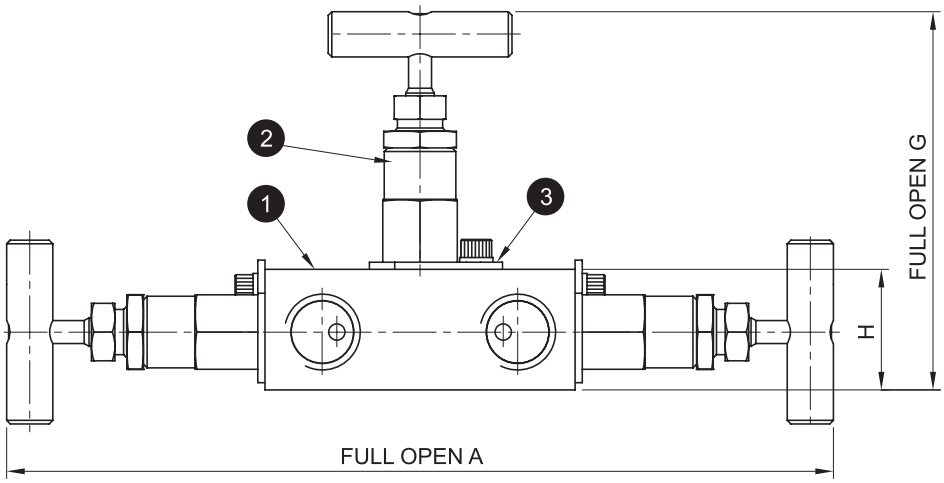

MATERIALS OF CONSTRUCTION

No.	Description	Material Material Grade / ASTM Specification
1	BODY	316 SS / A479
2	LARGE BONNET VALVE	See Technical Data
3	LOCK PLATE	304 SS

DIMENSIONS

Ordering Number No.	Orifice in. (mm)	End Connections		Dimensions in. (mm)							
		Process	Instrument	A	B	C	D	E	F	G	H
SS-TM3V-8NF	0.157 (4.0)	1/2″ FEMALE NPT		9.0 (228.8)	1.69 (43)	3.38 (86)	0.31 (7.85)	1.88 (47.8)	2.5 (63.5)	4.12 (104.7)	1.31 (33.34)

DIRECT MOUNTING TYPE

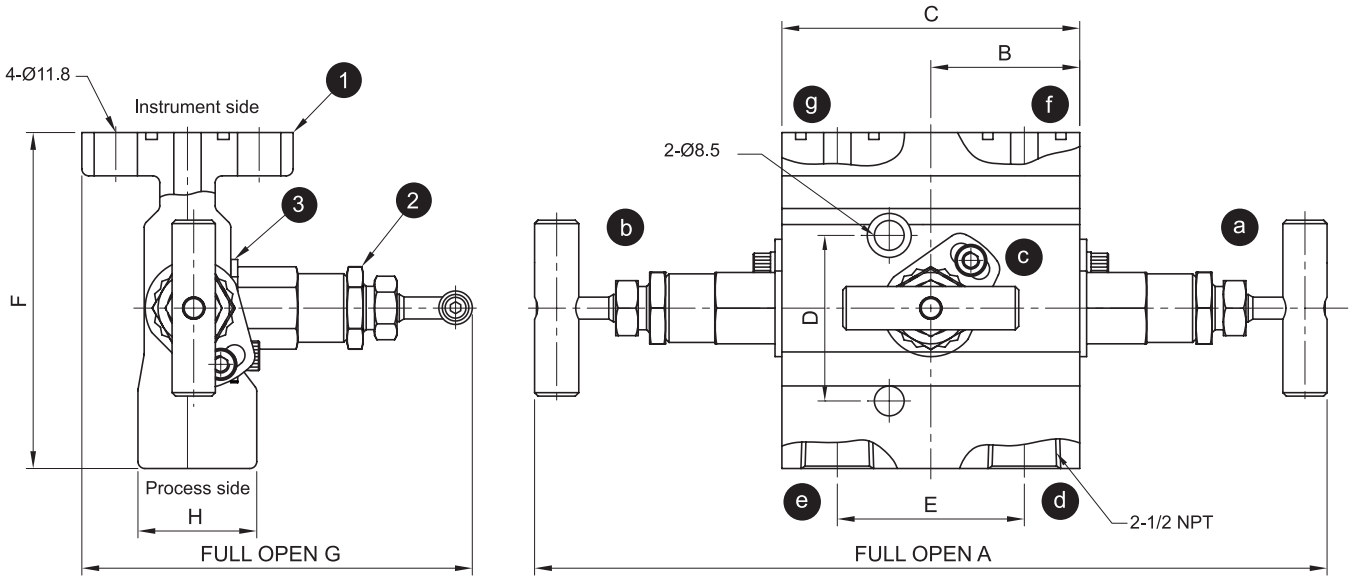

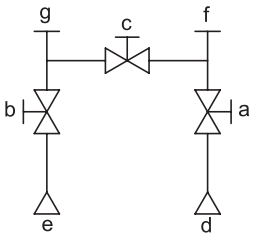

MATERIALS OF CONSTRUCTION

No.	Description	Material Material Grade / ASTM Specification
1	BODY	316 SS / A479
2	LARGE BONNET VALVE	See Technical Data
3	LOCK PLATE	304 SS

DIMENSIONS

Ordering Number No.	Orifice in. (mm)	End Connections		Dimensions in. (mm)							
		Process	Instrument	A	B	C	D	E	F	G	H
SS-TM3V1F-8NF	0.157 (4.0)	1/2″ FEMALE NPT	FLANGE (MSS)	8.99 (228.5)	2.153 (54.7)	3.37 (85.7)	1.88 (47.8)	2.13 (54)	3.76 (95.5)	4.49 (114.1)	1.33 (33.8)

5-VALVE MANIFOLD

REMOTE MOUNTING TYPE

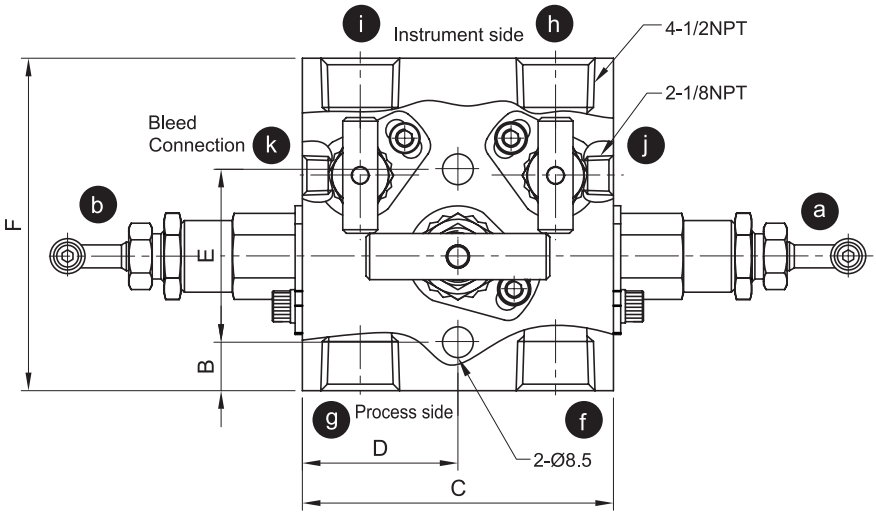

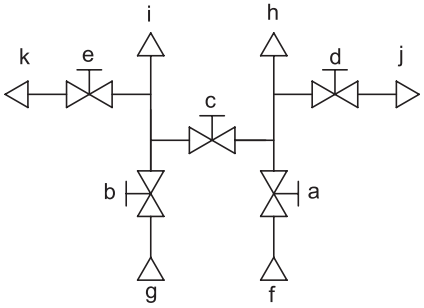

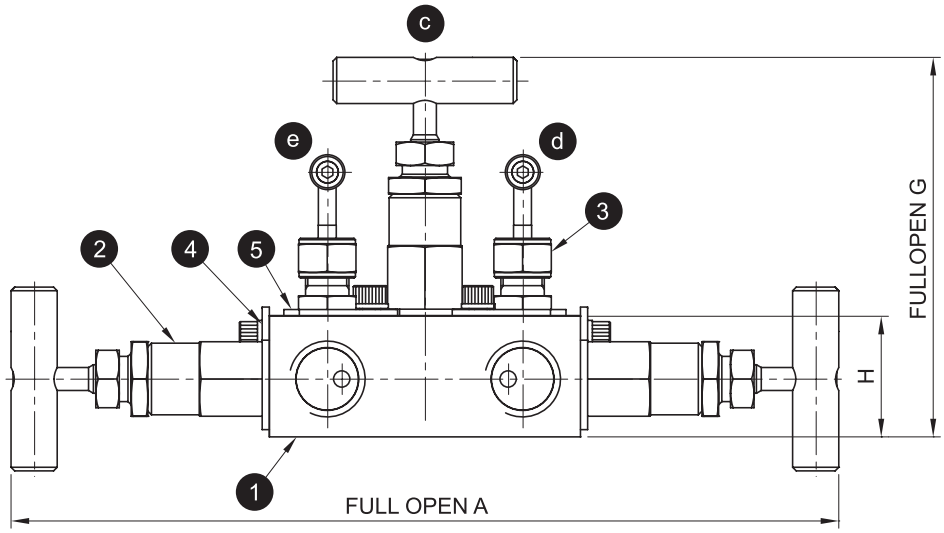

MATERIALS OF CONSTRUCTION

No.	Description	Material Material Grade / ASTM Specification
1	BODY	316 SS / A479
2	LARGE BONNET VALVE	See Technical Data
3	SMALL BONNET VALVE	See Technical Data
4	LOCK PLATE	304 SS
5	LOCK PLATE	304 SS

DIMENSIONS

Ordering Number No.	Orifice in. (mm)	End Connections			Dimensions in. (mm)							
		Process	Instrument	Bleed	A	B	C	D	E	F	G	H
SS-TM5V-8NF	0.157 (4.0)	1/2″ FEMALE NPT		1/4” FEMALE NPT	8.99 (228.5)	0.52 (13.4)	3.37 (85.7)	1.687 (42.85)	1.88 (47.8)	3.62 (91.9)	4.12 (104.7)	1.31 (33.3)

DIRECT MOUNTING TYPE

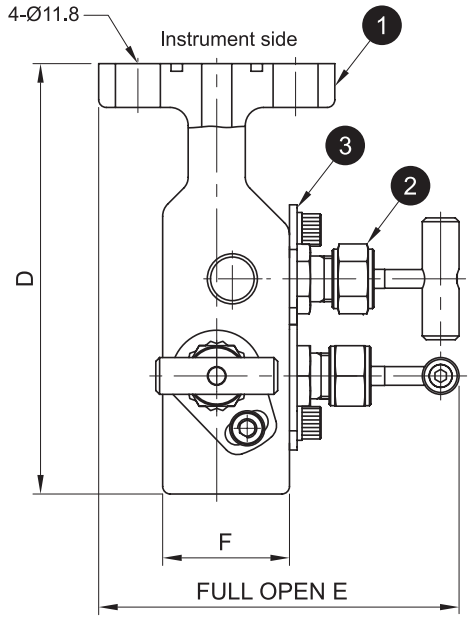

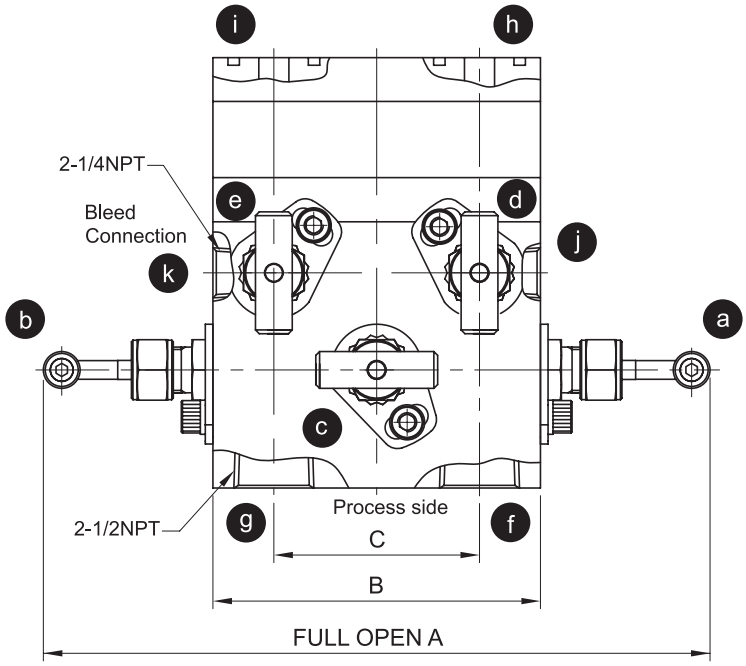

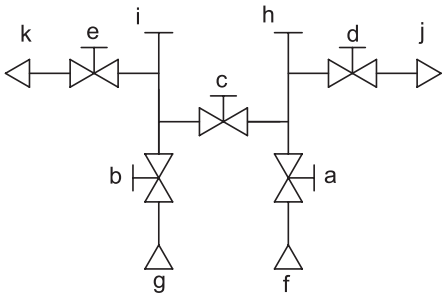

MATERIALS OF CONSTRUCTION

No.	Description	Material Material Grade / ASTM Specification
1	BODY	316 SS / A479
2	SMALL BONNET VALVE	See Technical Data
3	LOCK PLATE	304 SS

DIMENSIONS

Ordering Number No.	Orifice in. (mm)	End Connections			Dimensions in. (mm)					
		Process	Instrument	Bleed	A	B	C	D	E	F
SS-TM5V1F-8NF	0.157 (4.0)	1/2" FEMALE NPT	Flange(MSS)	1/4" FEMALE NPT	8.99 (228.5)	3.37 (85.7)	2.13 (54)	4.45 (113)	3.75 (95.3)	1.31 (33.3)

Gauge Valves

TGAV SERIES

- Maximum Working Pressure : 6,000 psig (413 bar) @ 100˚F (37˚C)
- Working Temperature Range

  PTFE Packing : -65˚F (-53˚C) to 450˚F (232˚C)

  Grafoil Packing : -65˚F (-53˚C) to 1,200˚F (648˚C)

TK-FUJIKIN CORPORATION
Fujikin Corp. Group

ORDERING INFORMATION

SS	—	TGAV	—	8NMX8NF	—	G	—	V
1		2		3		4		5

1. BODY MATERIAL

Material	Designator
316 SS	SS

2. VALVE SERIES

Orifice Size	Designator
4.2mm	TGAV → No Port Type
	TGARV
	TGARLV

* The Orifice Size is defermined using valves with TKF tube fitting end connections.
* For more details, See the Dimensions Table.

3. INLET/OUTLET CONNECTION SIZE & TYPE

Inlet/Outlet Connection Size	Designator
1/2"	8
3/4"	12

Inlet/Outlet Connection Type	Designator
Male NPT	NM
Female NPT	NF

4. PACKING MATERIAL

Packing Material	Designator
PTFE(Standard)	Blank
Grafoil	G

5. STEM TYPE

Stem Type	Designator
Ball Stem	Blank
Vee Stem	V

FEATURES

- Multi port design
- 1/2” Female gauge ports standard
- Bonnet lock plate standard

TECHNICAL DATA

TEMPERATURE - WORKING PRESSURE RATING

Body Material	316 SS	
Packing Material	PTFE	Grafoil
Temperature, °F (°C)	Working Pressure, psig (bar)	
-65 (-53) to 100 (37)	6,000 (413)	6,000 (413)
200 (93)	5,160 (355)	5,160 (355)
250 (121)	4,910 (338)	4,910 (338)
300 (148)	4,660 (321)	4,660 (321)
350 (176)	4,470 (307)	4,470 (307)
400 (204)	4,280 (294)	4,280 (294)
450 (232)	4,130 (284)	4,130 (284)
500 (260)	-	3,980 (274)
550 (288)	-	3,870 (266)
600 (315)	-	3,760 (259)
650 (343)	-	3,700 (254)
700 (371)	-	3,600 (248)
750 (398)	-	3,520 (242)
800 (426)	-	3,460 (238)
850 (454)	-	3,380 (232)
900 (482)	-	3,280 (225)
950 (510)	-	3,220 (221)
1,000 (537)	-	3,030 (208)
1,050 (565)	-	3,000 (206)
1,100 (593)	-	2,685 (184)
1,150 (621)	-	2,285 (157)
1,200 (648)	-	1,715 (118)

* 450˚F (232˚C) with standard PTFE packing.
* 1,200˚F (648˚C) with optional Grafoil packing.

TESTING

- For, leakage, Each valve is tested with nitrogen at 1,000psig (69bar)
  The leakage shall not exceed 0.1 std cc/min (Max. 0.1 std cc/min)

PACKING ADJUSTMENT

- Every valve is cleaned and packaged in accordance with the standard specification of cleaning and packaging.

MATERIALS OF CONSTRUCTION

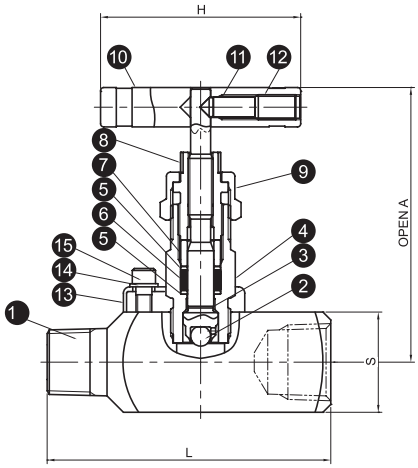

TGAV SERIES

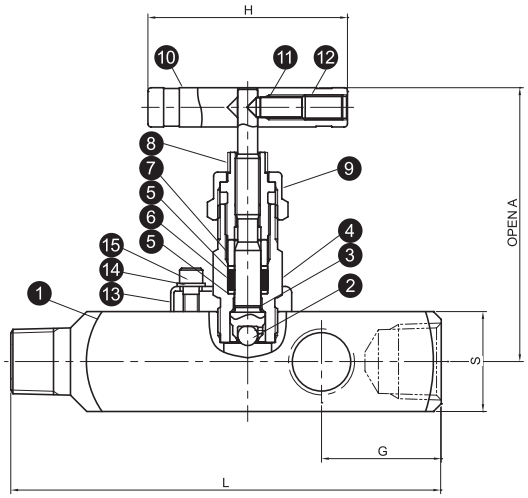

TGARV SERIES

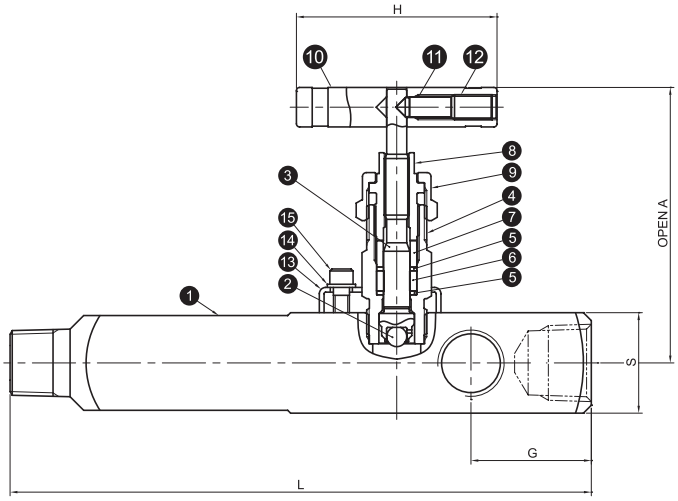

TGARLV SERIES

No.	Description	Material Material Grade/ASTM Specification
1	BODY	316 SS / A479
2	BALL TIP	316 SS / A276
3	STEM	316 SS / A276
4	BONNET	316 SS / A479
5	PACKING SUPPORT	PTFE (C:15%)
6	PACKING	PTFE
7	GLAND	316 SS / A276
8	PACKING BOLT	316 SS / A276
9	LOCK NUT	316 SS / A276
10	HANDLE	316 SS
11	PIN	316 SS
12	SET SCREW	304 SS
13	LOCK PLATE	304 SS
14	WASHER	304 SS
15	BOLT	304 SS

DIMENSIONS

Ordering Number	Orifice in. (mm)	End Connections		Dimensions in. (mm)				
		Inlet	Outlet	A	G	H	L	S
SS-TGAV-8NMX8NF	0.165 (4.2)	1/2" MALE NPT	1/2" FEMALE NPT	3.43 (87.2)	-	2.5 (63.5)	3.54 (90)	1.25 (31.8)
SS-TGAV-12NMX8NF		3/4" MALE NPT	1/2" FEMALE NPT	3.43 (87.2)	-	2.5 (63.5)	3.54 (90)	1.25 (31.8)
SS-TGAV-8NMX12NF		1/2" MALE NPT	3/4" FEMALE NPT	3.43 (87.2)	-	2.5 (63.5)	3.54 (90)	1.25 (31.8)
SS-TGAV-8NF		1/2" FEMALE	1/2" FEMALE NPT	3.43 (87.2)	-	2.5 (63.5)	3.3 (84)	1.25 (31.8)
SS-TGARV-8NMX8NF		1/2" MALE NPT	1/2" FEMALE NPT	3.43 (87.2)	1.5 (38.1)	2.5 (63.5)	5.39 (137)	1.25 (31.8)
SS-TGARV-12NMX8NF		3/4" MALE NPT	1/2" FEMALE NPT	3.43 (87.2)	1.5 (38.1)	2.5 (63.5)	5.39 (137)	1.25 (31.8)
SS-TGARV-8NMX12NF		1/2" MALE NPT	3/4" FEMALE NPT	3.43 (87.2)	1.5 (38.1)	2.5 (63.5)	5.39 (137)	1.25 (31.8)
SS-TGARV-8NF		1/2" FEMALE	1/2" FEMALE NPT	3.43 (87.2)	1.5 (38.1)	2.5 (63.5)	4.29 (109)	1.25 (31.8)
SS-TGARLV-8NMX8NF		1/2" MALE NPT	1/2" FEMALE NPT	3.43 (87.2)	1.5 (38.1)	2.5 (63.5)	7.24 (184)	1.25 (31.8)

Water Regulator

WRG SERIES

- Maximum Working Pressure : 142 psig (10kgf/cm)
- Adjustable Pressure : 17 psig (1kgf/cm) to 85 psig (6kgf/cm)
- Working Temperature Range : 32˚F (0˚C) to 176˚F (80˚C)

TK-FUJIKIN CORPORATION
Fujikin Corp. Group

ORDERING INFORMATION

B	8	WRG	—	PTF	—	1
1	2	3		4		5

1. BODY MATERIAL

Material	Designator
C3771	B

2. CONNECTION SIZE

Size	Designator
1/2"	8
3/4"	12
1"	16
2"	32

3. SERIES - WRG SERIES

4. INLET / OUTLET CONNECTION TYPE

Type	Designator
FEMALE PT	PTF

5. PRESSURE GAUGE

Type	Designator
10K GAUGE	1

FEATURES

- Simple structure.
- High durability.
- Large exhaust, even small size.
- Providing excellent control by easy handle operation.
- Designed to prevent gauge damage by Water Hammer.

DIMENSIONS

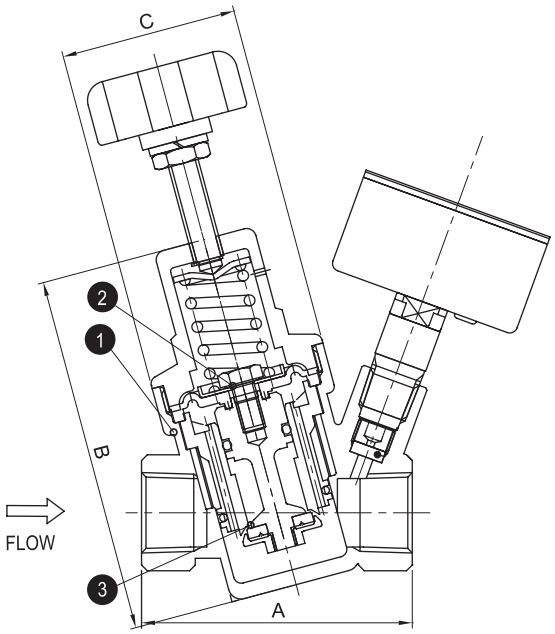

TEMPERATURE - WORKING PRESSURE RATING

No.	Description	Material
1	BODY	C3771(Ni Coating)
2	DIAPHRAGM	NBR
3	SEAT	NBR

CONNECTION SIZE	Dimensions		
	A	B	C
1/2"	70.5	93	Ø46
3/4"	46	93	Ø46
1"	106	139.2	Ø69
2"	130	139.2	Ø69

Condensate Pot

CP SERIES

- T-LOK ended outlets
- Simple maintenance design
- Variety of connections available

TK-FUJIKIN CORPORATION
Fujikin Carp Group

ORDERING INFORMATION

SS	–	CP	3	S40	–	3A	–	8A2CF
1			2	3		4		5

1. MATERIAL

Material	Designator
A312 TP316	SS
A312 TP316L	S
A312 TP304	4S
A312 TP304L	4L
A106 Gr. B	CB
A335 P11	P11
A335 P22	P22

2. PIPE DESIGNATOR

Pipe Size		Designator
ANSI	NPS 3 (O.D. 88.9)	3
	NPS 4 (O.D. 114.3)	4
JIS	80A (O.D. 89.1)	J3
	100A (O.D. 114.3)	J4

3. CLASS DESIGNATOR OF PIPE

Pipe Size	Designator
Sch. 40	S40
Sch. 80	S80
Sch. 160	S160
Sch. XXS	XX

4. SHAPES DESIGNATOR

Shapes	Designator	Shapes	Designator	Shapes	Designator	Shapes	Designator
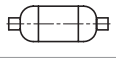	2A	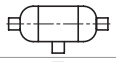	3A	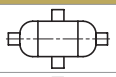	4A	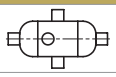	5A
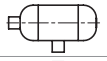	2B	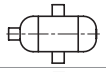	3B	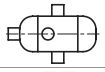	4B	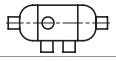	5B
	2C		3C		4C	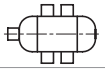	5C
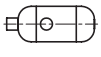	2D	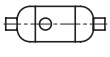	3D	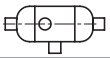	4D		5D
	2E	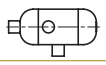	3E	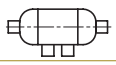	4E	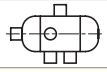	5E

* If you need other shapes except specified shapes above, please do not hesitate to contact.

5. END CONNECTION DESIGNATOR

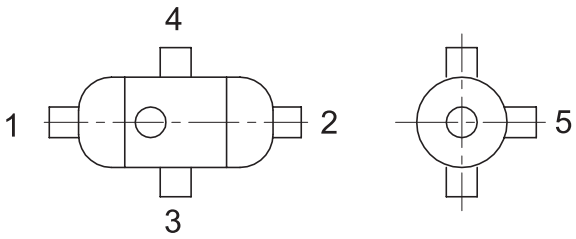

Size	Designator	Size	Designator
1/8	2	1/2	8
1/4	4	3/4	12
3/8	6	1	16

End Connection	Designator	End Connection	Designator
Female NPT	A	Hex. Head Plug	E
Female PT	B	T-LOK	F
Pipe Socket Weld	C	Vent Plug	G

* If all end connections are the same, size should be written only once.
* Class of end connection is sellected by the pipe schedule.
* Socket weld connection as per ANSI B16.11
* Butt welding ends as per ANSI B16.9
* NPT as per ANSI B1.20.1 taper pipe threads

FEATURES

All condensate pot are designed in accordance with ASME SEC. VIII Div. 1 and produced in an ASME coded workshop.

- Seamless pipe construction.
- Working pressure: up to Class 2500
- Variety of end connections available.
- Extra connections can be furnished upon custmer reguest.
- All threads will be protected with plugs or plastic caps as required by the custmer.
- All chamber are factory tested fully prior to shipment.

TECHNICAL DATA

- All welding as per ASME SEC. IX.
- All the welding point shall be non-destructive inspection.

* RT : Radiographic Testing
* PT : Liquid Penetrant Testing
* MT : Magnetic Particle Testing

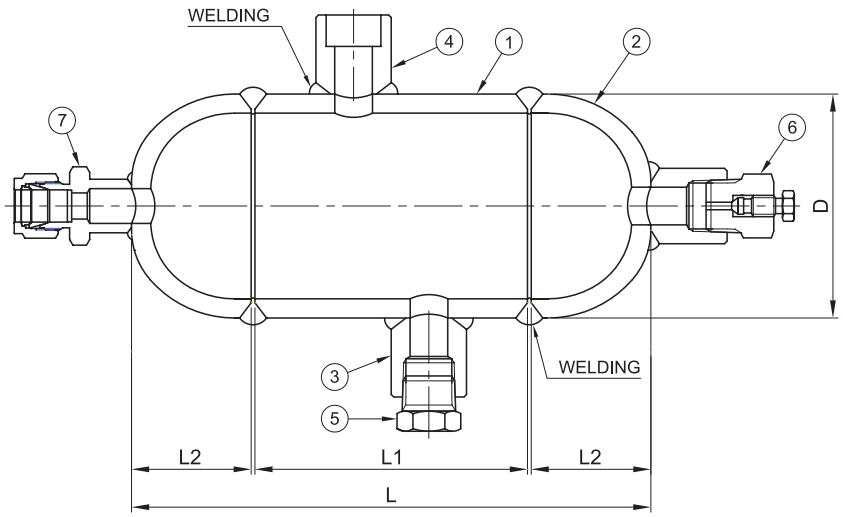

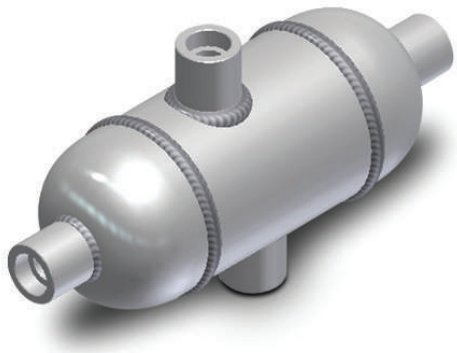

MATERIAL OF CONNECTION

No.	Description	Material
1	Pipe	Refer to Material Table
2	Cap	
3	Half Coupling	Stainless Steel 316/L or Carbon Steel
4	Weld Connector	Stainless Steel 316/L
5	Hex. Plug	Stainless Steel 316/L or Carbon Steel
6	Vent Plug	Stainless Steel 316/L
7	T-LOK	

DIMENSIONS

(Unit: mm)

Pipe Size D	L	L1 ①	L2 ②
NPS 3 (88.9)	214	110	50
NPS 4 (114.3)	360	229	63.5
80A (89.1)	214	110	50
100A (114.3)	360	229	63.5

① L1 length is adjustable according to client request
② L, L2 are changed according to L1.

MEMO

MEMO

TK-FUJIKIN

Ultra High Purity Products Company &
General Industrial Products Company

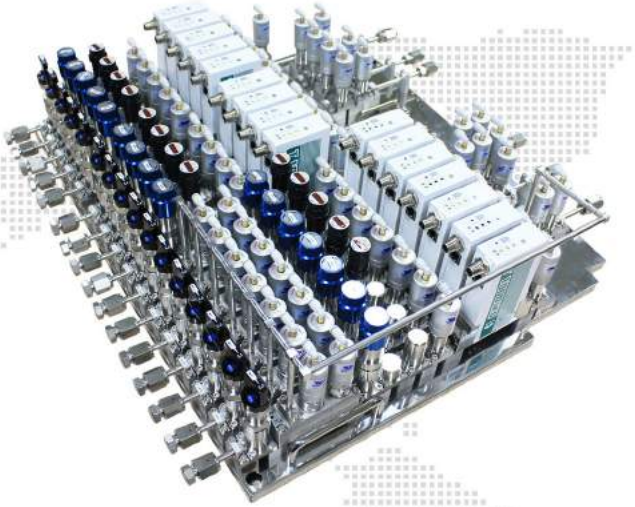

SEMICONDUCTOR HIGH PURITY PRODUCTS

- VALVE SERIES
- REGULATOR SERIES / MGC
- BALL VALVE SERIES
- WELD & METAL SEAL FITTINGS
- TUBE & PIPE FITTINGS
- GAS FILTERS
- IGS
- MFC
- PT SENSOR
- CANISTER

GENERAL INDUSTRIAL VALVES & FITTINGS

■ VALVE SERIES

ONE PICESE BALL VALVES
THREE PICESE BALL VALVES
HEX BALL VALVES
TRUNNION BALL VALVES
FORGED HIGH PRESSURE BALL VALVE
SWING-OUT BALL VALVES
HIGH PRESSURE BALL VALVES
INTEGRAL BONNET NEEDLE VALVES
UNION BONNET NEEDLE VALVES
CHECK VALVES
PLUG VALVES
MANIFOLD VALVES
GAUGE VALVES
REGULATORS
FLEXIBLE HOSES
DOUBLE BLOCK & BLEED VALVES
TOGGLE VALVES
RISING PLUG VALVES
RELIEF VALVES

■ FITTING SERIES

TUBE FITTINGS
THREAD FITTINGS
FORGED FITTINGS
BITE TYPE TUBE FITTINGS (DIN2353)
BITE TYPE TUBE FITTINGS (JIS B2351)
37° FLARED TUBE FITTINGS (SAE J514)
HOSE CONNECTORS & PUSH-ON HOSE FITTINGS

■ CONDENSATE POT

TK-FUJIKIN CORPORATION
Fujikin Carp Group

Head Office : 7, Noksansandan 261-ro 88beon-gil, Gangseo-gu, Busan, Korea
2nd Factory : 32, Hwajeonsandan 3-ro, Gangseo-gu, Busan, Korea
Suwon Office : #212, 102-Dong, 88, Sinwon-ro, Yeongtong-gu, Suwon-si, Gyeonggi-do, 443-734, Korea
TEL. 82-51-970-6700 FAX. 82-51-831-1215 www.tk-fujikin.com E-mail : htoc@tk-fujikin.com

Rev.3 2018. 03. 21